SNK SERIES TERMINAL BLOCKS

PI-Spring, screw clamp and pluggable technologies

ENTRELEC Terminal Blocks

The innovative SNK series is available in PI-Spring (Push-In and Spring), screw clamp and pluggable technologies with common accessories. Qualified for worldwide applications and severe environments such as hazardous locations, railways, marine and solar.

Summary_1

SNK series, terminal blocks

PI-Spring, screw clamp and pluggable technologies

Ranges and technologies presentation 2

PI-Spring terminal blocks 13

Screw clamp terminal blocks 71

Pluggable terminal blocks 161

Accessories 195

Marking solutions 237

Index 270

1-1773957-4_EN - Edition February 2019

ENTRELEC terminal blocks offering

TE Connectivity proposes one of the largest connection offering on the market with various technologies: screw, PI-Spring, spring, IDC, pluggable, stud, etc. technologies found in over 8000 products & solutions.

	SNK & SNA standard terminal blocks		Specific technologies		Terminal blocks for railway applications
					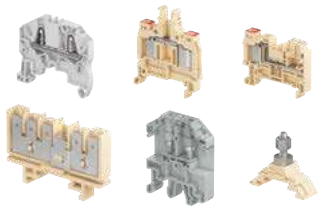
Scope	Qualified for worldwide applications and severe environments (such as hazardous locations, railways, marine and solar applications..). From 0.2 to 300 mm².		Specific terminal blocks and technologies for dedicated applications and markets.		The largest offering on the market for rolling stock and infrastructures.
Product families & functions	SNK PI-Spring technology 2.5 to 16 mm² 12 to 4 AWG	Feed-through Multi-deck Ground Disconnect for fuses Component holder	ADO System® (IDC) 0.22 to 4 mm² 24 to 12 AWG	ADO-ADO or ADO-screw clamp Feed-through / Multi-deck / Ground / Disconnect / for fuses / Component holder	SNK PI-Spring technology 2.5 to 16 mm² 12 to 4 AWG
			Safety (spring loaded) 0.22 to 10 mm² 24 to 6 AWG	Feed-through Disconnect Test & measurement	SNK pluggable screw & PI-Spring technologies 2.5 to 4 mm² 12 to 10 AWG
	SNK screw clamp technology 4 to 240 mm² 12 to 500 Kcmil	Feed-through Multi-deck Ground Disconnect for fuses Test & measurement Marshalling Component holder	Stud 25 to 120 mm² 2 AWG to 500 Kcmil	One stud 2 studs One stud - One wire-clamp	ADO System® (IDC) 1.5 to 4 mm² 16 to 12 AWG
			Ring lug 2.5 to 25 mm² 14 to 4 AWG	Feed-through Test & measurement	Stud 4 to 185 mm²
	SNK pluggable screw & PI-Spring technologies 2.5 to 4 mm² 12 to 10 AWG	Feed-through Multi-deck Ground	Miniblocks 1.5 to 6 mm² 18 to 8 AWG	Screw clamp Spring ADO System® (IDC)	Quick-connect 2.5 to 6 mm²
	SNA Stud 35 to 300 mm² 1 AWG to 1000 Kcmil	Feed-through Stud-stud Hybrid Stud-screw	Other types Test & measurement: with sliding link, blade, plug Pluggable: feed-through, double deck, disconnect Sensors/actuators: screw, spring, ADO system (IDC) Installation: screw, spring Protection: ground + neutral Component holders: screw, spring, ADO system (IDC)		

www.te.com

	DBL power distribution blocks	ESSAILEC® test blocks	Interfast PLC pre-wiring system	Marking solutions
	The preferred choice for primary power distribution and solar applications.	Test blocks for safe and easy testing on secondary circuits of current and voltage transformers and sensors.	PLC pre-wiring system for fast, flexible, reliable connection of PLC's in process automation applications.	Markers & marking systems for all identification requirements in electrical panels.
	From 80 A up to 550 A (IEC) Modular blocks: single pole, three & four poles, up to 12 outputs Terminal blocks types: 2 to 10 poles, up to 20 outputs	Current and voltage sockets & plugs Simultaneous testing of 1 to 4 independent circuits on the same socket Several testing principle such as "make before break" for safe current transformer testing Panel and switchboard mounting : base, flush, rack, TH35 rail Multicircuits sockets & plugs	Interfast PCB: Compact & standard modules Interfast MS: Modular system based on terminal block technology Functions: – 1 to 4 wire connections (sensors) – Disconnect – Fuse – Signal indication – Relays – Optocouplers – Solenoid valve control – Galvanic isolation (2.5 kV).	Terminal block identification and group markers Wire and cable identification Component and equipment identification Panel identification Pre-printed markers for terminal blocks

1SNK160093S0201 - Rev. A

The innovative range available in PI-Spring (Push-In and Spring), screw clamp and pluggable technologies with common accessories.
Qualified for worldwide applications and severe environments such as hazardous locations, railways, marine and solar applications...

Speed up your projects

Smart connections, higher productivity
Up to 90% mounting time reduction with our PI-Spring, screw clamp and pluggable technologies.
Simplified selection and design
Intuitive codification, simplified catalogs, large technical data base.
Better project identification
20% larger marking area.
Pre-mark by hand or label before final marker installation.

Easy to install

Secured installation
Asymmetrical design avoid mounting and wiring errors.
Zero-retightening with our technologies.
Faster accessories mounting
Benefit from screwless ground connection, jumpers, end stops.
Smart design facilitating assembly process
Mounting, wiring, testing… made easy.

Optimized logistics

50% less accessories needed
End sections, circuit separators fit several blocks.
Common accessories
PI-Spring, screw and pluggable ranges share the same accessories.
Simplified inventory management
Significant reduction of part numbers to manage.

1SNK160093S0201 - Rev. A

PI-Spring technology
Two technologies in one connection

The patented design of TE Connectivity's PI-Spring can be used as a Push-in or traditional spring connection: Push-in and spring. The Push-in mode allows a direct one-step insertion of solid and flexible stranded wires with a ferrule, 50% faster than standard screw clamp technology.

Using the spring mode, very little effort is required to open the spring clamp with a screwdriver and insert the wire, which does not need a ferrule. The screwdriver locks in the terminal block after insertion, freeing up hands to manipulate wires or circuit drawings.

1

Features

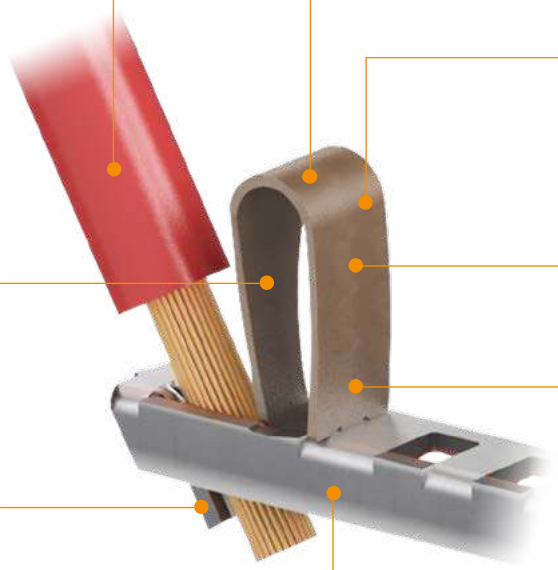

All certification testing performed with non prepared wires, ensuring perfect connections with or without ferrules

Connection elasticity and design strictly controlled to ensure an easy and safe insertion of both conductor and screwdriver

The PI-Spring technology has successfully passed aging tests (30 days temperature rise test and 14 days heat cycling test) guaranteeing the perfect long-term contact quality of our screwless technology

Flat surface of the PI-Spring makes wire and screwdriver insertion smoother and easier

Excellent pulling strength exceeding IEC standard requirements

Dimensions, coating and shape of the linking bar designed to get the lowest and most stable electrical contact value

Stainless steel PI-Spring for high corrosion resistance up to 1,000 hours salt mist resistance

Very good electrical contact even in applications where vibration and shock are an issue, such as railway

From 0.2 mm² up to 16 mm²
From 26 AWG up to 4 AWG

1SNK162052S0201 - Rev. A

Screw clamp technology
The heavy duty connection

Unique design, flies over time thanks to its reliability and safety
The TE Connectivity screw clamp technology is designed to avoids accidental releases due to vibrations, shocks or even abusive cable draw.

High density capacity
The screw clamp technology can fit up to two conductors per clamp which offers extended possibilities in electrical cabinets.

1

Features

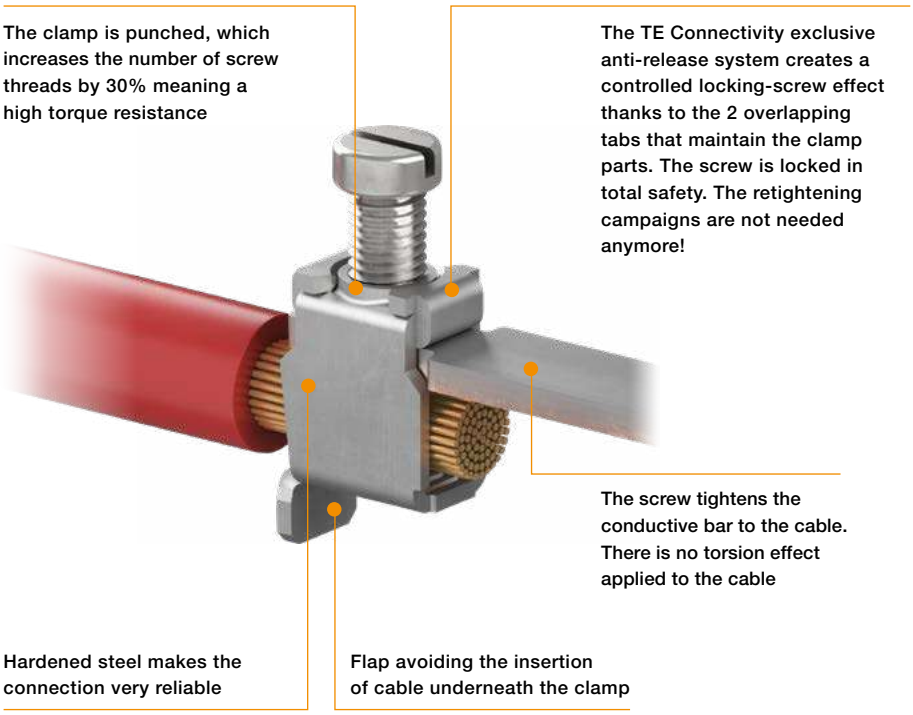

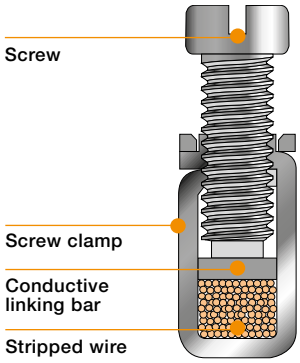

From 0.2 mm² up to 240 mm²
From 24 AWG up to 500 Kcmil

1SNK161087S0201 - Rev. A

Pluggable technology

The pluggable technology allows "plug and play" connection. It enables productivity savings, wiring optimization thanks to serialized pre-wired plugs harnesses, as well as secured final commissioning.

1

Features

The TE Connectivity plug is the most compact on the market thanks to the punched U-shaped linking bar allowing direct conductor contact.
TE Connectivity Patented design!

The lyres are made of copper alloy in order to offer maximized mechanical elasticity resistance
(superior to 50 matings/unmatings)

The TE Connectivity pluggable terminal blocks have successfully performed the marine environmental tests and meet the most severe rolling stock requirements in 3 axis vibrations and shock resistance (for PI-Spring pluggable terminal blocks versions)

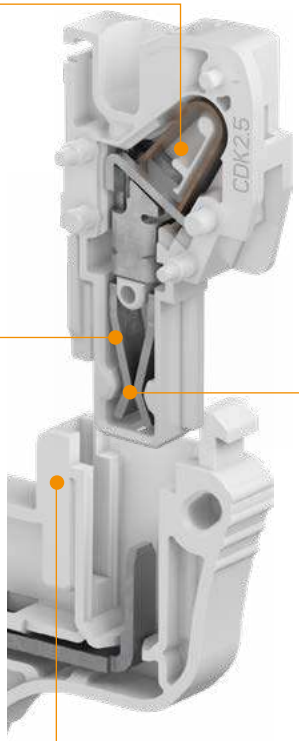

The chamfer shape guarantees auto-centering and mechanical integrity of the plug when inserted into the pluggable terminal block

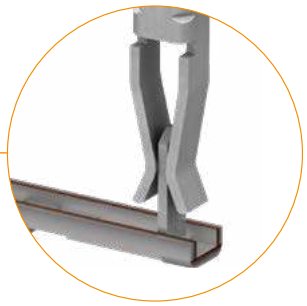

From 0.2 mm² up to 4 mm²

From 26 AWG up to 10 AWG

1SNK164011S0201

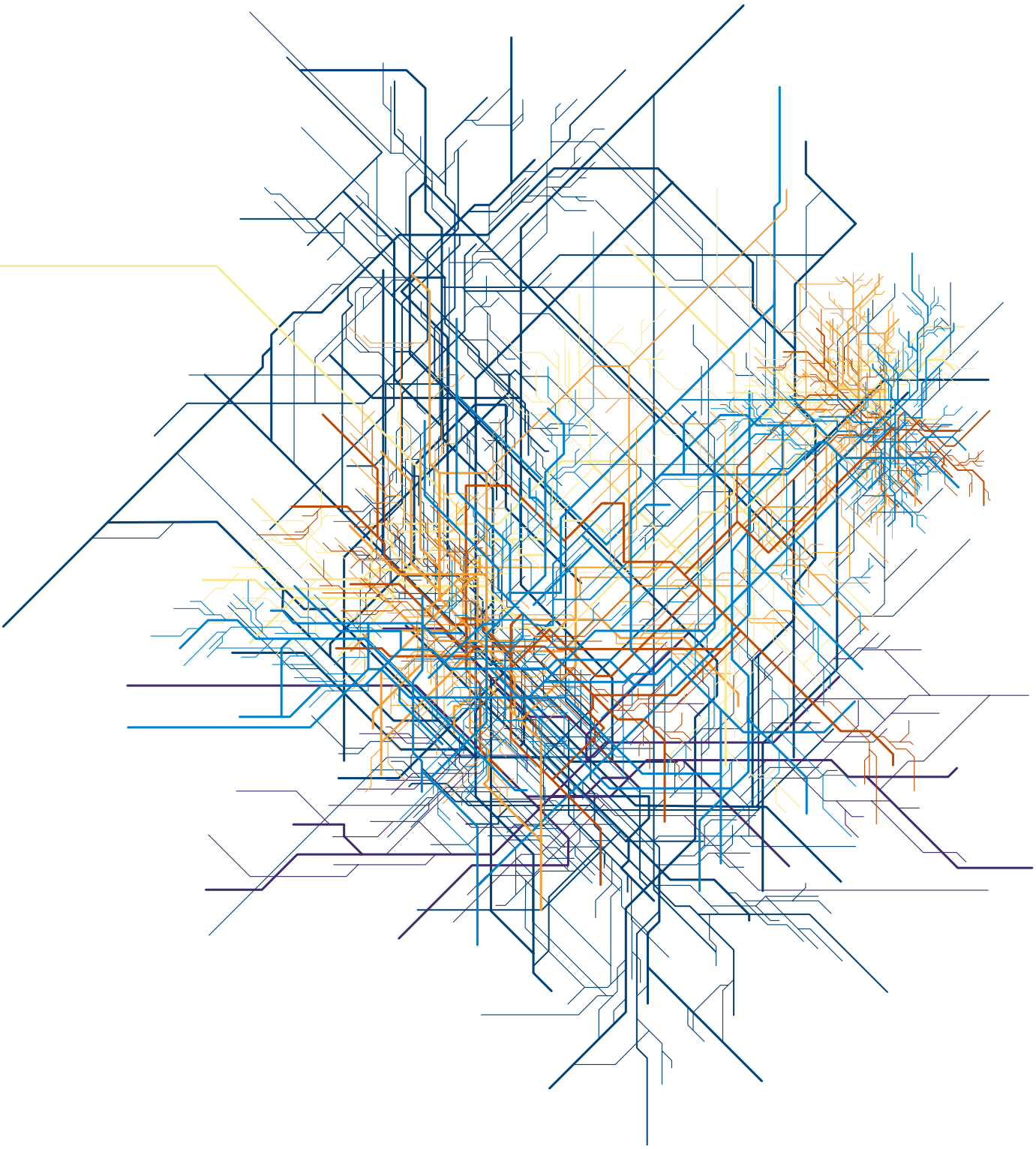

PB

Qualified for worldwide markets, applications
and for severe environments: vibration, shock, corrosion…

Industry and Commercial

SNK series, terminal blocks can be used worldwide in all types of industrial and commercial applications. All our products have CB, UL and CSA third party certificates delivered by independent laboratories. SNK series products are developed and qualified in accordance with the following international standards:
IEC 60947-1, IEC 60947-7-1, IEC 60947-7-2, IEC 60947-7-3, UL 1059, CSA C22.2 n°158-10.

RoHS

Solar

Thanks to their high voltage rating (up to 1500 VDC per IEC 60947-7-1 and 1000 VDC per UL 1059), SNK terminal blocks are ideally suited for use in solar equipment.

Waste and Water

SNK terminal blocks are well adapted to harsh environment conditions such as waste and water applications.
They have successfully passed the salt mist test in accordance with IEC 60068-2-11 (PI-Spring withstand up to >1000 h).
SNK terminal blocks are also compliant with flowing mixed gas corrosion test per IEC 60068-2-60 (test duration: 21 days).

1SNK160082S0201 - Rev. A

Railways

All SNK series products are suited to track-side fixed equipment.
For the more demanding environment of rolling stock applications, PI-Spring has been successfully tested in accordance with IEC 61373 requirements to resist high vibration and shock conditions (multi-axial waves, acceleration…).
The plastic material used is compliant with the flammability, smoke toxicity and opacity severe requirements of the traction segment and can be classified I2F2 per
NF F 16-101 and NF F 16-102 standards;
HL3 R22 per EN 45 545 standard and V0 per UL94 standard.
It complies with NFPA 130 per ASTM E 162 and ASTM E 662 standards tests and with FR238.103 and BSS 7239 standards.
The IRIS certificate guarantees the respect of international railway industry requirements.

Hazardous locations

SNK series is certified IEC Ex in accordance with IEC 60079-0 and IEC 60079-7 (increased safety "Exe") world international standards for products used in explosive atmospheres.
In order to serve specific local market requirements, some SNK products have additional local certifications such as: ATEX, UL hazardous Locations…
SNK products have successfully passed toughest tests like the thermal endurance test: 2 weeks in hot environment at 95 °C (+90% RH) followed by
2 weeks at 125 °C and one day cold environment test (-65 °C).
This proves the high mechanical performances of the SNK products.

Marine

SNK products have proven their performance by successfully passing tests required for the most extreme conditions. (eg: salt mist, damp or dry heat and cold environments) per IEC 60068 standards.

In order to serve the worldwide marine markets requirements, SNK products have the following Marine certifications: BV Marine, DNV, RINA, RMRS.

1

1SNK160082S0201 - Rev. A

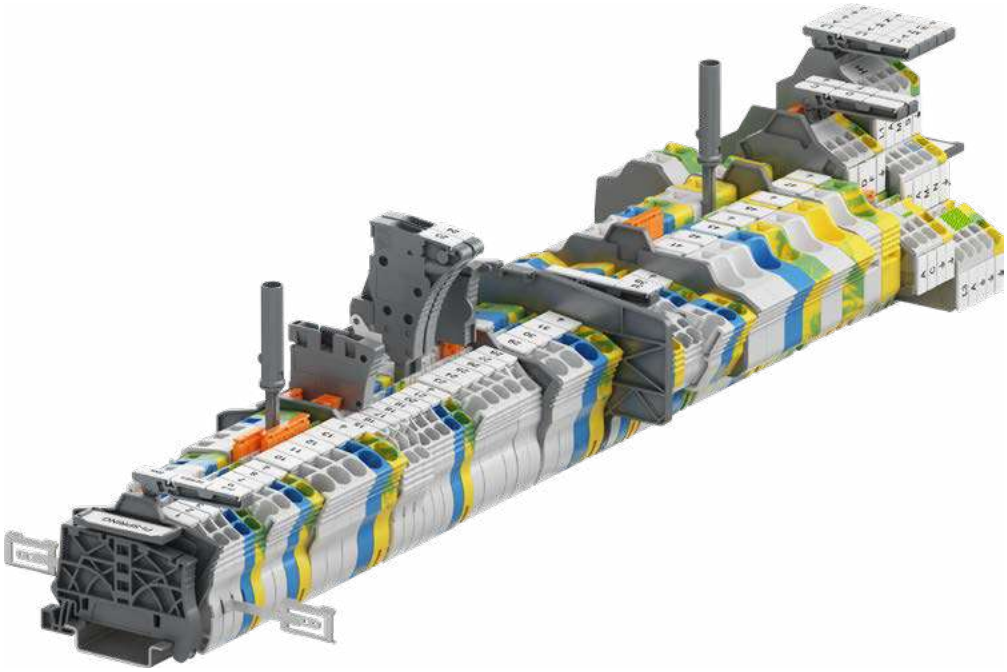

SNK series, terminal blocks
PI-Spring technology

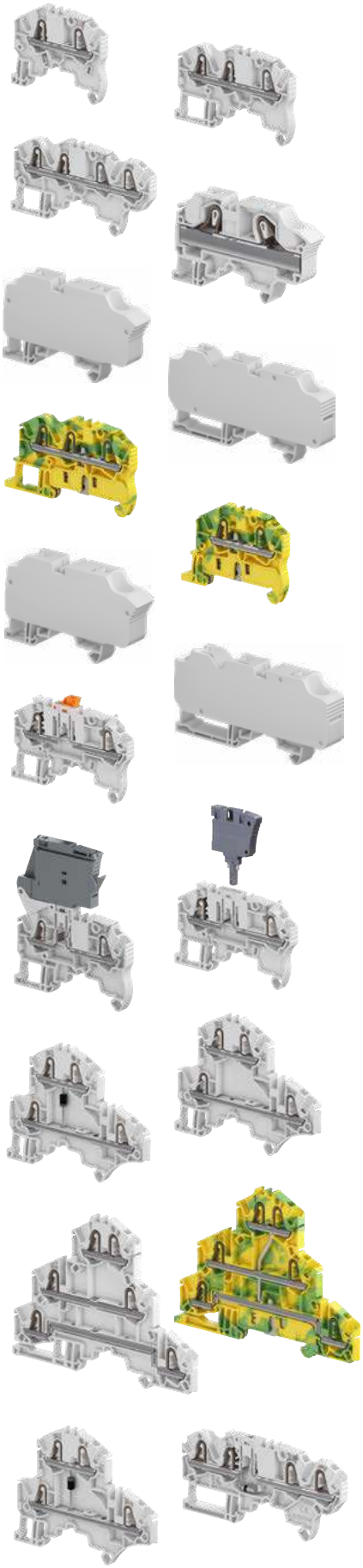

Technologies presentation			14
Overview			20
Feed-through			
2.5 mm² / 12 AWG	**ZK2.5**		21
	ZK2.5-3P	with 3 connections	22
	ZK2.5-4P	with 4 connections	23
4 mm² / 10 AWG	**ZK4**		24
	ZK4-3P	with 3 connections	25
	ZK4-4P	with 4 connections	26
6 mm² / 8 AWG	**ZK6**		27
	ZK6-3P	with 3 connections	28
10 mm² / 6 AWG	**ZK10**		29
	ZK10-PV		30
	ZK10-3P	with 3 connections	31
	ZK10-3P-PV	with 3 connections	32
16 mm² / 4 AWG	**ZK16**		33
	ZK16-PV		34
	ZK16-3P	with 3 connections	35
	ZK16-3P-PV	with 3 connections	36
Ground			
2.5 mm² / 12 AWG	**ZK2.5-PE**		37
	ZK2.5-PE-3P	with 3 connections	38
	ZP2.5-PE-4P	with 4 connections	39
4 mm² / 10 AWG	**ZK4-PE**		40
	ZK4-PE-3P	with 3 connections	41
	ZK4-PE-4P	with 4 connections	42
6 mm² / 8 AWG	**ZK6-PE**		43
	ZK6-PE-3P	with 3 connections	44
10 mm² / 6 AWG	**ZK10-PE**		45
	ZK10-PE-3P	with 3 connections	46
16 mm² / 4 AWG	**ZK16-PE**		47
	ZK16-PE-3P	with 3 connections	48
Disconnect with blade			
2.5 mm² / 12 AWG	**ZK2.5-S**	with test sockets	49
	ZK2.5-S-4P	with test sockets	50
	ZK2.5-S-R1		51
Disconnect with plug			
2.5 mm² / 12 AWG	**ZK2.5-SP**	with test sockets	52
	ZK2.5-SP-4P	with test sockets	53
For 5x20 fuses			
2.5 mm² / 12 AWG	**ZK2.5-SF**		54
	ZK2.5-SF-R	with blown fuse indicator	55
Double deck			
2.5 mm² / 12 AWG	**ZK2.5-D2**	2 feed-through circuits	56
	ZK2.5-D1	1 feed-through circuit	57
	ZK2.5-D2-PE	1 feed-through circuit and 1 ground circuit	58
	ZK2.5-D1-PE	1 ground circuit	59
Triple deck			
2.5 mm² / 12 AWG	**ZK2.5-T3**	3 feed-through circuits	60
	ZK2.5-T1	1 feed-through circuit	61
	ZK2.5-L-L-PE		62
	ZK2.5-L-N-PE	2 feed-through circuits and 1 ground circuit	63
	ZK2.5-T1-PE	1 ground circuit	64
Component holder			
2.5 mm² / 12 AWG	**ZK2.5-CH-4P-LR**		65
	ZK2.5-CH-4P-RL		66
	ZK2.5-D-CH-UD		67
	ZK2.5-D-CH-DU		68
	ZK2.5-D-CH2-DU-RL		69

The patented PI-Spring technology provides the benefits of both Push-In and Spring technologies in one connection

Speed up your projects

50% faster connection time with Push-in mode

Our Push-in connection technology allows:
A direct one step insertion with rigid and prepared flexible conductors.
Easy and quick insertion of the prepared flexible conductor or rigid conductor.

Reduced effort and conductor preparation time with spring mode

- Our connection requires minimal effort to insert wires with the screwdriver
- Flexible conductors preparation is not necessary.
- The screwdriver locks onto terminal freeing up hands.

Better project identification

- Circuit identification is improved thanks to the 20% larger marking area
- Pre-mark by hand or with label on our flat marking surface and start immediately the wiring, before the final markers mounting
- Spare markers re-printing in case of modifications.

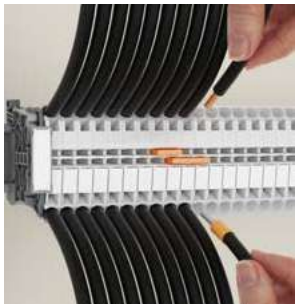

Push-in mode

Spring mode

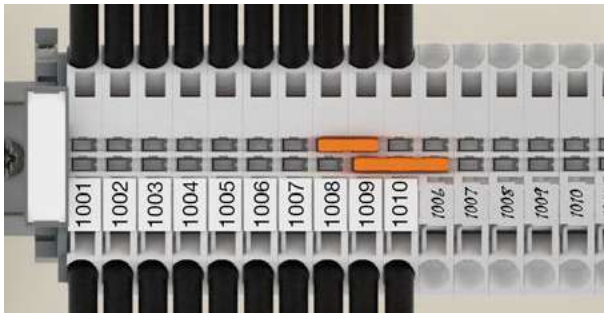

Clear circuit identification

1SNK162074S0201

Easy to install

Smart design facilitating assembly process

Mounting, wiring, testing… made easy

Avoid mounting and wiring errors: asymmetrical design allows immediate visual check in case of reversed terminal blocks.

Asymmetrical design avoids mounting error

Faster accessories mounting

Save up to 70% mounting time thanks to :

- screwless jumpers, component plugs, test devices, end stops and snap-in ground terminal blocks.

Screwless accessories

Snap-in ground terminal blocks

Closed jumper location allows great stiffness of the terminal block, avoid deflection while tightening and optimal jumper guiding.

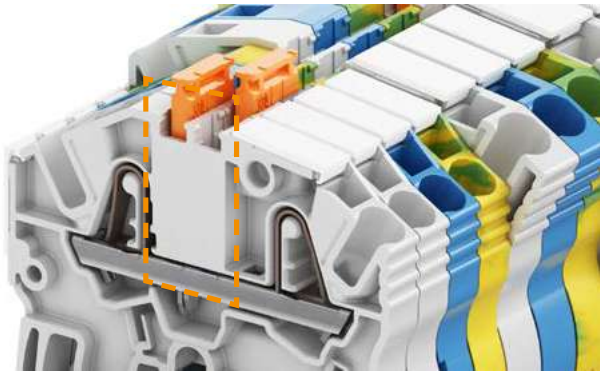

Closed jumper location for stiffness.

1SNK162074S0201

Easy to install

Smart accessories

Flexible test solutions from individual insulated test adapter to test connectors for complete assemblies testing.

- Direct plug-in into jumpers channels
- 5, 6, 8 mm spacing, mixing various spacing is possible
- 1000 V rating.

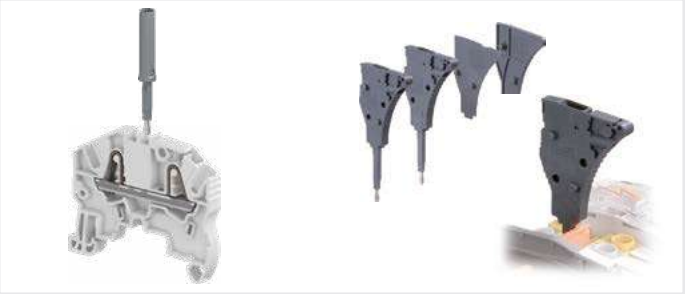

Plug-in individual test adapter. Plug-in test connector.

Component holder plugs for series or parallel component mounting (resistors, filters, diodes..).
Can be installed after wiring.
Series plug offers screwless component connection (no soldering).

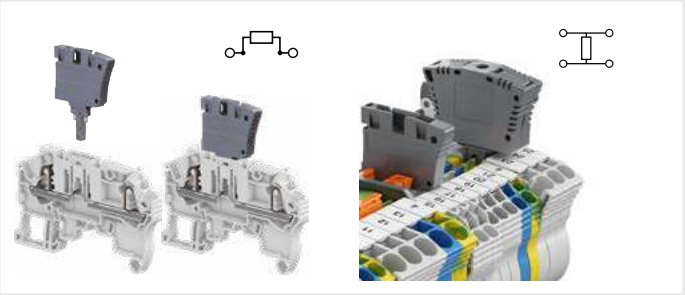

Series plug associated with disconnect blocks. Parallel plug to be installed between 2 blocks.

Smart plug-in jumpers:

Pre-cut poles removable by hand: clean cut.
Insulated up to 1000 V (avoid use of separators).
Predefined shapes in molding to easily identify connected poles with a pen.

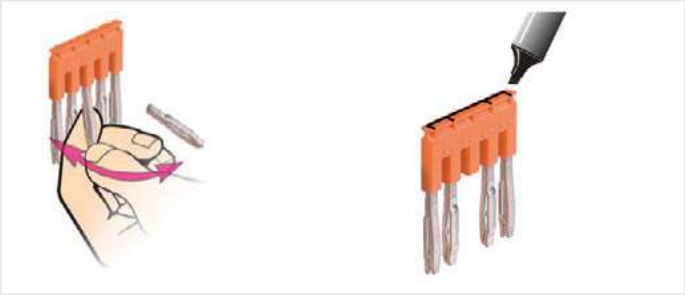

Pre-cut poles easy removable by hand. Predefined shape to identify connected poles.

1SNK162074S0201

Optimized logistics

Reduce your accessories inventory by up to 50%

SNK PI-Spring, screw and pluggable ranges share the same accessories.

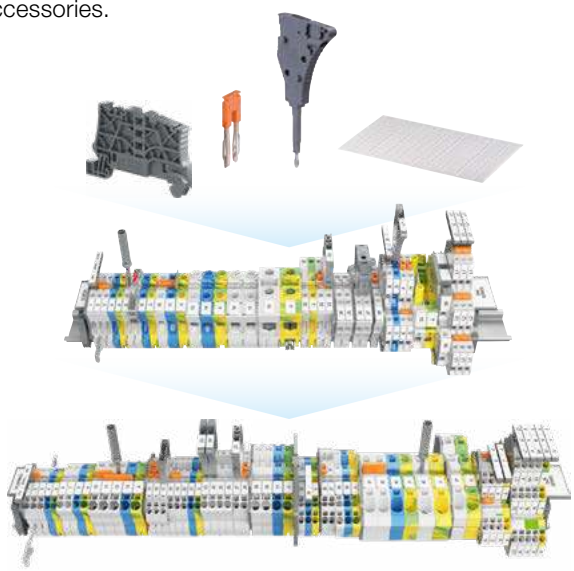

Shared accessories for SNK PI-Spring, screw and pluggable ranges

- All end sections and circuit separators fit several types and sizes of blocks
- One end section fits up to 21 models
- One circuit separator fits with 62 terminal blocks.

End sections and circuit separators fit several types and sizes of blocks

50% less inventory makes PI-Spring attractive to all worldwide markets

- The user selects one range but benefit from 2 connection modes (push-in and spring) which have global certifications and access to markets and applications worldwide
- Reduced packaging adapted to the usage (20 items packaging on some items).

Push-in range + Spring range

PI-Spring

Facilitate maintenance operations

Terminal blocks can be individually removed from a terminal assembly equipped with markers: TE Connectivity markers become independent after strip mounting. The markers remain on terminal in any situation.

Markers are interchangable: the smaller marker can fit any bigger block.

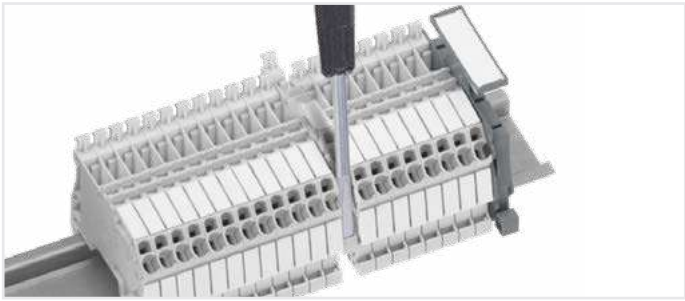

Maintenance operations facilitated

Reliable in harsh conditions

Qualified for worldwide markets, applications and for severe environments: vibration, shock, corrosion…

High corrosion resistance

PI-Spring clamp is made of high quality stainless steel.
Salt mist withstand up to 1,000 hours (as per IEC 60068).

1SNK162074S0201

2 Connections

Single deck
Feed-through
Ground
Disconnect
Fuse
Solar : 1500 VDC

NEW

3 Connections

Single deck
Feed-through
Ground
Solar: 1500 VDC

NEW

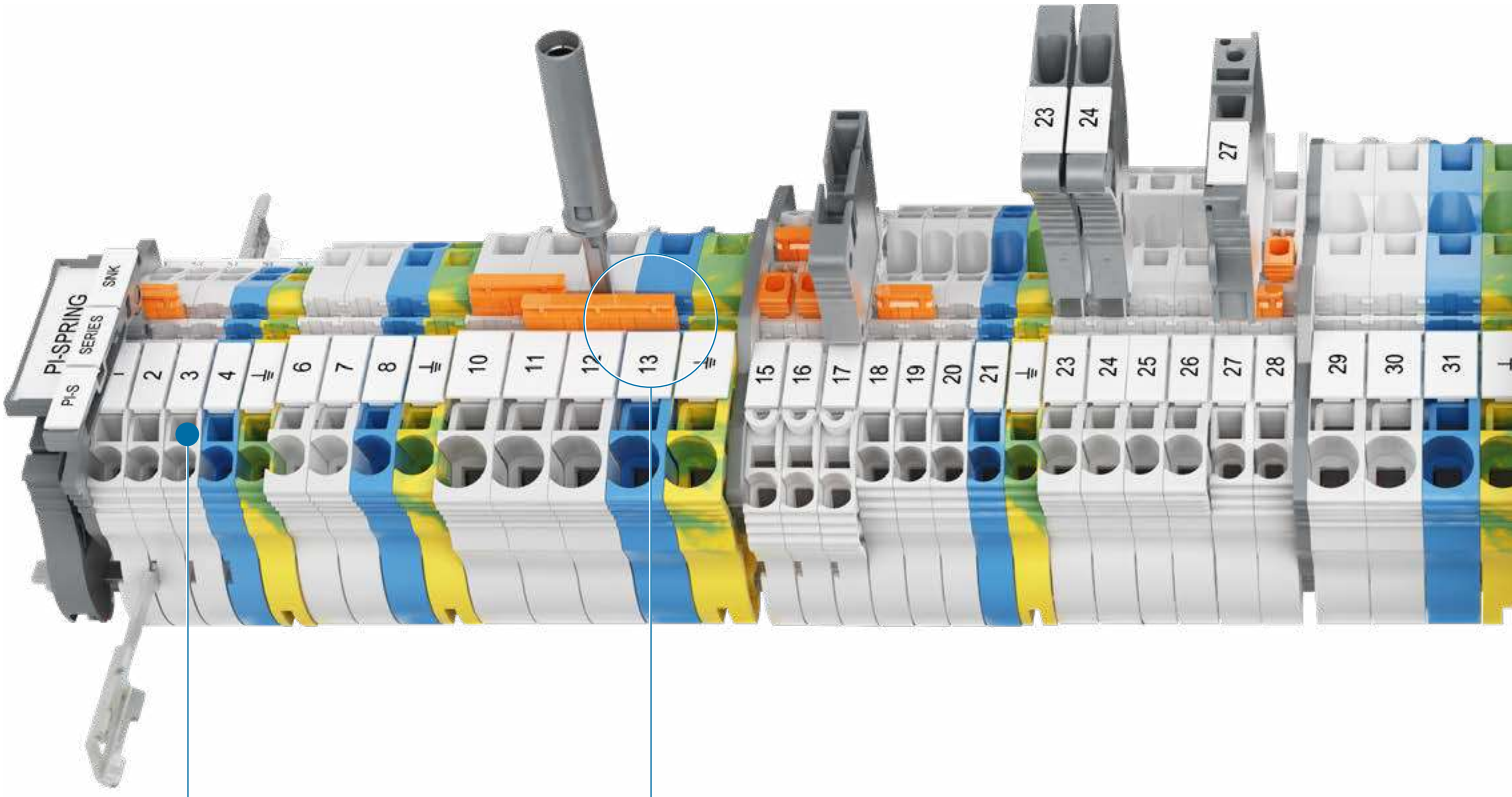

Voltage test
screwdriver entry point accepts Category II probes

Double central channels
allows multiconfigurations (jumpering, testing and measuring)

4 Connections

Single deck
Feed-through
Ground
Disconnect
Component holder

2x2 Connections

Double deck
Feed-through
Ground
Component holder

3x2 Connections

Triple deck
Feed-through
Ground

Two circuit separators
for the entire range

End section
can be used as circuit separator

Rotating label holder
easy plug-in in jumper channel

1SNK162068S0201 - Rév. A

Section		Feed-through			Ground			Component holder	
2.5 mm²	12 AWG	ZK2.5	ZK2.5-3P	ZK2.5-4P	ZK2.5-PE	ZK2.5-PE-3P	ZK2.5-PE 4P	ZK2.5-CH-4P-LR	ZK2.5-CH-4P-RL
4 mm²	10 AWG	ZK4	ZK4-3P	ZK4-4P	ZK4-PE	ZK4-PE-3P	ZK4-PE- 4P		
6 mm²	8 AWG	ZK6	ZK6-3P		ZK6-PE	ZK6-PE-3P			
10 mm²	6 AWG	ZK10	ZK10-3P		ZK10-PE	ZK10-PE-3P			
		ZK10-PV New	ZK10-3P-PV						
16 mm²	4 AWG	ZK16	ZK16-3P		ZK16-PE	ZK16-PE-3P			
		ZK16-PV New	ZK16-3P-PV						

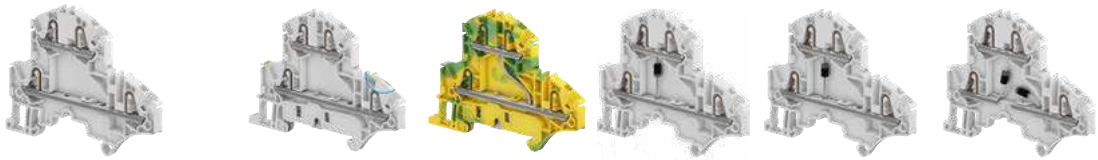

Double deck		Feed-through		Ground		Component holder		
Section								
2.5 mm²	12 AWG	ZK2.5-D2	ZK2.5-D1	ZK2.5-D2-PE	ZK2.5-D1-PE	ZK2.5-D-CH-UD	ZK2.5-D-CH-DU	ZK2.5-D-CH2-DU-RL

Triple deck		Feed-through		Ground	
Section					
2.5 mm²	12 AWG	ZK2.5-T3	ZK2.5-T1	ZK2.5-L-L-PE	ZK2.5-T1-PE
				ZK2.5-L-N-PE	

Disconnect		With blade		With plug		For 5x20 mm fuses		Aligned with ZK2.5-SF
Section								
2.5 mm²	12 AWG	ZK2.5-S	ZK2.5-S-4P	ZK2.5-SP	ZK2.5-SP-4P	ZK2.5-SF	ZK2.5-SF-R1	ZK2.5-S-R1
							ZK2.5-SF-R3	

Clamp - Channels for jumpering or testing - Test socket - Blown-fuse indicator

1SNK162020S0201 - Rev. B

ZK2.5 PI-Spring terminal blocks
Feed-through - 5.2 mm 0.205 in spacing

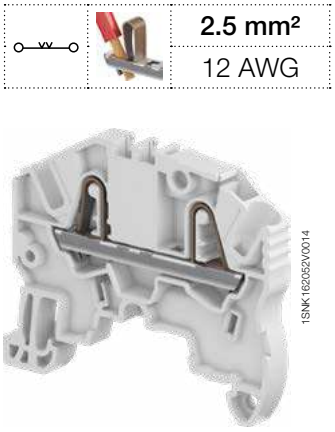

2.5 mm²
12 AWG

ZK2.5

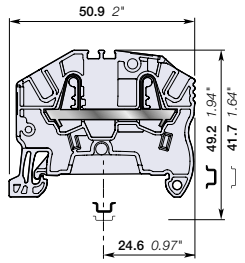

5.2 mm 0.205 in spacing

Description

Combine high performance with compact dimensions:
- 1000 V AC / DC IEC 600 V UL,
- Opt for the best marking visibility thanks to the up-front, flat marker zone, which lets you mark up to eight digits or increase the font size.

Ordering details

Description		Color	Type	Part Number		Pkg qty	Weight (1 pce) g
Feed-through	2 connections	Grey	ZK2.5	1SNK705010R0000		50	5.50
		Blue	ZK2.5-BL	1SNK705020R0000		50	5.50
		Orange	ZK2.5-OR	1SNK705030R0000		50	5.50
		Yellow	ZK2.5-YL	1SNK705060R0000		50	5.50
		Green	ZK2.5-GN	1SNK705061R0000		50	5.50
		Red	ZK2.5-RD	1SNK705062R0000		50	5.50
		White	ZK2.5-WH	1SNK705065R0000		50	5.50
		Black	ZK2.5-BK	1SNK705066R0000		50	5.50

Main technical data

Connecting capacity		IEC	UL - CSA
1 conductor per clamp	Rigid - Solid / Stranded	0.2 ... 4 mm²	26 ... 12 AWG
	Flexible	0.22 ... 2.5 mm²	
	with non insulated ferrule	0.22 ... 2.5 mm²	26 ... 14 AWG
	with insulated ferrule	0.22 ... 2.5 mm²	26 ... 14 AWG
2 conductors per clamp	Flexible with twin ferrule	0.22 ... 0.5 mm²	26 ... 20 AWG
Rated current / Rated cross section		24 A / 2.5 mm²	20 A / 12 AWG
Rated short-time withstand current (1s)		300 A	396 A
Short Circuit Current Rating (with specific conditions)			100 kA
Rated voltage		1000 V	600 V
Impulse withstand voltage		8000 V	
Protection		IP20	NEMA 1
Increased safety Ex e		693 V 21 A IEC/EN 60079-7 - IM2 II 2 GD Ex eb I/IIC/IIIC	

Mounting instructions

Rail	TH 35-7.5, TH 35-15
Wire stripping length	11 mm 0.433 in
Tool (for flexible conductor without ferrule)	Flat screwdriver Ø 3.5 mm Ø 0.138 in

The connecting capacity data for one Rigid - Solid / Stranded - Flexible conductor (when applicable) is a mandatory information required by IEC, UL and CSA standards (Copper conductors). All other data are provided as supplementary information only. For more details, please consult our CB, UL or CSA certificates and technical datasheet available on http://www.TE.com

CE | CB | RoHS | USR CNR | CSA | EAC Ex | ATEX | IECEx | Haz Loc | BV | DNV

Accessories

	Description			Color	Type	Part Number		Pkg qty	Weight (1 pce) g
1	**End stops**	5.2 mm	0.205 in	Dark grey	BAZ1	1SNK900002R0000		50	5.30
2	**End sections**	2 mm	0.079 in	Dark grey	EK2.5	1SNK705910R0000		20	1.80
3	**Jumper bars**	2 poles	32 A (IEC)	Orange	JB5-2	1SNK905302R0000		50	1.30
		3 poles	32 A (IEC)		JB5-3	1SNK905303R0000		50	2.00
		4 poles	32 A (IEC)		JB5-4	1SNK905304R0000		50	2.70
		5 poles	32 A (IEC)		JB5-5	1SNK905305R0000		50	3.50
		10 poles	32 A (IEC)		JB5-10	1SNK905310R0000		30	7.10
		50 poles	32 A (IEC)		JB5-50	1SNK905350R0000		10	36.00
4	**Cross spacing jumpers**	3 poles	32 A (IEC)	Orange	JB85-3	1SNK900603R0000		10	2.80
5	**Circuit separators**	3 mm	0.118 in	Dark grey	CS-R2	1SNK900106R0000		20	3.80
6	**Test adapters**	For test plugs DIA 2 mm 0.079 in		Dark grey	TP2	1SNK900203R0000		20	1.70
		For test plugs DIA 4 mm 0.157 in			TP4	1SNK900205R0000		20	2.40
7	**Test connectors**	5.2 mm 0.205 in spacing		Dark grey	TC5	1SNK900200R0000		10	5.20
		End module, 5.2 mm 0.205 in			TC5-R1	1SNK900201R0000		10	5.20
8	**Shield connectors**				SHBP	1SNK900601R0000		20	4.10
9	**Terminal block markers**	Blank marker		White	MG-CPM 13 41790	1SNB041790R0512		1960	0.23
		Blank card			MC512	1SNK140000R0000		22	9.00
					MC512PA	1SNK149999R0000		20	10.00
		Universal wire markers holder		Grey	UMH	1SNK900611R0000		10	0.20

Complete list of accessories is indicated in the terminal block datasheet including end stops.
Some accessories such as jumper bars may modify the terminal block's ratings: Complete information available in the accessories section of the catalog.

Ground PI-Spring terminal blocks

Description		Color	Type	Part Number		Pkg qty	Weight (1 pce) g
Ground	Profile aligned with ZK2.5	Green-yellow	ZK2.5-PE	1SNK705150R0000		20	10.00

Technical data valid for copper conductors only.

1SNK162023S0201

ZK2.5-3P PI-Spring terminal blocks

Feed-through with 3 connections - 5.2 mm 0.205 in spacing

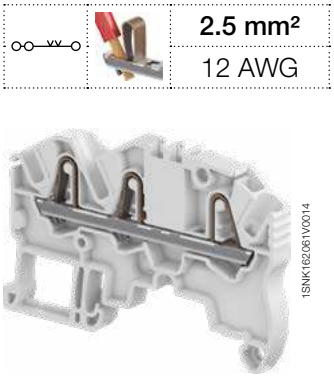

2.5 mm²
12 AWG

ZK2.5-3P

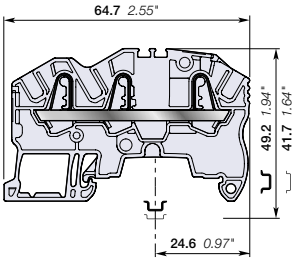

5.2 mm 0.205 in spacing

Description

Find all the features of the ZK2.5 terminal block with the added option of distributing or branching 3 conductors.

Ordering details

Description		Color	Type	Part Number		Pkg qty	Weight (1 pce) g
Feed-through	3 connections	Grey	ZK2.5-3P	1SNK705011R0000		50	7.40
		Blue	ZK2.5-3P-BL	1SNK705021R0000		50	7.40
		Orange	ZK2.5-3P-OR	1SNK705031R0000		50	7.40
		Yellow	ZK2.5-3P-YL	1SNK705067R0000		50	7.40
		Green	ZK2.5-3P-GN	1SNK705068R0000		50	7.40
		Red	ZK2.5-3P-RD	1SNK705069R0000		50	7.40
		White	ZK2.5-3P-WH	1SNK705072R0000		50	7.40
		Black	ZK2.5-3P-BK	1SNK705073R0000		50	7.40

Main technical data

Connecting capacity		IEC	UL - CSA
1 conductor per clamp	Rigid - Solid / Stranded	0.2 ... 4 mm²	26 ... 12 AWG
	Flexible	0.22 ... 2.5 mm²	
	with non insulated ferrule	0.22 ... 2.5 mm²	26 ... 14 AWG
	with insulated ferrule	0.22 ... 2.5 mm²	26 ... 14 AWG
2 conductors per clamp	Flexible with twin ferrule	0.22 ... 0.5 mm²	26 ... 20 AWG
Rated current / Rated cross section		24 A / 2.5 mm²	20 A / 12 AWG
Rated short-time withstand current (1s)		300 A	396 A
Short Circuit Current Rating (with specific conditions)			100 kA
Rated voltage		1000 V	600 V
Impulse withstand voltage		8000 V	
Protection		IP20	NEMA 1
Increased safety Ex e		693 V 21 A IEC/EN 60079-7 - IM2 II 2 GD Ex eb I/IIC/IIIC	

Mounting instructions

Rail		TH 35-7.5, TH 35-15
Wire stripping length		11 mm 0.433 in
Tool (for flexible conductor without ferrule)		Flat screwdriver Ø 3.5 mm Ø 0.138 in

The connecting capacity data for one Rigid - Solid / Stranded - Flexible conductor (when applicable) is a mandatory information required by IEC, UL and CSA standards (Copper conductors). All other data are provided as supplementary information only. For more details, please consult our CB, UL or CSA certificates and technical datasheet available on http://www.TE.com

CE | CB | RoHS | USR CNR | CSA | EAC Ex | ATEX | IECEx | Haz Loc | BV | DNV

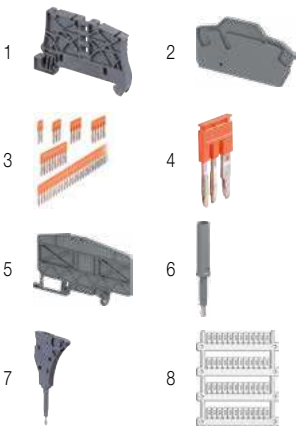

Accessories

	Description			Color	Type	Part Number		Pkg qty	Weight (1 pce) g
1	**End stops**	5.2 mm	0.205 in	Dark grey	BAZ1	1SNK900002R0000		50	5.30
2	**End sections**	2 mm	0.079 in	Dark grey	EK2.5-3P	1SNK705911R0000		20	2.40
3	**Jumper bars**	2 poles	32 A (IEC)	Orange	JB5-2	1SNK905302R0000		50	1.30
		3 poles	32 A (IEC)		JB5-3	1SNK905303R0000		50	2.00
		4 poles	32 A (IEC)		JB5-4	1SNK905304R0000		50	2.70
		5 poles	32 A (IEC)		JB5-5	1SNK905305R0000		50	3.50
		10 poles	32 A (IEC)		JB5-10	1SNK905310R0000		30	7.10
		50 poles	32 A (IEC)		JB5-50	1SNK905350R0000		10	36.00
4	**Cross spacing jumpers**	3 poles	32 A (IEC)	Orange	JB85-3	1SNK900603R0000		10	2.80
5	**Circuit separators**	3 mm	0.118 in	Dark grey	CS-R3	1SNK900107R0000		20	6.40
6	**Test adapters**	For test plugs DIA 2 mm 0.079 in		Dark grey	TP2	1SNK900203R0000		20	1.70
		For test plugs DIA 4 mm 0.157 in			TP4	1SNK900205R0000		20	2.40
7	**Test connectors**	5.2 mm 0.205 in spacing		Dark grey	TC5	1SNK900200R0000		10	5.20
		End module, 5.2 mm 0.205 in			TC5-R1	1SNK900201R0000		10	5.20
8	**Terminal block markers**	Blank marker		White	MG-CPM 13 41790	1SNB041790R0512		1960	0.23
		Blank card			MC512	1SNK140000R0000		22	9.00
					MC512PA	1SNK149999R0000		20	10.00
		Universal wire markers holder		Grey	UMH	1SNK900611R0000		10	0.20

Complete list of accessories is indicated in the terminal block datasheet including end stops.
Some accessories such as jumper bars may modify the terminal block's ratings: Complete information available in the accessories section of the catalog.

Ground PI-Spring terminal blocks

Description		Color	Type	Part Number		Pkg qty	Weight (1 pce) g
Ground	Profile aligned with ZK2.5-3P	Green-yellow	ZK2.5-PE-3P	1SNK705151R0000		20	11.90

1SNK162024S0201

Technical data valid for copper conductors only.

ZK2.5-4P PI-Spring terminal blocks

Feed-through with 4 connections - 5.2 mm 0.205 in spacing

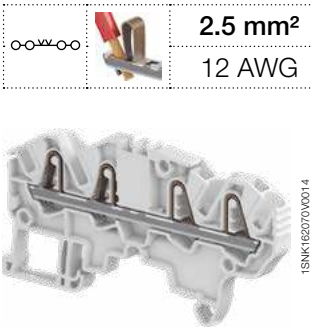

ZK2.5-4P

2.5 mm²
12 AWG

Description

Find all the features of the ZK2.5 terminal block with the added option of distributing or branching 4 conductors.

Ordering details

Description		Color	Type	Part Number		Pkg qty	Weight (1 pce) g
Feed-through	4 connections	Grey	ZK2.5-4P	1SNK705012R0000		50	9.00
		Blue	ZK2.5-4P-BL	1SNK705022R0000		50	9.00
		Orange	ZK2.5-4P-OR	1SNK705032R0000		50	9.00
		Yellow	ZK2.5-4P-YL	1SNK705074R0000		50	9.00
		Green	ZK2.5-4P-GN	1SNK705075R0000		50	9.00
		Red	ZK2.5-4P-RD	1SNK705076R0000		50	9.00
		White	ZK2.5-4P-WH	1SNK705079R0000		50	9.00
		Black	ZK2.5-4P-BK	1SNK705080R0000		50	9.00

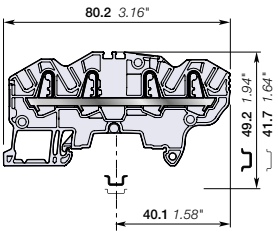

5.2 mm 0.205 in spacing

Main technical data

Connecting capacity		IEC	UL - CSA
1 conductor per clamp	Rigid - Solid / Stranded	0.2 ... 4 mm²	26 ... 12 AWG
	Flexible	0.22 ... 2.5 mm²	
	with non insulated ferrule	0.22 ... 2.5 mm²	26 ... 14 AWG
	with insulated ferrule	0.22 ... 2.5 mm²	26 ... 14 AWG
2 conductors per clamp	Flexible with twin ferrule	0.22 ... 0.5 mm²	26 ... 20 AWG
Rated current / Rated cross section		24 A / 2.5 mm²	20 A / 12 AWG
Rated short-time withstand current (1s)		300 A	396 A
Short Circuit Current Rating (with specific conditions)			100 kA
Rated voltage		1000 V	600 V
Impulse withstand voltage		8000 V	
Protection		IP20	NEMA 1
Increased safety Ex e		693 V 21 A IEC/EN 60079-7 - IM2 II 2 GD Ex eb I/IIC/IIIC	

Mounting instructions

Rail		TH 35-7.5, TH 35-15
Wire stripping length		11 mm 0.433 in
Tool (for flexible conductor without ferrule)		Flat screwdriver Ø 3.5 mm Ø 0.138 in

The connecting capacity data for one Rigid - Solid / Stranded - Flexible conductor (when applicable) is a mandatory information required by IEC, UL and CSA standards (Copper conductors). All other data are provided as supplementary information only. For more details, please consult our CB, UL or CSA certificates and technical datasheet available on http://www.TE.com

CE | CB | RoHS | USR CNR | CSA | EAC Ex | ATEX | IECEx | Haz Loc | BV | DNV

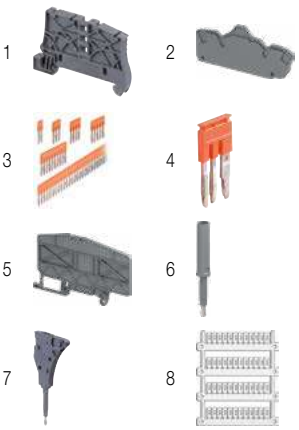

Accessories

	Description			Color	Type	Part Number		Pkg qty	Weight (1 pce) g
1	**End stops**	5.2 mm	0.205 in	Dark grey	BAZ1	1SNK900002R0000		50	5.30
2	**End sections**	2 mm	0.079 in	Dark grey	EK2.5-4P	1SNK705912R0000		20	2.70
3	**Jumper bars**	2 poles	32 A (IEC)	Orange	JB5-2	1SNK905302R0000		50	1.30
		3 poles	32 A (IEC)		JB5-3	1SNK905303R0000		50	2.00
		4 poles	32 A (IEC)		JB5-4	1SNK905304R0000		50	2.70
		5 poles	32 A (IEC)		JB5-5	1SNK905305R0000		50	3.50
		10 poles	32 A (IEC)		JB5-10	1SNK905310R0000		30	7.10
		50 poles	32 A (IEC)		JB5-50	1SNK905350R0000		10	36.00
4	**Cross spacing jumpers**	3 poles	32 A (IEC)	Orange	JB85-3	1SNK900603R0000		10	2.80
5	**Circuit separators**	3 mm	0.118 in	Dark grey	CS-R3	1SNK900107R0000		20	6.40
6	**Test adapters**	For test plugs DIA 2 mm 0.079 in		Dark grey	TP2	1SNK900203R0000		20	1.70
		For test plugs DIA 4 mm 0.157 in			TP4	1SNK900205R0000		20	2.40
7	**Test connectors**	5.2 mm 0.205 in spacing		Dark grey	TC5	1SNK900200R0000		10	5.20
		End module, 5.2 mm 0.205 in			TC5-R1	1SNK900201R0000		10	5.20
8	**Terminal block markers**	Blank marker		White	MG-CPM 13 41790	1SNB041790R0512		1960	0.23
		Blank card			MC512	1SNK140000R0000		22	9.00
					MC512PA	1SNK149999R0000		20	10.00
		Universal wire markers holder		Grey	UMH	1SNK900611R0000		10	0.20

Complete list of accessories is indicated in the terminal block datasheet including end stops.
Some accessories such as jumper bars may modify the terminal block's ratings: Complete information available in the accessories section of the catalog.

Ground PI-Spring terminal blocks

Description		Color	Type	Part Number		Pkg qty	Weight (1 pce) g
Ground	Profile aligned with ZK2.5-4P	Green-yellow	ZK2.5-PE-4P	1SNK705152R0000		20	13.60

1SNK162025S0201

Technical data valid for copper conductors only.

ZK4 PI-Spring terminal blocks
Feed-through - 6 mm 0.236 in spacing

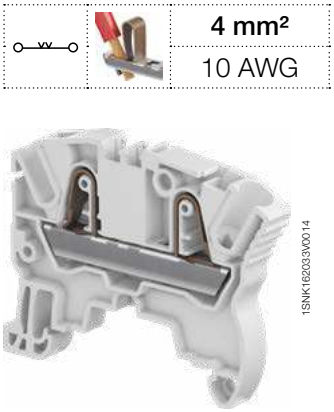

ZK4

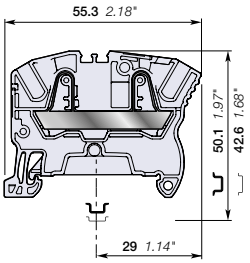

6 mm 0.236 in spacing

	4 mm²
	10 AWG

Description

Combine high performance with compact dimensions:
- 1000 V AC / DC IEC 600 V UL,
- Opt for the best marking visibility thanks to the up-front, flat marker zone, which lets you mark up to eight digits or increase the font size.

Ordering details

Description		Color	Type	Part Number		Pkg qty	Weight (1 pce) g
Feed-through	2 connections	Grey	ZK4	1SNK706010R0000		50	7.90
		Blue	ZK4-BL	1SNK706020R0000		50	7.90
		Orange	ZK4-OR	1SNK706030R0000		50	7.90
		Yellow	ZK4-YL	1SNK706060R0000		50	7.90
		Red	ZK4-RD	1SNK706062R0000		50	7.90
		Black	ZK4-BK	1SNK706066R0000		50	7.90

Main technical data

Connecting capacity		IEC	UL - CSA
1 conductor per clamp	Rigid - Solid / Stranded	0.5 ... 6 mm²	26 ... 10 AWG
	Flexible	0.5 ... 4 mm²	
	with non insulated ferrule	0.5 ... 4 mm²	26 ... 12 AWG
	with insulated ferrule	0.5 ... 4 mm²	26 ... 12 AWG
2 conductors per clamp	Flexible with twin ferrule	0.5 ... 1 mm²	26 ... 18 AWG
Rated current / Rated cross section		32 A / 4 mm²	30 A / 10 AWG
Rated short-time withstand current (1s)		480 A	636 A
Short Circuit Current Rating (with specific conditions)			100 kA
Rated voltage		1000 V	600 V
Impulse withstand voltage		8000 V	
Protection		IP20	NEMA 1
Increased safety Ex e		693 V 29 A IEC/EN 60079-7 - IM2 II 2 GD Ex eb I/IIC/IIIC	

The connecting capacity data for one Rigid - Solid / Stranded - Flexible conductor (when applicable) is a mandatory information required by IEC, UL and CSA standards (Copper conductors). All other data are provided as supplementary information only. For more details, please consult our CB, UL or CSA certificates and technical datasheet available on http://www.TE.com

CE, CB, RoHS, USR CNR, CSA, EAC Ex, ATEX, IECEx, Haz Loc, BV, DNV

Mounting instructions

Rail		TH 35-7.5, TH 35-15
Wire stripping length		12.5 mm 0.492 in
Tool (for flexible conductor without ferrule)		Flat screwdriver Ø 3.5 mm Ø 0.138 in

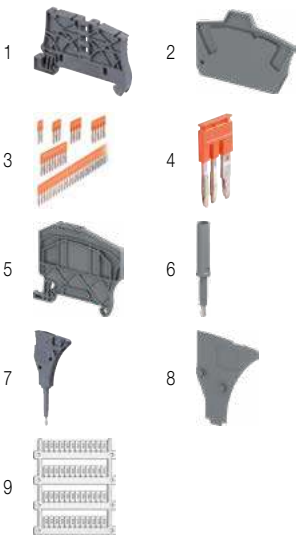

Accessories

	Description			Color	Type	Part Number		Pkg qty	Weight (1 pce) g
1	**End stops**	5.2 mm	0.205 in	Dark grey	BAZ1	1SNK900002R0000		50	5.30
2	**End sections**	2 mm	0.079 in	Dark grey	EK2.5	1SNK705910R0000		20	1.80
3	**Jumper bars**	2 poles	41 A (IEC)	Orange	JB6-2	1SNK906302R0000		50	1.30
		3 poles	41 A (IEC)		JB6-3	1SNK906303R0000		50	2.10
		4 poles	41 A (IEC)		JB6-4	1SNK906304R0000		50	2.90
		5 poles	41 A (IEC)		JB6-5	1SNK906305R0000		50	3.60
		10 poles	41 A (IEC)		JB6-10	1SNK906310R0000		20	7.40
		50 poles	41 A (IEC)		JB6-50	1SNK906350R0000		10	38.10
4	**Cross spacing jumpers**	3 poles	32 A (IEC)	Orange	JB85-3	1SNK900603R0000		10	2.80
5	**Circuit separators**	3 mm	0.118 in	Dark grey	CS-R2	1SNK900106R0000		20	3.80
6	**Test adapters**	For test plugs DIA 2 mm 0.079 in		Dark grey	TP2	1SNK900203R0000		20	1.70
		For test plugs DIA 4 mm 0.157 in			TP4	1SNK900205R0000		20	2.40
7	**Test connectors**	End module, 5.2 mm 0.205 in		Dark grey	TC5-R1	1SNK900201R0000		10	5.20
8	**Spacers**	0.8 mm	0.031 in	Dark grey	ES-TC6	1SNK900105R0000		10	0.80
9	**Terminal block markers**	Blank marker		White	MG-CPM 13 41791	1SNB041791R0612		1680	0.27
		Blank card			MC612	1SNK150000R0000		22	10.00
					MC612PA	1SNK159999R0000		20	11.00
		Universal wire markers holder		Grey	UMH	1SNK900611R0000		10	0.20

Complete list of accessories is indicated in the terminal block datasheet including end stops.
Some accessories such as jumper bars may modify the terminal block's ratings: Complete information available in the accessories section of the catalog.

Ground PI-Spring terminal blocks

Description		Color	Type	Part Number		Pkg qty	Weight (1 pce) g
Ground	Profile aligned with ZK4	Green-yellow	ZK4-PE	1SNK706150R0000		20	12.60

1SNK162026S0201

Technical data valid for copper conductors only.

ZK4-3P PI-Spring terminal blocks

Feed-through with 3 connections - 6 mm 0.236 in spacing

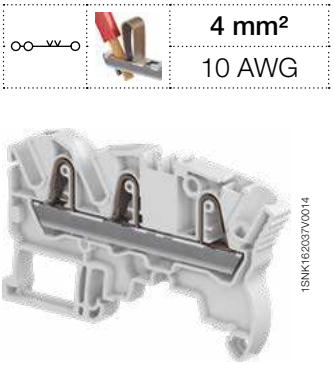

4 mm²
10 AWG

ZK4-3P

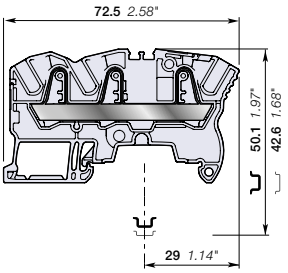

6 mm 0.236 in spacing

Description

Find all the features of the ZK4 terminal block with the added option of distributing or branching 3 conductors.

Ordering details

Description		Color	Type	Part Number		Pkg qty	Weight (1 pce) g
Feed-through	3 connections	Grey	ZK4-3P	1SNK706011R0000		50	11.00
		Blue	ZK4-3P-BL	1SNK706021R0000		50	11.00
		Orange	ZK4-3P-OR	1SNK706031R0000		50	11.00

Main technical data

Connecting capacity		IEC	UL - CSA
1 conductor per clamp	Rigid - Solid / Stranded	0.5 ... 6 mm²	26 ... 10 AWG
	Flexible	0.5 ... 4 mm²	
	with non insulated ferrule	0.5 ... 4 mm²	26 ... 12 AWG
	with insulated ferrule	0.5 ... 4 mm²	26 ... 12 AWG
2 conductors per clamp	Flexible with twin ferrule	0.5 ... 1 mm²	26 ... 18 AWG
Rated current / Rated cross section		32 A / 4 mm²	30 A / 10 AWG
Rated short-time withstand current (1s)		480 A	636 A
Short Circuit Current Rating (with specific conditions)			100 kA
Rated voltage		1000 V	600 V
Impulse withstand voltage		8000 V	
Protection		IP20	NEMA 1
Increased safety Ex e		693 V 29 A IEC/EN 60079-7 - IM2 II 2 GD Ex eb I/IIC/IIIC	

Mounting instructions

Rail		TH 35-7.5, TH 35-15
Wire stripping length		12.5 mm 0.492 in
Tool (for flexible conductor without ferrule)		Flat screwdriver Ø 3.5 mm Ø 0.138 in

The connecting capacity data for one Rigid - Solid / Stranded - Flexible conductor (when applicable) is a mandatory information required by IEC, UL and CSA standards (Copper conductors). All other data are provided as supplementary information only. For more details, please consult our CB, UL or CSA certificates and technical datasheet available on http://www.TE.com

CE, CB, RoHS, USR CNR, CSA, EAC Ex, ATEX, IECEx, Haz Loc, BV, DNV

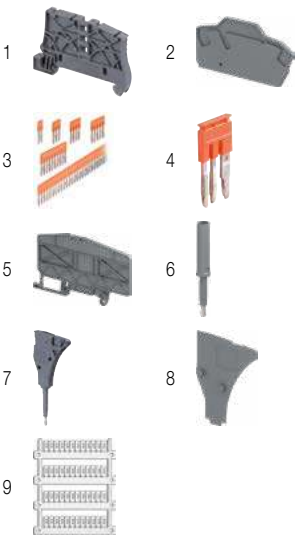

Accessories

	Description			Color	Type	Part Number		Pkg qty	Weight (1 pce) g
1	**End stops**	5.2 mm	0.205 in	Dark grey	BAZ1	1SNK900002R0000		50	5.30
2	**End sections**	2 mm	0.079 in	Dark grey	EK2.5-3P	1SNK705911R0000		20	2.40
3	**Jumper bars**	2 poles	41 A (IEC)	Orange	JB6-2	1SNK906302R0000		50	1.30
		3 poles	41 A (IEC)		JB6-3	1SNK906303R0000		50	2.10
		4 poles	41 A (IEC)		JB6-4	1SNK906304R0000		50	2.90
		5 poles	41 A (IEC)		JB6-5	1SNK906305R0000		50	3.60
		10 poles	41 A (IEC)		JB6-10	1SNK906310R0000		20	7.40
		50 poles	41 A (IEC)		JB6-50	1SNK906350R0000		10	38.10
4	**Cross spacing jumpers**	3 poles	32 A (IEC)	Orange	JB85-3	1SNK900603R0000		10	2.80
5	**Circuit separators**	3 mm	0.118 in	Dark grey	CS-R3	1SNK900107R0000		20	6.40
6	**Test adapters**	For test plugs DIA 2 mm 0.079 in		Dark grey	TP2	1SNK900203R0000		20	1.70
		For test plugs DIA 4 mm 0.157 in			TP4	1SNK900205R0000		20	2.40
7	**Test connectors**	End module, 5.2 mm 0.205 in		Dark grey	TC5-R1	1SNK900201R0000		10	5.20
8	**Spacers**	0.8 mm	0.031 in	Dark grey	ES-TC6	1SNK900105R0000		10	0.80
9	**Terminal block markers**	Blank marker		White	MG-CPM 13 41791	1SNB041791R0612		1680	0.27
		Blank card			MC612	1SNK150000R0000		22	10.00
					MC612PA	1SNK159999R0000		20	11.00
		Universal wire markers holder		Grey	UMH	1SNK900611R0000		10	0.20

Complete list of accessories is indicated in the terminal block datasheet including end stops.
Some accessories such as jumper bars may modify the terminal block's ratings: Complete information available in the accessories section of the catalog.

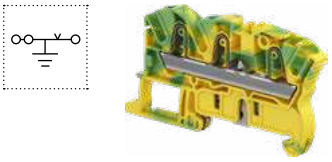

Ground PI-Spring terminal blocks

Description		Color	Type	Part Number		Pkg qty	Weight (1 pce) g
Ground	Profile aligned with ZK4-3P	Green-yellow	ZK4-PE-3P	1SNK706151R0000		20	15.70

1SNK162027S0201

Technical data valid for copper conductors only.

ZK4-4P PI-Spring terminal blocks

Feed-through with 4 connections - 6 mm 0.236 in spacing

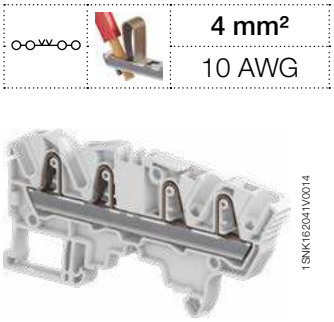

4 mm²
10 AWG

1SNK162041V0014

ZK4-4P

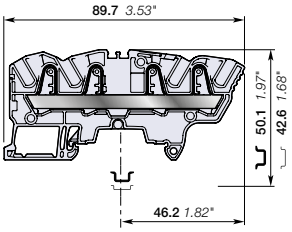

6 mm 0.236 in spacing

Description

Find all the features of the ZK4 terminal block with the added option of distributing or branching 4 conductors.

Ordering details

Description		Color	Type	Part Number		Pkg qty	Weight (1 pce) g
Feed-through	4 connections	Grey	ZK4-4P	1SNK706012R0000		50	13.80
		Blue	ZK4-4P-BL	1SNK706022R0000		50	13.80
		Orange	ZK4-4P-OR	1SNK706032R0000		50	13.80

Main technical data

Connecting capacity		IEC	UL - CSA
1 conductor per clamp	Rigid - Solid / Stranded	0.5 ... 6 mm²	26 ... 10 AWG
	Flexible	0.5 ... 4 mm²	
	with non insulated ferrule	0.5 ... 4 mm²	26 ... 12 AWG
	with insulated ferrule	0.5 ... 4 mm²	26 ... 12 AWG
2 conductors per clamp	Flexible with twin ferrule	0.5 ... 1 mm²	26 ... 18 AWG
Rated current / Rated cross section		32 A / 4 mm²	30 A / 10 AWG
Rated short-time withstand current (1s)		480 A	636 A
Short Circuit Current Rating (with specific conditions)			100 kA
Rated voltage		1000 V	600 V
Impulse withstand voltage		8000 V	
Protection		IP20	NEMA 1
Increased safety Ex e		693 V 29 A IEC/EN 60079-7 - IM2 II 2 GD Ex eb I/IIC/IIIC	

Mounting instructions

Rail		TH 35-7.5, TH 35-15
Wire stripping length		12.5 mm 0.492 in
Tool (for flexible conductor without ferrule)		Flat screwdriver Ø 3.5 mm Ø 0.138 in

The connecting capacity data for one Rigid - Solid / Stranded - Flexible conductor (when applicable) is a mandatory information required by IEC, UL and CSA standards (Copper conductors). All other data are provided as supplementary information only. For more details, please consult our CB, UL or CSA certificates and technical datasheet available on http://www.TE.com

CE, CB, RoHS, USR CNR, CSA, EAC Ex, ATEX, IECEx, Haz Loc, BV, DNV

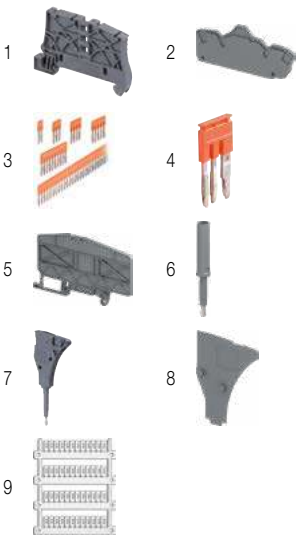

Accessories

	Description			Color	Type	Part Number		Pkg qty	Weight (1 pce) g
1	**End stops**	5.2 mm	0.205 in	Dark grey	BAZ1	1SNK900002R0000		50	5.30
2	**End sections**	2 mm	0.079 in	Dark grey	EK2.5-4P	1SNK705912R0000		20	2.70
3	**Jumper bars**	2 poles	41 A (IEC)	Orange	JB6-2	1SNK906302R0000		50	1.30
		3 poles	41 A (IEC)		JB6-3	1SNK906303R0000		50	2.10
		4 poles	41 A (IEC)		JB6-4	1SNK906304R0000		50	2.90
		5 poles	41 A (IEC)		JB6-5	1SNK906305R0000		50	3.60
		10 poles	41 A (IEC)		JB6-10	1SNK906310R0000		20	7.40
		50 poles	41 A (IEC)		JB6-50	1SNK906350R0000		10	38.10
4	**Cross spacing jumpers**	3 poles	32 A (IEC)	Orange	JB85-3	1SNK900603R0000		10	2.80
5	**Circuit separators**	3 mm	0.118 in	Dark grey	CS-R3	1SNK900107R0000		20	6.40
6	**Test adapters**	For test plugs DIA 2 mm 0.079 in		Dark grey	TP2	1SNK900203R0000		20	1.70
		For test plugs DIA 4 mm 0.157 in			TP4	1SNK900205R0000		20	2.40
7	**Test connectors**	End module, 5.2 mm 0.205 in		Dark grey	TC5-R1	1SNK900201R0000		10	5.20
8	**Spacers**	0.8 mm	0.031 in	Dark grey	ES-TC6	1SNK900105R0000		10	0.80
9	**Terminal block markers**	Blank marker		White	MG-CPM 13 41791	1SNB041791R0612		1680	0.27
		Blank card			MC612	1SNK150000R0000		22	10.00
					MC612PA	1SNK159999R0000		20	11.00
		Universal wire markers holder		Grey	UMH	1SNK900611R0000		10	0.20

Complete list of accessories is indicated in the terminal block datasheet including end stops.
Some accessories such as jumper bars may modify the terminal block's ratings: Complete information available in the accessories section of the catalog.

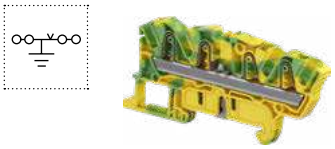

Ground PI-Spring terminal blocks

Description		Color	Type	Part Number		Pkg qty	Weight (1 pce) g
Ground	Profile aligned with ZK4-4P	Green-yellow	ZK4-PE-4P	1SNK706152R0000		20	18.40

1SNK162028S0201

Technical data valid for copper conductors only.

ZK6 PI-Spring terminal blocks
Feed-through - 8 mm 0.315 in spacing

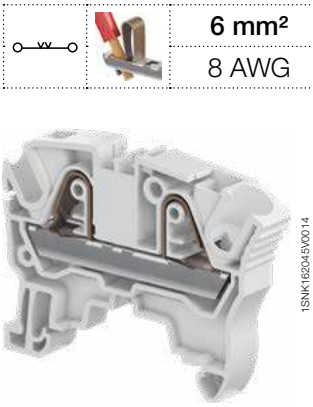

6 mm²
8 AWG

1SNK162045V0014

ZK6

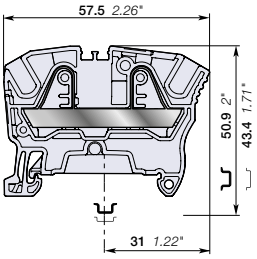

8 mm 0.315 in spacing

Description

Combine high performance with compact dimensions:
- 1000 V AC / DC IEC 600 V UL,
- Opt for the best marking visibility thanks to the up-front, flat marker zone, which lets you mark up to eight digits or increase the font size.

Ordering details

Description		Color	Type	Part Number		Pkg qty	Weight (1 pce) g
Feed-through	2 connections	Grey	ZK6	1SNK708010R0000		50	11.80
		Blue	ZK6-BL	1SNK708020R0000		50	11.80
		Orange	ZK6-OR	1SNK708030R0000		50	11.80
		Yellow	ZK6-YL	1SNK708060R0000		50	11.80
		Red	ZK6-RD	1SNK708062R0000		50	11.80
		Black	ZK6-BK	1SNK708066R0000		50	11.80

Main technical data

Connecting capacity		IEC	UL - CSA
1 conductor per clamp	Rigid - Solid / Stranded	0.5 ... 10 mm²	24 ... 8 AWG
	Flexible	0.5 ... 6 mm²	
	with non insulated ferrule	0.5 ... 6 mm²	24 ... 10 AWG
	with insulated ferrule	0.5 ... 6 mm²	24 ... 10 AWG
2 conductors per clamp	Flexible with twin ferrule	0.5 ... 1.5 mm²	24 ... 16 AWG
Rated current / Rated cross section		41 A / 6 mm²	50 A / 8 AWG
Rated short-time withstand current (1s)		720 A	1008 A
Short Circuit Current Rating (with specific conditions)			100 kA
Rated voltage		1000 V	600 V
Impulse withstand voltage		8000 V	
Protection		IP20	NEMA 1
Increased safety Ex e		693 V 37 A IEC/EN 60079-7 - IM2 II 2 GD Ex eb I/IIC/IIIC	

Mounting instructions

Rail	TH 35-7.5, TH 35-15
Wire stripping length	12.5 mm 0.492 in
Tool (for flexible conductor without ferrule)	Flat screwdriver Ø 3.5 mm Ø 0.138 in

The connecting capacity data for one Rigid - Solid / Stranded - Flexible conductor (when applicable) is a mandatory information required by IEC, UL and CSA standards (Copper conductors). All other data are provided as supplementary information only. For more details, please consult our CB, UL or CSA certificates and technical datasheet available on http://www.TE.com

CE | CB | RoHS | USR CNR | CSA | EAC Ex | ATEX | IECEx | Haz Loc | BV | DNV

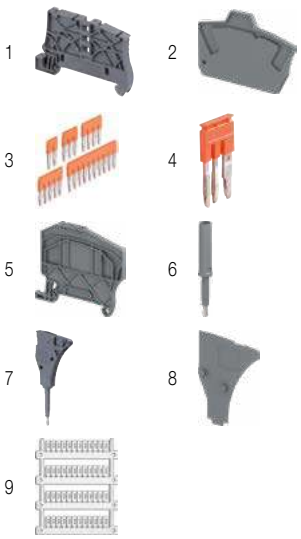

Accessories

	Description			Color	Type	Part Number		Pkg qty	Weight (1 pce) g
1	**End stops**	5.2 mm	0.205 in	Dark grey	BAZ1	1SNK900002R0000		50	5.30
2	**End sections**	2 mm	0.079 in	Dark grey	EK2.5	1SNK705910R0000		20	1.80
3	**Jumper bars**	2 poles	57 A (IEC)	Orange	JB8-2	1SNK908302R0000		50	2.70
		3 poles	57 A (IEC)		JB8-3	1SNK908303R0000		50	4.10
		4 poles	57 A (IEC)		JB8-4	1SNK908304R0000		50	5.60
		5 poles	57 A (IEC)		JB8-5	1SNK908305R0000		40	7.00
		10 poles	57 A (IEC)		JB8-10	1SNK908310R0000		20	14.20
4	**Cross spacing jumpers**	3 poles	32 A (IEC)	Orange	JB85-3	1SNK900603R0000		10	2.80
5	**Circuit separators**	3 mm	0.118 in	Dark grey	CS-R2	1SNK900106R0000		20	3.80
6	**Test adapters**	For test plugs DIA 2 mm 0.079 in		Dark grey	TP2	1SNK900203R0000		20	1.70
		For test plugs DIA 4 mm 0.157 in			TP4	1SNK900205R0000		20	2.40
7	**Test connectors**	End module, 5.2 mm 0.205 in		Dark grey	TC5-R1	1SNK900201R0000		10	5.20
8	**Spacers**	2.8 mm	0.110 in	Dark grey	ES-TC8	1SNK900104R0000		10	1.40
9	**Terminal block markers**	Blank marker		White	MG-CPM 13 41791	1SNB041791R0612		1680	0.27
		Blank card			MC812	1SNK160000R0000		22	10.00
					MC812PA	1SNK169999R0000		20	14.00
		Universal wire markers holder		Grey	UMH	1SNK900611R0000		10	0.20

Complete list of accessories is indicated in the terminal block datasheet including end stops.
Some accessories such as jumper bars may modify the terminal block's ratings: Complete information available in the accessories section of the catalog.

Ground PI-Spring terminal blocks

Description		Color	Type	Part Number		Pkg qty	Weight (1 pce) g
Ground	Profile aligned with ZK6	Green-yellow	ZK6-PE	1SNK708150R0000		20	20.30

1SNK162029S0201

Technical data valid for copper conductors only.

ZK6-3P PI-Spring terminal blocks

Feed-through with 3 connections - 8 mm 0.315 in spacing

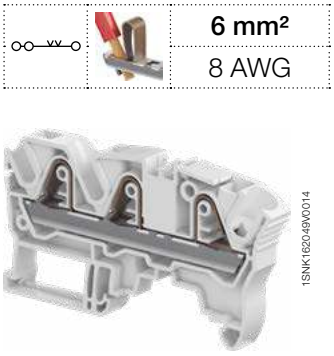

ZK6-3P

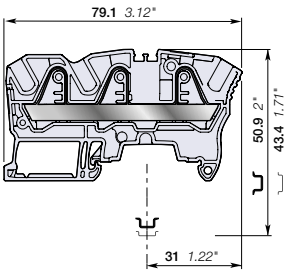

8 mm 0.315 in spacing

	6 mm²
	8 AWG

Description

Find all the features of the ZK6 terminal block with the added option of distributing or branching 3 conductors.

Ordering details

Description		Color	Type	Part Number		Pkg qty	Weight (1 pce) g
Feed-through	3 connections	Grey	ZK6-3P	1SNK708011R0000		50	16.70
		Blue	ZK6-3P-BL	1SNK708021R0000		50	16.70
		Orange	ZK6-3P-OR	1SNK708031R0000		50	16.70

Main technical data

Connecting capacity		IEC	UL - CSA
1 conductor per clamp	Rigid - Solid / Stranded	0.5 ... 10 mm²	24 ... 8 AWG
	Flexible	0.5 ... 6 mm²	
	with non insulated ferrule	0.5 ... 6 mm²	24 ... 10 AWG
	with insulated ferrule	0.5 ... 6 mm²	24 ... 10 AWG
2 conductors per clamp	Flexible with twin ferrule	0.5 ... 1.5 mm²	24 ... 16 AWG
Rated current / Rated cross section		41 A / 6 mm²	50 A / 8 AWG
Rated short-time withstand current (1s)		720 A	1008 A
Short Circuit Current Rating (with specific conditions)			100 kA
Rated voltage		1000 V	600 V
Impulse withstand voltage		8000 V	
Protection		IP20	NEMA 1
Increased safety Ex e		693 V 37 A IEC/EN 60079-7 - IM2 II 2 GD Ex eb I/IIC/IIIC	

Mounting instructions

Rail		TH 35-7.5, TH 35-15
Wire stripping length		12.5 mm 0.492 in
Tool (for flexible conductor without ferrule)		Flat screwdriver Ø 3.5 mm Ø 0.138 in

The connecting capacity data for one Rigid - Solid / Stranded - Flexible conductor (when applicable) is a mandatory information required by IEC, UL and CSA standards (Copper conductors). All other data are provided as supplementary information only. For more details, please consult our CB, UL or CSA certificates and technical datasheet available on http://www.TE.com

CE, CB, RoHS, USR CNR, CSA, EAC Ex, ATEX, IECEx, Haz Loc, BV, DNV

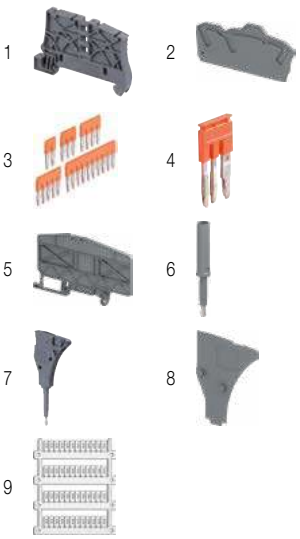

Accessories

	Description			Color	Type	Part Number		Pkg qty	Weight (1 pce) g
1	**End stops**	5.2 mm	0.205 in	Dark grey	BAZ1	1SNK900002R0000		50	5.30
2	**End sections**	2 mm	0.079 in	Dark grey	EK6-3P	1SNK708911R0000		20	2.80
3	**Jumper bars**	2 poles	57 A (IEC)	Orange	JB8-2	1SNK908302R0000		50	2.70
		3 poles	57 A (IEC)		JB8-3	1SNK908303R0000		50	4.10
		4 poles	57 A (IEC)		JB8-4	1SNK908304R0000		50	5.60
		5 poles	57 A (IEC)		JB8-5	1SNK908305R0000		40	7.00
		10 poles	57 A (IEC)		JB8-10	1SNK908310R0000		20	14.20
4	**Cross spacing jumpers**	3 poles	32 A (IEC)	Orange	JB85-3	1SNK900603R0000		10	2.80
5	**Circuit separators**	3 mm	0.118 in	Dark grey	CS-R3	1SNK900107R0000		20	6.40
6	**Test adapters**	For test plugs DIA 2 mm 0.079 in		Dark grey	TP2	1SNK900203R0000		20	1.70
		For test plugs DIA 4 mm 0.157 in			TP4	1SNK900205R0000		20	2.40
7	**Test connectors**	End module, 5.2 mm 0.205 in		Dark grey	TC5-R1	1SNK900201R0000		10	5.20
8	**Spacers**	2.8 mm	0.110 in	Dark grey	ES-TC8	1SNK900104R0000		10	1.40
9	**Terminal block markers**	Blank marker		White	MG-CPM 13 41791	1SNB041791R0612		1680	0.27
		Blank card			MC812	1SNK160000R0000		22	10.00
					MC812PA	1SNK169999R0000		20	14.00
		Universal wire markers holder		Grey	UMH	1SNK900611R0000		10	0.20

Complete list of accessories is indicated in the terminal block datasheet including end stops.
Some accessories such as jumper bars may modify the terminal block's ratings: Complete information available in the accessories section of the catalog.

Ground PI-Spring terminal blocks

Description		Color	Type	Part Number		Pkg qty	Weight (1 pce) g
Ground	Profile aligned with ZK6-3P	Green-yellow	ZK6-PE-3P	1SNK708151R0000		20	21.50

1SNK162030S0201

Technical data valid for copper conductors only.

ZK10 PI-Spring terminal blocks
Feed-through - 10 mm 0.394 in spacing

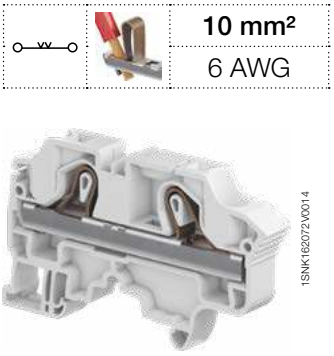

ZK10

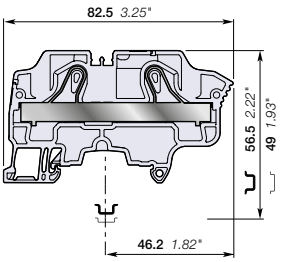

10 mm 0.394 in spacing

10 mm²
6 AWG

Description

Combine high performance with compact dimensions:
- 1000 V AC / DC IEC 600 V UL,
- Opt for the best marking visibility thanks to the up-front, flat marker zone, which lets you mark up to eight digits or increase the font size.

Ordering details

Description		Color	Type	Part Number		Pkg qty	Weight (1 pce) g
Feed-through	2 connections	Grey	ZK10	1SNK710010R0000		20	27.20
		Blue	ZK10-BL	1SNK710020R0000		20	27.20
		Orange	ZK10-OR	1SNK710030R0000		20	27.20

Main technical data

Connecting capacity		IEC	UL - CSA
1 conductor per clamp	Rigid - Solid / Stranded	0.5 ... 16 mm²	20 ... 6 AWG
	Flexible	0.5 ... 10 mm²	
	with non insulated ferrule	0.5 ... 10 mm²	20 ... 8 AWG
	with insulated ferrule	0.5 ... 10 mm²	20 ... 8 AWG
2 conductors per clamp	Flexible with twin ferrule	0.5 ... 4 mm²	20 ... 12 AWG
Rated current / Rated cross section		57 A / 10 mm²	55 A / 6 AWG
Rated short-time withstand current (1s)		1200 A	1596 A
Short Circuit Current Rating (with specific conditions)			100 kA
Rated voltage		1000 V	600 V
Impulse withstand voltage		8000 V	
Protection		IP20	NEMA 1
Increased safety Ex e		693 V 51 A IEC/EN 60079-7 - IM2 II 2 GD Ex eb I/IIC/IIIC	

Mounting instructions

Rail	TH 35-7.5, TH 35-15
Wire stripping length	15 mm 0.591 in
Tool (for flexible conductor without ferrule)	Flat screwdriver Ø 4 mm Ø 0.157 in

The connecting capacity data for one Rigid - Solid / Stranded - Flexible conductor (when applicable) is a mandatory information required by IEC, UL and CSA standards (Copper conductors). All other data are provided as supplementary information only. For more details, please consult our CB, UL or CSA certificates and technical datasheet available on http://www.TE.com

CE, CB, RoHS, USR CNR, CSA, EAC Ex, ATEX, IECEx, Haz Loc, BV, DNV

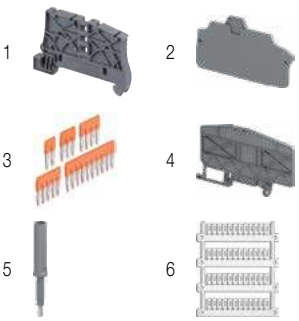

Accessories

	Description			Color	Type	Part Number		Pkg qty	Weight (1 pce) g
1	**End stops**	5.2 mm	0.205 in	Dark grey	BAZ1	1SNK900002R0000		50	5.30
2	**End sections**	2 mm	0.079 in	Dark grey	EK10	1SNK710910R0000		20	3.30
3	**Jumper bars**	2 poles	76 A (IEC)	Orange	JB10-2	1SNK910302R0000		50	4.60
		3 poles	76 A (IEC)		JB10-3	1SNK910303R0000		50	7.10
		4 poles	76 A (IEC)		JB10-4	1SNK910304R0000		40	9.40
		5 poles	76 A (IEC)		JB10-5	1SNK910305R0000		30	12.00
		10 poles	76 A (IEC)		JB10-10	1SNK910310R0000		20	24.00
4	**Circuit separators**	3 mm	0.118 in	Dark grey	CS-R3	1SNK900107R0000		20	6.40
5	**Test adapters**	For test plugs DIA 2 mm 0.079 in		Dark grey	TP2	1SNK900203R0000		20	1.70
		For test plugs DIA 4 mm 0.157 in			TP4	1SNK900205R0000		20	2.40
6	**Terminal block markers**	Blank marker		White	MG-CPM 13 41791	1SNB041791R0612		1680	0.27
		Blank card			MC812	1SNK160000R0000		22	10.00
					MC812PA	1SNK169999R0000		20	14.00
		Universal wire markers holder		Grey	UMH	1SNK900611R0000		10	0.20

Complete list of accessories is indicated in the terminal block datasheet including end stops.
Some accessories such as jumper bars may modify the terminal block's ratings: Complete information available in the accessories section of the catalog.

Ground PI-Spring terminal blocks

Description		Color	Type	Part Number		Pkg qty	Weight (1 pce) g
Ground	Profile aligned with ZK10	Green-yellow	ZK10-PE	1SNK710150R0000		20	36.20

1SNK162031S0201

Technical data valid for copper conductors only.

ZK10-PV PI-Spring terminal blocks
Feed-through - 12 mm 0.472 in spacing

10 mm²
6 AWG

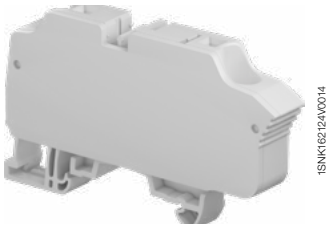
1SNK162124V0014

ZK10-PV

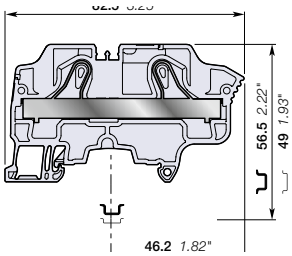

12 mm 0.472 in spacing

Description
Specially designed for high voltage utility scale solar power plants:
- Rated voltage of 1500 V DC IEC and 1000 V DC UL,
- Pre-mounted end section with light grey color specific to this application,
- Improved design with ribs to increase creepage distance,
- Compact solution only 2 mm thicker than normal product,
- Compatible with JB12 jumpers to interconnect multiple terminal blocks.

Ordering details

Description		Color	Type	Part Number		Pkg qty	Weight (1 pce) g
Feed-through	2 connections	Grey	ZK10-PV	1SNK710063R0000		20	29.86
		Blue, grey	ZK10-PV-BL	1SNK710065R0000		20	29.86

Main technical data

Connecting capacity		IEC	UL - CSA
1 conductor per clamp	Rigid - Solid / Stranded	0.5 ... 16 mm²	20 ... 6 AWG
	Flexible	0.5 ... 10 mm²	
	with non insulated ferrule	0.5 ... 10 mm²	20 ... 8 AWG
	with insulated ferrule	0.5 ... 10 mm²	20 ... 8 AWG
2 conductors per clamp	Flexible with twin ferrule	0.5 ... 4 AWG	20 ... 12 AWG
Rated current / Rated cross section		57 A / 10 mm²	55 A / 6 AWG
Rated short-time withstand current (1s)		1200 A	1596 A
Short Circuit Current Rating (with specific conditions)			100 kA
Rated voltage		1000 V AC / 1500 V DC	1000 V
Impulse withstand voltage		8000 V	
Protection		IP20	NEMA 1

Mounting instructions

Rail		TH 35-7.5, TH 35-15
Wire stripping length		15 mm 0.591 in
Tool (for flexible conductor without ferrule)		Flat screwdriver Ø 4 mm Ø 0.157 in

The connecting capacity data for one Rigid - Solid / Stranded - Flexible conductor (when applicable) is a mandatory information required by IEC, UL and CSA standards (Copper conductors). All other data are provided as supplementary information only. For more details, please consult our CB, UL or CSA certificates and technical datasheet available on http://www.TE.com

CE CB RoHS USR CNR CSA EAC

Accessories

	Description			Color	Type	Part Number		Pkg qty	Weight (1 pce) g
1	**End stops**	5.2 mm	0.205 in	Dark grey	BAZ1	1SNK900002R0000		50	5.30
2	**Jumper bars**	2 poles	76 A (IEC)	Orange	JB12-2	1SNK912302R0000		50	4.90
		3 poles	76 A (IEC)		JB12-3	1SNK912303R0000		50	7.60
		5 poles	76 A (IEC)		JB12-5	1SNK912305R0000		20	12.90
3	**Circuit separators**	3 mm	0.118 in	Dark grey	CS-R3	1SNK900107R0000		20	6.40
4	**Test adapters**	For test plugs DIA 2 mm 0.079 in		Dark grey	TP2	1SNK900203R0000		20	1.70
		For test plugs DIA 4 mm 0.157 in			TP4	1SNK900205R0000		20	2.40
5	**Terminal block markers**	Blank card		White	MC812	1SNK160000R0000		22	10.00
					MC812PA	1SNK169999R0000		20	14.00
		Blank marker			MG-CPM 13 41791	1SNB041791R0612		1680	0.273
		Universal wire markers holder		Grey	UMH	1SNK900611R0000		10	0.20

Complete list of accessories is indicated in the terminal block datasheet including end stops. Some accessories such as jumper bars may modify the terminal block's ratings: Complete information available in the accessories section of the catalog.

Ground PI-Spring terminal blocks

Description		Color	Type	Part Number		Pkg qty	Weight (1 pce) g
Ground	Profile aligned with ZK10	Green-yellow	ZK10-PE	1SNK710150R0000		20	36.20

1SNK162080S0201

Technical data valid for copper conductors only.

ZK10-3P PI-Spring terminal blocks

Feed-through with 3 connections - 10 mm 0.394 in spacing

10 mm²
6 AWG

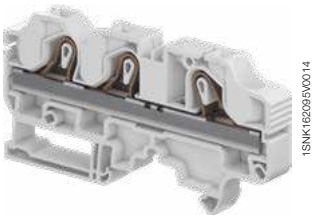

ZK10-3P

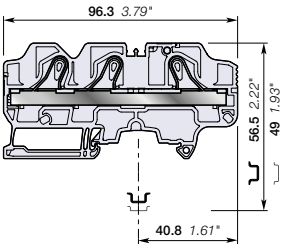

10 mm 0.394 in spacing

Description

- Find all the features of the ZK10 terminal block with the added option of distributing or branching 3 conductors,
- ZK10-3P is perfectly adapted to solar applications: 1250 V DC (1000 V AC) IEC, 1000 V UL.

Ordering details

Description		Color	Type	Part Number		Pkg qty	Weight (1 pce) g
Feed-through	3 connections	Grey	ZK10-3P	1SNK710011R0000		20	34.9
		Blue	ZK10-3P-BL	1SNK710021R0000		20	34.9

Main technical data

Connecting capacity		IEC	UL - CSA
1 conductor per clamp	Rigid - Solid / Stranded	0.5 ... 16 mm²	20 ... 6 AWG
	Flexible	0.5 ... 10 mm²	
	with non insulated ferrule	0.5 ... 10 mm²	20 ... 8 AWG
	with insulated ferrule	0.5 ... 10 mm²	20 ... 8 AWG
2 conductors per clamp	Flexible with twin ferrule	0.5 ... 4 mm²	20 ... 12 AWG
Rated current / Rated cross section		57 A / 10 mm²	56 A / 6 AWG
Rated short-time withstand current (1s)		1200 A	
Short Circuit Current Rating (with specific conditions)			100 kA
Rated voltage		1000 V	1000 V
Impulse withstand voltage		8000 V	
Protection		IP20	NEMA 1
Increased safety Ex e		693 V 57 A - IM2 II 2 GD Ex eb I/II/IIIC	

Mounting instructions

Rail		TH 35-7.5, TH 35-15
Wire stripping length		15 mm 0.591 in
Tool (for flexible conductor without ferrule)		Flat screwdriver Ø 4 mm Ø 0.157 in

The connecting capacity data for one Rigid - Solid / Stranded - Flexible conductor (when applicable) is a mandatory information required by IEC, UL and CSA standards (Copper conductors). All other data are provided as supplementary information only. For more details, please consult our CB, UL or CSA certificates and technical datasheet available on http://www.TE.com

CE, CB, RoHS, USR CNR, CSA, EAC Ex, ATEX, IECEx, BV

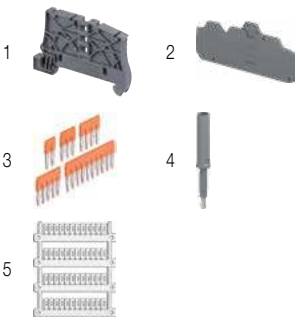

Accessories

	Description			Color	Type	Part Number		Pkg qty	Weight (1 pce) g
1	**End stops**	5.2 mm	0.205 in	Dark grey	BAZ1	1SNK900002R0000		50	5.30
2	**End sections**	2 mm	0.079 in	Dark grey	EK10-3P	1SNK710911R0000		20	4.5
3	**Jumper bars**	2 poles	76 A (IEC)	Orange	JB10-2	1SNK910302R0000		50	4.60
		3 poles	76 A (IEC)		JB10-3	1SNK910303R0000		50	7.10
		4 poles	76 A (IEC)		JB10-4	1SNK910304R0000		40	9.40
		5 poles	76 A (IEC)		JB10-5	1SNK910305R0000		30	12.00
		10 poles	76 A (IEC)		JB10-10	1SNK910310R0000		20	24.00
4	**Test adapters**	For test plugs DIA 2 mm 0.079 in		Dark grey	TP2	1SNK900203R0000		20	1.70
		For test plugs DIA 4 mm 0.157 in			TP4	1SNK900205R0000		20	2.40
5	**Terminal block markers**	Blank marker		White	MG-CPM 13 41791	1SNB041791R0612		1680	0.27
		Blank card			MC812	1SNK160000R0000		22	10.00
					MC812PA	1SNK169999R0000		20	14.00
		Universal wire markers holder		Grey	UMH	1SNK900611R0000		10	0.20

Complete list of accessories is indicated in the terminal block datasheet including end stops.
Some accessories such as jumper bars may modify the terminal block's ratings: Complete information available in the accessories section of the catalog.

Ground PI-Spring terminal blocks

Description		Color	Type	Part Number		Pkg qty	Weight (1 pce) g
Ground	Profile aligned with ZK10-3P	Green-yellow	ZK10-PE-3P	1SNK710151R0000		20	43.3

1SNK162061S0201

Technical data valid for copper conductors only.

ZK10-3P-PV PI-Spring terminal blocks

Feed-through with 3 connections - 12 mm 0.472 in spacing

10 mm²

6 AWG

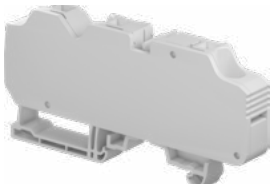

ZK10-3P-PV

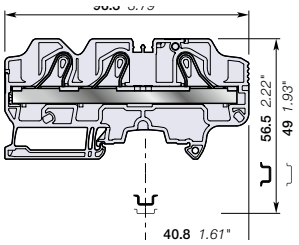

12 mm 0.472 in spacing

Description

Specially designed for high voltage utility scale solar power plants:

- Rated voltage of 1500 V DC IEC and 1000 V DC UL,
- Pre-mounted end section with light grey color specific to this application,
- Improved design with ribs to increase creepage distance,
- Compact solution only 2 mm thicker than normal product,
- 3 connections configuration for easy grouping: 2 inputs / 1 output or 1 input / 2 outputs,
- Compatible with JB12 jumpers to interconnect multiple terminal blocks.

Description		Color	Type	Part Number		Pkg qty	Weight (1 pce) g
Feed-through	3 connections	Grey	ZK10-3P-PV	1SNK710064R0000		20	38.61
		Blue, grey	ZK10-3P-PV-BL	1SNK710067R0000		20	38.61

Main technical data

Connecting capacity		IEC	UL - CSA
1 conductor per clamp	Rigid - Solid / Stranded	0.5 ... 16 mm²	20 ... 6 AWG
	Flexible	0.5 ... 10 mm²	
	with non insulated ferrule	0.5 ... 10 mm²	20 ... 8 AWG
	with insulated ferrule	0.5 ... 10 mm²	20 ... 8 AWG
2 conductors per clamp	Flexible with twin ferrule	0.5 ... 4 AWG	20 ... 12 AWG
Rated current / Rated cross section		57 A / 10 mm²	56 A / 6 AWG
Rated short-time withstand current (1s)		1200 A	1596 A
Short Circuit Current Rating (with specific conditions)			100 kA
Rated voltage		1000 V AC / 1500 V DC	1000 V
Impulse withstand voltage		8000 V	
Protection		IP20	NEMA 1

Mounting instructions

Rail		TH 35-7.5, TH 35-15
Wire stripping length		15 mm 0.591 in
Tool (for flexible conductor without ferrule)		Flat screwdriver Ø 4 mm Ø 0.157 in

The connecting capacity data for one Rigid - Solid / Stranded - Flexible conductor (when applicable) is a mandatory information required by IEC, UL and CSA standards (Copper conductors). All other data are provided as supplementary information only. For more details, please consult our CB, UL or CSA certificates and technical datasheet available on http://www.TE.com

CE CB RoHS USR CNR CSA EAC

Accessories

	Description			Color	Type	Part Number		Pkg qty	Weight (1 pce) g
1	End stops	5.2 mm	0.205 in	Dark grey	BAZ1	1SNK900002R0000		50	5.30
2	Jumper bars	2 poles	76 A (IEC)	Orange	JB12-2	1SNK912302R0000		50	4.90
		3 poles	76 A (IEC)		JB12-3	1SNK912303R0000		50	7.60
		5 poles	76 A (IEC)		JB12-5	1SNK912305R0000		20	12.90
3	Circuit separators	3 mm	0.118 in	Dark grey	CS-R3	1SNK900107R0000		20	6.40
4	Test adapters	For test plugs DIA 2 mm 0.079 in		Dark grey	TP2	1SNK900203R0000		20	1.70
		For test plugs DIA 4 mm 0.157 in			TP4	1SNK900205R0000		20	2.40
5	Terminal block markers	Blank card		White	MC812	1SNK160000R0000		22	10.00
					MC812PA	1SNK169999R0000		20	14.00
		Blank marker			MG-CPM 13 41791	1SNB041791R0612		1680	0.273
		Universal wire markers holder		Grey	UMH	1SNK900611R0000		10	0.20

Complete list of accessories is indicated in the terminal block datasheet including end stops. Some accessories such as jumper bars may modify the terminal block's ratings: Complete information available in the accessories section of the catalog.

Ground PI-Spring terminal blocks

Description		Color	Type	Part Number		Pkg qty	Weight (1 pce) g
Ground	Profile aligned with ZK10-3P	Green-yellow	ZK10-PE-3P	1SNK710151R0000		20	43.3

1SNK162081S0201

Technical data valid for copper conductors only.

ZK16 PI-Spring terminal blocks
Feed-through - 12 mm 0.472 in spacing

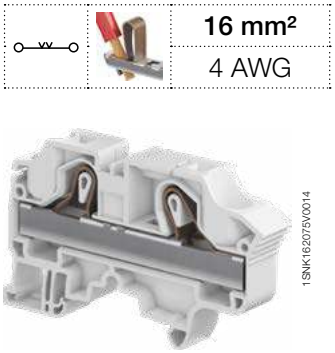

ZK16

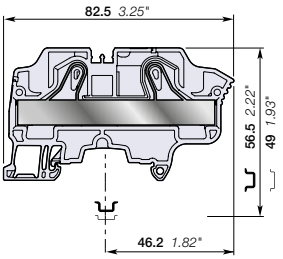

12 mm 0.472 in spacing

16 mm²
4 AWG

Description

Combine high performance with compact dimensions:
- 1000 V AC / DC IEC 600 V UL,
- Opt for the best marking visibility thanks to the up-front, flat marker zone, which lets you mark up to eight digits or increase the font size.

Ordering details

Description		Color	Type	Part Number		Pkg qty	Weight (1 pce) g
Feed-through	2 connections	Grey	ZK16	1SNK712010R0000		20	33.80
		Blue	ZK16-BL	1SNK712020R0000		20	33.80

Main technical data

Connecting capacity		IEC	UL - CSA
1 conductor per clamp	Rigid - Solid / Stranded	0.5 ... 25 mm²	20 ... 4 AWG
	Flexible	0.5 ... 16 mm²	
	with non insulated ferrule	0.5 ... 16 mm²	20 ... 6 AWG
	with insulated ferrule	0.5 ... 16 mm²	20 ... 6 AWG
2 conductors per clamp	Flexible with twin ferrule	0.5 ... 6 mm²	20 ... 10 AWG
Rated current / Rated cross section		76 A / 16 mm²	75 A / 4 AWG
Rated short-time withstand current (1s)		1920 A	2544 A
Short Circuit Current Rating (with specific conditions)			100 kA
Rated voltage		1000 V	600 V
Impulse withstand voltage		8000 V	
Protection		IP20	NEMA 1
Increased safety Ex e		693 V 69 A IEC/EN 60079-7 - IM2 II 2 GD Ex eb I/IIC/IIIC	

Mounting instructions

Rail		TH 35-7.5, TH 35-15
Wire stripping length		15 mm 0.591 in
Tool (for flexible conductor without ferrule)		Flat screwdriver Ø 4 mm Ø 0.157 in

The connecting capacity data for one Rigid - Solid / Stranded - Flexible conductor (when applicable) is a mandatory information required by IEC, UL and CSA standards (Copper conductors).
All other data are provided as supplementary information only. For more details, please consult our CB, UL or CSA certificates and technical datasheet available on http://www.TE.com

CE, CB, RoHS, USR CNR, CSA, EAC Ex, ATEX, IECEx, Haz Loc, BV, DNV

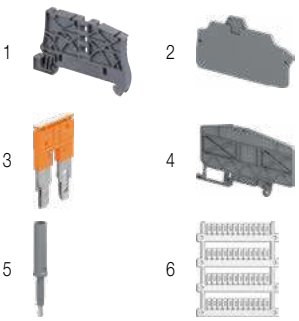

Accessories

	Description			Color	Type	Part Number		Pkg qty	Weight (1 pce) g
1	**End stops**	5.2 mm	0.205 in	Dark grey	BAZ1	1SNK900002R0000		50	5.30
2	**End sections**	2 mm	0.079 in	Dark grey	EK10	1SNK710910R0000		20	3.30
3	**Jumper bars**	2 poles	76 A (IEC)	Orange	JB12-2	1SNK912302R0000		50	4.90
		3 poles	76 A (IEC)		JB12-3	1SNK912303R0000		50	7.60
		5 poles	76 A (IEC)		JB12-5	1SNK912305R0000		20	12.90
4	**Circuit separators**	3 mm	0.118 in	Dark grey	CS-R3	1SNK900107R0000		20	6.40
5	**Test adapters**	For test plugs DIA 2 mm 0.079 in		Dark grey	TP2	1SNK900203R0000		20	1.70
		For test plugs DIA 4 mm 0.157 in			TP4	1SNK900205R0000		20	2.40
6	**Terminal block markers**	Blank marker		White	MG-CPM 13 41791	1SNB041791R0612		1680	0.27
		Blank card			MC812	1SNK160000R0000		22	10.00
					MC812PA	1SNK169999R0000		20	14.00
		Universal wire markers holder		Grey	UMH	1SNK900611R0000		10	0.20

Complete list of accessories is indicated in the terminal block datasheet including end stops.
Some accessories such as jumper bars may modify the terminal block's ratings: Complete information available in the accessories section of the catalog.

Ground PI-Spring terminal blocks

Description		Color	Type	Part Number		Pkg qty	Weight (1 pce) g
Ground	Profile aligned with ZK16	Green-yellow	ZK16-PE	1SNK712150R0000		20	47.00

1SNK162032S0201

Technical data valid for copper conductors only.

ZK16-PV PI-Spring terminal blocks
Feed-through - 14 mm 0.551 in spacing

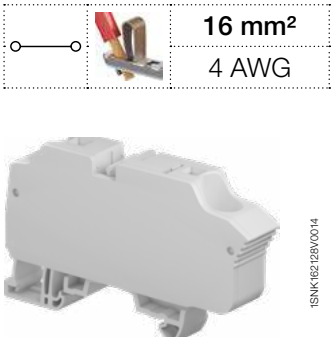

16 mm²
4 AWG

1SNK162128V0014

ZK16-PV

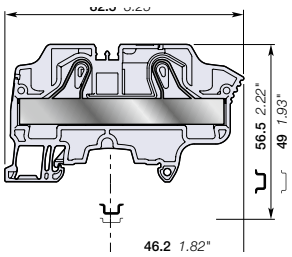

14 mm 0.551 in spacing

Description

Specially designed for high voltage utility scale solar power plants:
- Rated voltage of 1500 V DC IEC and 1000 V DC UL,
- Pre-mounted end section with light grey color specific to this application,
- Improved design with ribs to increase creepage distance,
- Compact solution only 2 mm thicker than normal product,
- No available jumpers for ZK16-PV and ZK16-3P-PV (14 mm spacing).

Ordering details

Description		Color	Type	Part Number		Pkg qty	Weight (1 pce) g
Feed-through	2 connections	Grey	ZK16-PV	1SNK712063R0000		15	36.56
		Blue, grey	ZK16-PV-BL	1SNK712065R0000		15	36.56

Main technical data

Connecting capacity		IEC	UL - CSA
1 conductor per clamp	Rigid - Solid / Stranded	0.5 ... 25 mm²	20 ... 4 AWG
	Flexible	0.5 ... 16 mm²	
	with non insulated ferrule	0.5 ... 16 mm²	20 ... 6 AWG
	with insulated ferrule	0.5 ... 16 mm²	20 ... 6 AWG
2 conductors per clamp	Flexible with twin ferrule	0.5 ... 6 AWG	20 ... 10 AWG
Rated current / Rated cross section		76 A / 16 mm²	75 A / 4 AWG
Rated short-time withstand current (1s)		1920 A	2544 A
Short Circuit Current Rating (with specific conditions)			100 kA
Rated voltage		1000 V AC / 1500 V DC	1000 V
Impulse withstand voltage		8000 V	
Protection		IP20	NEMA 1

Mounting instructions

Rail	TH 35-7.5, TH 35-15
Wire stripping length	15 mm 0.591 in
Tool (for flexible conductor without ferrule)	Flat screwdriver Ø 4 mm Ø 0.157 in

The connecting capacity data for one Rigid - Solid / Stranded - Flexible conductor (when applicable) is a mandatory information required by IEC, UL and CSA standards (Copper conductors). All other data are provided as supplementary information only. For more details, please consult our CB, UL or CSA certificates and technical datasheet available on http://www.TE.com

CE CB RoHS USR CNR CSA EAC

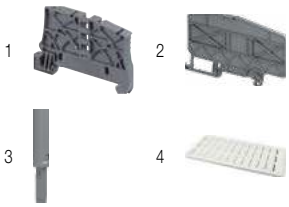

Accessories

	Description			Color	Type	Part Number		Pkg qty	Weight (1 pce) g
1	End stops	5.2 mm	0.205 in	Dark grey	BAZ1	1SNK900002R0000		50	5.30
2	Circuit separators	3 mm	0.118 in	Dark grey	CS-R3	1SNK900107R0000		20	6.40
3	Test adapters	For test plugs DIA 2 mm 0.079 in		Dark grey	TP2	1SNK900203R0000		20	1.70
		For test plugs DIA 4 mm 0.157 in			TP4	1SNK900205R0000		20	2.40
4	Terminal block markers	Blank card		White	MC812	1SNK160000R0000		22	10.00
					MC812PA	1SNK169999R0000		20	14.00
		Blank marker			MG-CPM 13 41791	1SNB041791R0612		1680	0.273
		Universal wire markers holder		Grey	UMH	1SNK900611R0000		10	0.20

Complete list of accessories is indicated in the terminal block datasheet including end stops. Some accessories such as jumper bars may modify the terminal block's ratings: Complete information available in the accessories section of the catalog.

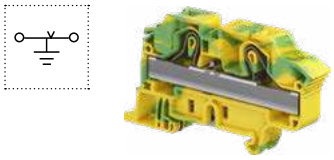

Ground PI-Spring terminal blocks

Description		Color	Type	Part Number		Pkg qty	Weight (1 pce) g
Ground	Profile aligned with ZK16	Green-yellow	ZK16-PE	1SNK712150R0000		20	47.00

1SNK162082S0201

Technical data valid for copper conductors only.

ZK16-3P PI-Spring terminal blocks

Feed-through with 3 connections - 12 mm 0.472 in spacing

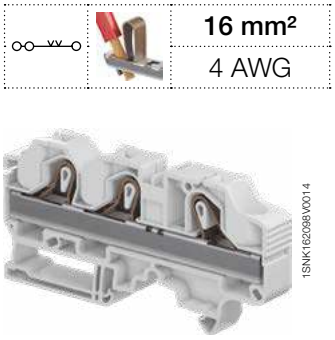

16 mm²
4 AWG

ZK16-3P

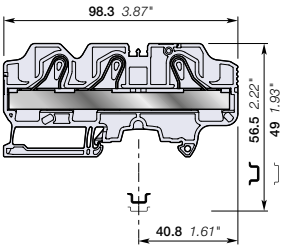

12 mm 0.472 in spacing

Description

- Find all the features of the ZK16 terminal block with the added option of distributing or branching 3 conductors,
- ZK16-3P is perfectly adapted to solar applications: 1250 V DC (1000 V AC) IEC, 1000 V UL.

Ordering details

Description		Color	Type	Part Number		Pkg qty	Weight (1 pce) g
Feed-through	3 connections	Grey	ZK16-3P	1SNK712011R0000		20	44.3
		Blue	ZK16-3P-BL	1SNK712021R0000		20	44.3

Main technical data

Connecting capacity		IEC	UL - CSA
1 conductor per clamp	Rigid - Solid / Stranded	0.5 ... 25 mm²	20 ... 4 AWG
	Flexible	0.5 ... 16 mm²	
	with non insulated ferrule	0.5 ... 16 mm²	20 ... 6 AWG
	with insulated ferrule	0.5 ... 16 mm²	20 ... 6 AWG
2 conductors per clamp	Flexible with twin ferrule	0.5 ... 6 mm²	20 ... 10 AWG
Rated current / Rated cross section		76 A / 16 mm²	75 A / 4 AWG
Rated short-time withstand current (1s)		1920 A	
Short Circuit Current Rating (with specific conditions)			100 kA
Rated voltage		1000 V	1000 V
Impulse withstand voltage		8000 V	
Protection		IP20	NEMA 1
Increased safety Ex e		693 V 76 A - IM2 II 2 GD Ex eb I/II/IIIC	

Mounting instructions

Rail		TH 35-7.5, TH 35-15
Wire stripping length		15 mm 0.591 in
Tool (for flexible conductor without ferrule)		Flat screwdriver Ø 4 mm Ø 0.157 in

The connecting capacity data for one Rigid - Solid / Stranded - Flexible conductor (when applicable) is a mandatory information required by IEC, UL and CSA standards (Copper conductors). All other data are provided as supplementary information only. For more details, please consult our CB, UL or CSA certificates and technical datasheet available on http://www.TE.com

CE, CB, RoHS, USR CNR, CSA, EAC Ex, ATEX, IECEx, BV

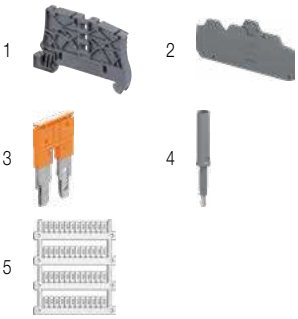

Accessories

	Description			Color	Type	Part Number		Pkg qty	Weight (1 pce) g
1	End stops	5.2 mm	0.205 in	Dark grey	BAZ1	1SNK900002R0000		50	5.30
2	End sections	2 mm	0.079 in	Dark grey	EK10-3P	1SNK710911R0000		20	4.5
3	Jumper bars	2 poles	76 A (IEC)	Orange	JB12-2	1SNK912302R0000		50	4.90
		3 poles	76 A (IEC)		JB12-3	1SNK912303R0000		50	7.60
		5 poles	76 A (IEC)		JB12-5	1SNK912305R0000		20	12.90
4	Test adapters	For test plugs DIA 2 mm 0.079 in		Dark grey	TP2	1SNK900203R0000		20	1.70
		For test plugs DIA 4 mm 0.157 in			TP4	1SNK900205R0000		20	2.40
5	Terminal block markers	Blank marker		White	MG-CPM 13 41791	1SNB041791R0612		1680	0.27
		Blank card			MC812	1SNK160000R0000		22	10.00
					MC812PA	1SNK169999R0000		20	14.00
		Universal wire markers holder		Grey	UMH	1SNK900611R0000		10	0.20

Complete list of accessories is indicated in the terminal block datasheet including end stops.
Some accessories such as jumper bars may modify the terminal block's ratings: Complete information available in the accessories section of the catalog.

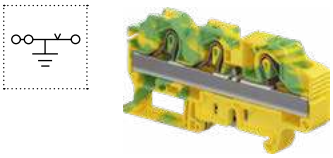

Ground PI-Spring terminal blocks

Description		Color	Type	Part Number		Pkg qty	Weight (1 pce) g
Ground	Profile aligned with ZK16-3P	Green-yellow	ZK16-PE-3P	1SNK712151R0000		20	56.65

1SNK162063S0201

Technical data valid for copper conductors only.

ZK16-3P-PV PI-Spring terminal blocks

Feed-through with 3 connections - 14 mm 0.551 in spacing

16 mm²
4 AWG

1SNK162130V0014

ZK16-3P-PV

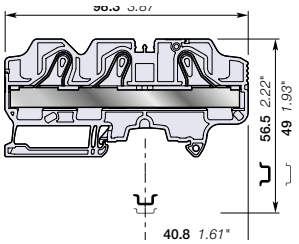

14 mm 0.551 in spacing

Description

Specially designed for high voltage utility scale solar power plants:

- Rated voltage of 1500 V DC IEC and 1000 V DC UL,
- Pre-mounted end section with light grey color specific to this application,
- Improved design with ribs to increase creepage distance,
- Compact solution only 2 mm thicker than normal product,
- 3 connections configuration for easy grouping: 2 inputs / 1 output or 1 input / 2 outputs,
- No available jumpers for ZK16-PV and ZK16-3P-PV (14 mm spacing).

Ordering details

Description		Color	Type	Part Number		Pkg qty	Weight (1 pce) g
Feed-through	3 connections	Grey	ZK16-3P-PV	1SNK712064R0000		15	48.01
		Blue, grey	ZK16-3P-PV-BL	1SNK712067R0000		15	48.01

Main technical data

Connecting capacity		IEC	UL - CSA
1 conductor per clamp	Rigid - Solid / Stranded	0.5 ... 25 mm²	20 ... 4 AWG
	Flexible	0.5 ... 16 mm²	
	with non insulated ferrule	0.5 ... 16 mm²	20 ... 6 AWG
	with insulated ferrule	0.5 ... 16 mm²	20 ... 6 AWG
2 conductors per clamp	Flexible with twin ferrule	0.5 ... 6 AWG	20 ... 10 AWG
Rated current / Rated cross section		76 A / 16 mm²	75 A / 4 AWG
Rated short-time withstand current (1s)		1920 A	2544 A
Short Circuit Current Rating (with specific conditions)			100 kA
Rated voltage		1000 V AC / 1500 V DC	1000 V
Impulse withstand voltage		8000 V	
Protection		IP20	NEMA 1

Mounting instructions

Rail	TH 35-7.5, TH 35-15
Wire stripping length	15 mm 0.591 in
Tool (for flexible conductor without ferrule)	Flat screwdriver Ø 4 mm Ø 0.157 in

The connecting capacity data for one Rigid - Solid / Stranded - Flexible conductor (when applicable) is a mandatory information required by IEC, UL and CSA standards (Copper conductors).
All other data are provided as supplementary information only. For more details, please consult our CB, UL or CSA certificates and technical datasheet available on http://www.TE.com

CE CB RoHS USR CNR CSA EAC

Accessories

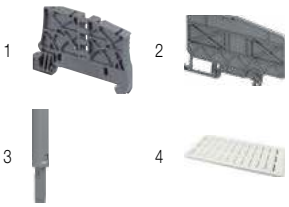

	Description			Color	Type	Part Number		Pkg qty	Weight (1 pce) g
1	End stops	5.2 mm	0.205 in	Dark grey	BAZ1	1SNK900002R0000		50	5.30
2	Circuit separators	3 mm	0.118 in	Dark grey	CS-R3	1SNK900107R0000		20	6.40
3	Test adapters	For test plugs DIA 2 mm 0.079 in		Dark grey	TP2	1SNK900203R0000		20	1.70
		For test plugs DIA 4 mm 0.157 in			TP4	1SNK900205R0000		20	2.40
4	Terminal block markers	Blank card		White	MC812	1SNK160000R0000		22	10.00
					MC812PA	1SNK169999R0000		20	14.00
		Blank marker			MG-CPM 13 41791	1SNB041791R0612		1680	0.273
		Universal wire markers holder		Grey	UMH	1SNK900611R0000		10	0.20

Complete list of accessories is indicated in the terminal block datasheet including end stops.
Some accessories such as jumper bars may modify the terminal block's ratings: Complete information available in the accessories section of the catalog.

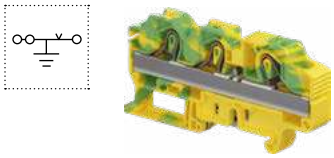

Ground PI-Spring terminal blocks

Description		Color	Type	Part Number		Pkg qty	Weight (1 pce) g
Ground	Profile aligned with ZK16-3P	Green-yellow	ZK16-PE-3P	1SNK712151R0000		20	56.65

1SNK162083S0201

Technical data valid for copper conductors only.

ZK2.5-PE PI-Spring terminal blocks
Ground - 5.2 mm 0.205 in spacing

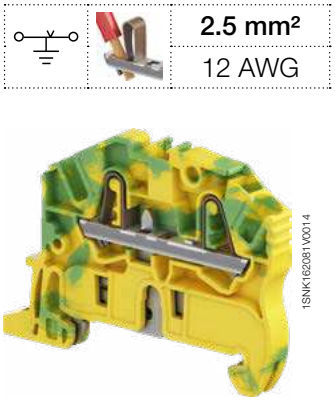

2.5 mm²	
12 AWG	

ZK2.5-PE

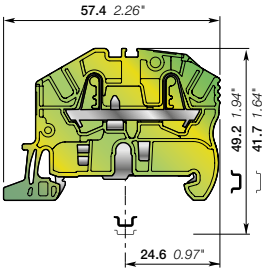

5.2 mm 0.205 in spacing

Description

Improve the safety of your installation in the event of a short-circuit thanks to our screwless rail contact:
- Rail contact non operator dependent,
- Performances above the requirements of the IEC 60947-7-2 terminal block standard,
- Secured snap on or off the rail,
- Profile aligned with ZK2.5.

Ordering details

Description		Color	Type	Part Number		Pkg qty	Weight (1 pce) g
Ground	2 connections	Green-yellow	ZK2.5-PE	1SNK705150R0000		20	10.00

Main technical data

Connecting capacity		IEC	UL - CSA
1 conductor per clamp	Rigid - Solid / Stranded	0.2 ... 4 mm²	26 ... 12 AWG
	Flexible	0.22 ... 2.5 mm²	
	with non insulated ferrule	0.22 ... 2.5 mm²	26 ... 14 AWG
	with insulated ferrule	0.22 ... 2.5 mm²	26 ... 14 AWG
Rated cross section		2.5 mm²	12 AWG
Rated short-time withstand current (1s)		300 A	396 A
Protection		IP20	NEMA 1
Explosive atmosphere classification		IM2 II 2 GD Ex eb I/IIC/IIIC – Class I, Zone 1, AEx e II, Ex e II U	

Mounting instructions

Rail		TH 35-7.5, TH 35-15
Wire stripping length		11 mm 0.433 in
Tool (for flexible conductor without ferrule)		Flat screwdriver Ø 3.5 mm Ø 0.138 in

The connecting capacity data for one Rigid - Solid / Stranded - Flexible conductor (when applicable) is a mandatory information required by IEC, UL and CSA standards (Copper conductors). All other data are provided as supplementary information only. For more details, please consult our CB, UL or CSA certificates and technical datasheet available on http://www.TE.com

CE, CB, RoHS, USR CNR, CSA, EAC Ex, ATEX, IECEx, Haz Loc, BV, DNV

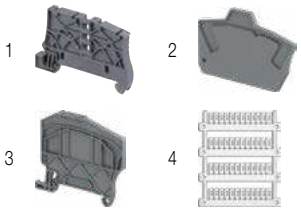

Accessories

	Description			Color	Type	Part Number		Pkg qty	Weight (1 pce) g
1	**End stops**	5.2 mm	0.205 in	Dark grey	BAZ1	1SNK900002R0000		50	5.30
2	**End sections**	2 mm	0.079 in	Dark grey	EK2.5	1SNK705910R0000		20	1.80
3	**Circuit separators**	3 mm	0.118 in	Dark grey	CS-R2	1SNK900106R0000		20	3.80
4	**Terminal block markers**	Blank marker		White	MG-CPM 13 41790	1SNB041790R0512		1960	0.23
		Blank card			MC512	1SNK140000R0000		22	9.00
					MC512PA	1SNK149999R0000		20	10.00
		Universal wire markers holder		Grey	UMH	1SNK900611R0000		10	0.20

Complete list of accessories is indicated in the terminal block datasheet including end stops.
Some accessories such as jumper bars may modify the terminal block's ratings: Complete information available in the accessories section of the catalog.

1SNK162039S0201

Technical data valid for copper conductors only.

ZK2.5-PE-3P PI-Spring terminal blocks

Ground with 3 connections - 5.2 mm 0.205 in spacing

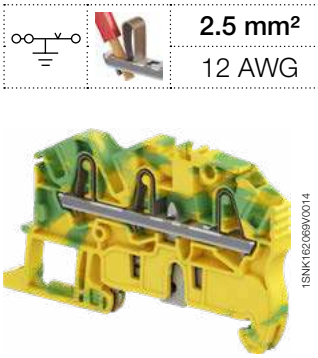

ZK2.5-PE-3P

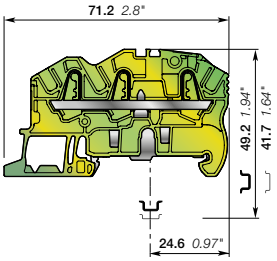

5.2 mm 0.205 in spacing

2.5 mm²	
12 AWG	

Description

Improve the safety of your installation in the event of a short-circuit thanks to our screwless rail contact:

- Rail contact non operator dependent,
- Performances above the requirements of the IEC 60947-7-2 terminal block standard,
- Secured snap on or off the rail,
- Profile aligned with ZK2.5-3P.

Ordering details

Description		Color	Type	Part Number		Pkg qty	Weight (1 pce) g
Ground	3 connections	Green-yellow	ZK2.5-PE-3P	1SNK705151R0000		20	11.90

Main technical data

Connecting capacity		IEC	UL - CSA
1 conductor per clamp	Rigid - Solid / Stranded	0.2 ... 4 mm²	26 ... 12 AWG
	Flexible	0.22 ... 2.5 mm²	
	with non insulated ferrule	0.22 ... 2.5 mm²	26 ... 14 AWG
	with insulated ferrule	0.22 ... 2.5 mm²	26 ... 14 AWG
Rated cross section		2.5 mm²	12 AWG
Rated short-time withstand current (1s)		300 A	396 A
Protection		IP20	NEMA 1
Explosive atmosphere classification		IM2 II 2 GD Ex eb I/IIC/IIIC – Class I, Zone 1, AEx e II, Ex e II U	

Mounting instructions

Rail	TH 35-7.5, TH 35-15
Wire stripping length	11 mm 0.433 in
Tool (for flexible conductor without ferrule)	Flat screwdriver Ø 3.5 mm Ø 0.138 in

The connecting capacity data for one Rigid - Solid / Stranded - Flexible conductor (when applicable) is a mandatory information required by IEC, UL and CSA standards (Copper conductors). All other data are provided as supplementary information only. For more details, please consult our CB, UL or CSA certificates and technical datasheet available on http://www.TE.com

CE, CB, RoHS, USR CNR, CSA, EAC Ex, ATEX, IECEx, Haz Loc, BV, DNV

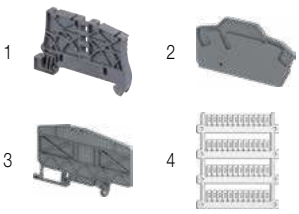

Accessories

	Description			Color	Type	Part Number		Pkg qty	Weight (1 pce) g
1	**End stops**	5.2 mm	0.205 in	Dark grey	BAZ1	1SNK900002R0000		50	5.30
2	**End sections**	2 mm	0.079 in	Dark grey	EK2.5-3P	1SNK705911R0000		20	2.40
3	**Circuit separators**	3 mm	0.118 in	Dark grey	CS-R3	1SNK900107R0000		20	6.40
4	**Terminal block markers**	Blank marker		White	MG-CPM 13 41790	1SNB041790R0512		1960	0.23
		Blank card			MC512	1SNK140000R0000		22	9.00
					MC512PA	1SNK149999R0000		20	10.00
		Universal wire markers holder		Grey	UMH	1SNK900611R0000		10	0.20

Complete list of accessories is indicated in the terminal block datasheet including end stops.
Some accessories such as jumper bars may modify the terminal block's ratings: Complete information available in the accessories section of the catalog.

1SNK162040S0201

Technical data valid for copper conductors only.

ZK2.5-PE-4P PI-Spring terminal blocks

Ground with 4 connections - 5.2 mm 0.205 in spacing

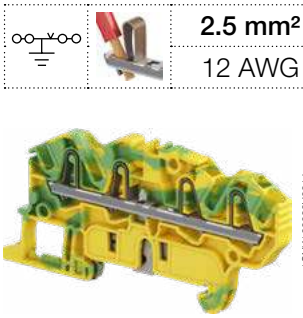

ZK2.5-PE-4P

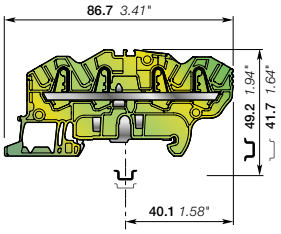

5.2 mm 0.205 in spacing

	2.5 mm²
	12 AWG

Description

Improve the safety of your installation in the event of a short-circuit thanks to our screwless rail contact:

- Rail contact non operator dependent,
- Performances above the requirements of the IEC 60947-7-2 terminal block standard,
- Secured snap on or off the rail,
- Profile aligned with ZK2.5-4P.

Ordering details

Description		Color	Type	Part Number		Pkg qty	Weight (1 pce) g
Ground	4 connections	Green-yellow	ZK2.5-PE-4P	1SNK705152R0000		20	13.60

Main technical data

Connecting capacity		IEC	UL - CSA
1 conductor per clamp	Rigid - Solid / Stranded	0.2 ... 4 mm²	26 ... 12 AWG
	Flexible	0.22 ... 2.5 mm²	
	with non insulated ferrule	0.22 ... 2.5 mm²	26 ... 14 AWG
	with insulated ferrule	0.22 ... 2.5 mm²	26 ... 14 AWG
Rated cross section		2.5 mm²	12 AWG
Rated short-time withstand current (1s)		300 A	396 A
Protection		IP20	NEMA 1
Explosive atmosphere classification		IM2 II 2 GD Ex eb I/IIC/IIIC – Class I, Zone 1, AEx e II, Ex e II U	

The connecting capacity data for one Rigid - Solid / Stranded - Flexible conductor (when applicable) is a mandatory information required by IEC, UL and CSA standards (Copper conductors). All other data are provided as supplementary information only. For more details, please consult our CB, UL or CSA certificates and technical datasheet available on http://www.TE.com

Mounting instructions

Rail	TH 35-7.5, TH 35-15
Wire stripping length	11 mm 0.433 in
Tool (for flexible conductor without ferrule)	Flat screwdriver Ø 3.5 mm Ø 0.138 in

CE, CB, RoHS, USR CNR, CSA, EAC Ex, ATEX, IECEx, Haz Loc, BV, DNV

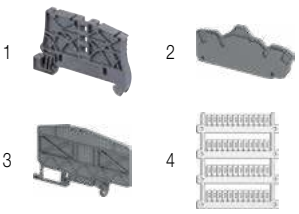

Accessories

	Description			Color	Type	Part Number		Pkg qty	Weight (1 pce) g
1	**End stops**	5.2 mm	0.205 in	Dark grey	BAZ1	1SNK900002R0000		50	5.30
2	**End sections**	2 mm	0.079 in	Dark grey	EK2.5-4P	1SNK705912R0000		20	2.70
3	**Circuit separators**	3 mm	0.118 in	Dark grey	CS-R3	1SNK900107R0000		20	6.40
4	**Terminal block markers**	Blank marker		White	MG-CPM 13 41790	1SNB041790R0512		1960	0.23
		Blank card			MC512	1SNK140000R0000		22	9.00
					MC512PA	1SNK149999R0000		20	10.00
		Universal wire markers holder		Grey	UMH	1SNK900611R0000		10	0.20

Complete list of accessories is indicated in the terminal block datasheet including end stops.
Some accessories such as jumper bars may modify the terminal block's ratings: Complete information available in the accessories section of the catalog.

1SNK162041S0201

Technical data valid for copper conductors only.

ZK4-PE PI-Spring terminal blocks
Ground - 6 mm 0.236 in spacing

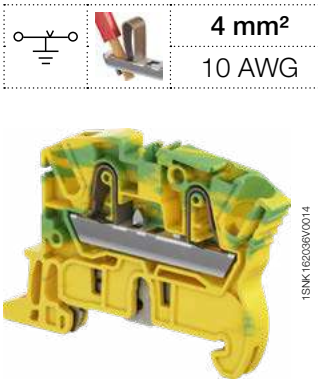

ZK4-PE

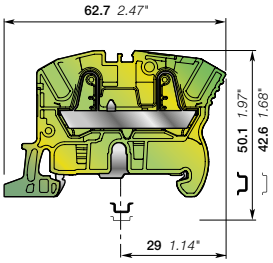

6 mm 0.236 in spacing

4 mm²
10 AWG

Description

Improve the safety of your installation in the event of a short-circuit thanks to our screwless rail contact:
- Rail contact non operator dependent,
- Performances above the requirements of the IEC 60947-7-2 terminal block standard,
- Secured snap on or off the rail,
- Profile aligned with ZK4.

Ordering details

Description		Color	Type	Part Number		Pkg qty	Weight (1 pce) g
Ground	2 connections	Green-yellow	ZK4-PE	1SNK706150R0000		20	12.60

Main technical data

Connecting capacity		IEC	UL - CSA
1 conductor per clamp	Rigid - Solid / Stranded	0.5 ... 6 mm²	26 ... 10 AWG
	Flexible	0.5 ... 4 mm²	
	with non insulated ferrule	0.5 ... 4 mm²	26 ... 12 AWG
	with insulated ferrule	0.5 ... 4 mm²	26 ... 12 AWG
Rated cross section		4 mm²	10 AWG
Rated short-time withstand current (1s)		480 A	636 A
Protection		IP20	NEMA 1
Explosive atmosphere classification		IM2 II 2 GD Ex eb I/IIC/IIIC – Class I, Zone 1, AEx e II, Ex e II U	

Mounting instructions

Rail		TH 35-7.5, TH 35-15
Wire stripping length		12.5 mm 0.492 in
Tool (for flexible conductor without ferrule)		Flat screwdriver Ø 3.5 mm Ø 0.138 in

The connecting capacity data for one Rigid - Solid / Stranded - Flexible conductor (when applicable) is a mandatory information required by IEC, UL and CSA standards (Copper conductors). All other data are provided as supplementary information only. For more details, please consult our CB, UL or CSA certificates and technical datasheet available on http://www.TE.com

CE, CB, RoHS, USR CNR, CSA, EAC Ex, ATEX, IECEx, Haz Loc, BV, DNV

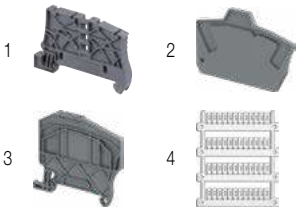

Accessories

	Description			Color	Type	Part Number		Pkg qty	Weight (1 pce) g
1	**End stops**	5.2 mm	0.205 in	Dark grey	BAZ1	1SNK900002R0000		50	5.30
2	**End sections**	2 mm	0.079 in	Dark grey	EK2.5	1SNK705910R0000		20	1.80
3	**Circuit separators**	3 mm	0.118 in	Dark grey	CS-R2	1SNK900106R0000		20	3.80
4	**Terminal block markers**	Blank marker		White	MG-CPM 13 41791	1SNB041791R0612		1680	0.27
		Blank card			MC612	1SNK150000R0000		22	10.00
					MC612PA	1SNK159999R0000		20	11.00
		Universal wire markers holder		Grey	UMH	1SNK900611R0000		10	0.20

Complete list of accessories is indicated in the terminal block datasheet including end stops.
Some accessories such as jumper bars may modify the terminal block's ratings: Complete information available in the accessories section of the catalog.

1SNK162042S0201

Technical data valid for copper conductors only.

ZK4-PE-3P PI-Spring terminal blocks

Ground with 3 connections - 6 mm 0.236 in spacing

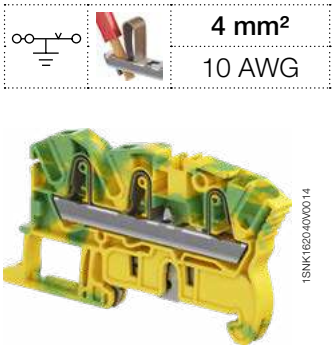

4 mm²	
10 AWG	

1SNK162040V0014

ZK4-PE-3P

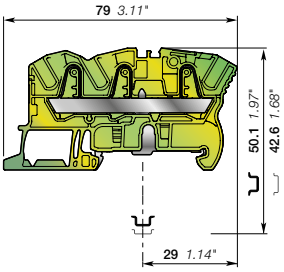

6 mm 0.236 in spacing

Description

Improve the safety of your installation in the event of a short-circuit thanks to our screwless rail contact:

- Rail contact non operator dependent,
- Performances above the requirements of the IEC 60947-7-2 terminal block standard,
- Secured snap on or off the rail,
- Profile aligned with ZK4-3P.

Ordering details

Description		Color	Type	Part Number		Pkg qty	Weight (1 pce) g
Ground	3 connections	Green-yellow	ZK4-PE-3P	1SNK706151R0000		20	15.70

Main technical data

Connecting capacity		IEC	UL - CSA
1 conductor per clamp	Rigid - Solid / Stranded	0.5 ... 6 mm²	26 ... 10 AWG
	Flexible	0.5 ... 4 mm²	
	with non insulated ferrule	0.5 ... 4 mm²	26 ... 12 AWG
	with insulated ferrule	0.5 ... 4 mm²	26 ... 12 AWG
Rated cross section		4 mm²	10 AWG
Rated short-time withstand current (1s)		480 A	636 A
Protection		IP20	NEMA 1
Explosive atmosphere classification		IM2 II 2 GD Ex eb I/IIC/IIIC – Class I, Zone 1, AEx e II, Ex e II U	

Mounting instructions

Rail		TH 35-7.5, TH 35-15
Wire stripping length		12.5 mm 0.492 in
Tool (for flexible conductor without ferrule)		Flat screwdriver Ø 3.5 mm Ø 0.138 in

The connecting capacity data for one Rigid - Solid / Stranded - Flexible conductor (when applicable) is a mandatory information required by IEC, UL and CSA standards (Copper conductors). All other data are provided as supplementary information only. For more details, please consult our CB, UL or CSA certificates and technical datasheet available on http://www.TE.com

CE, CB, RoHS, USR CNR, CSA, EAC Ex, ATEX, IECEx, Haz Loc, BV, DNV

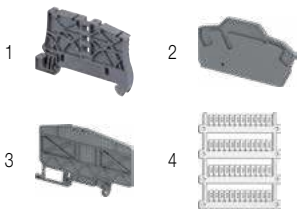

Accessories

	Description			Color	Type	Part Number		Pkg qty	Weight (1 pce) g
1	**End stops**	5.2 mm	0.205 in	Dark grey	BAZ1	1SNK900002R0000		50	5.30
2	**End sections**	2 mm	0.079 in	Dark grey	EK2.5-3P	1SNK705911R0000		20	2.40
3	**Circuit separators**	3 mm	0.118 in	Dark grey	CS-R3	1SNK900107R0000		20	6.40
4	**Terminal block markers**	Blank marker		White	MG-CPM 13 41791	1SNB041791R0612		1680	0.27
		Blank card			MC612	1SNK150000R0000		22	10.00
					MC612PA	1SNK159999R0000		20	11.00
		Universal wire markers holder		Grey	UMH	1SNK900611R0000		10	0.20

Complete list of accessories is indicated in the terminal block datasheet including end stops.
Some accessories such as jumper bars may modify the terminal block's ratings: Complete information available in the accessories section of the catalog.

1SNK162043S0201

Technical data valid for copper conductors only.

ZK4-PE-4P PI-Spring terminal blocks

Ground with 4 connections - 6 mm 0.236 in spacing

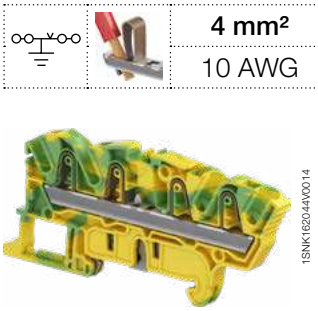

ZK4-PE-4P

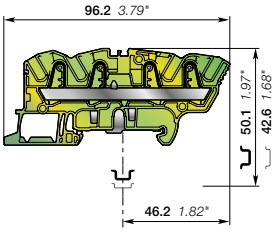

6 mm 0.236 in spacing

	4 mm²
	10 AWG

Description

Improve the safety of your installation in the event of a short-circuit thanks to our screwless rail contact:

- Rail contact non operator dependent,
- Performances above the requirements of the IEC 60947-7-2 terminal block standard,
- Secured snap on or off the rail,
- Profile aligned with ZK4-4P.

Ordering details

Description		Color	Type	Part Number		Pkg qty	Weight (1 pce) g
Ground	4 connections	Green-yellow	ZK4-PE-4P	1SNK706152R0000		20	18.40

Main technical data

Connecting capacity		IEC	UL - CSA
1 conductor per clamp	Rigid - Solid / Stranded	0.5 ... 6 mm²	26 ... 10 AWG
	Flexible	0.5 ... 4 mm²	
	with non insulated ferrule	0.5 ... 4 mm²	26 ... 12 AWG
	with insulated ferrule	0.5 ... 4 mm²	26 ... 12 AWG
Rated cross section		4 mm²	10 AWG
Rated short-time withstand current (1s)		480 A	636 A
Protection		IP20	NEMA 1
Explosive atmosphere classification		IM2 II 2 GD Ex eb I/IIC/IIIC – Class I, Zone 1, AEx e II, Ex e II U	

Mounting instructions

Rail	TH 35-7.5, TH 35-15
Wire stripping length	12.5 mm 0.492 in
Tool (for flexible conductor without ferrule)	Flat screwdriver Ø 3.5 mm Ø 0.138 in

The connecting capacity data for one Rigid - Solid / Stranded - Flexible conductor (when applicable) is a mandatory information required by IEC, UL and CSA standards (Copper conductors). All other data are provided as supplementary information only. For more details, please consult our CB, UL or CSA certificates and technical datasheet available on http://www.TE.com

CE, CB, RoHS, USR CNR, CSA, EAC Ex, ATEX, IECEx, Haz Loc, BV, DNV

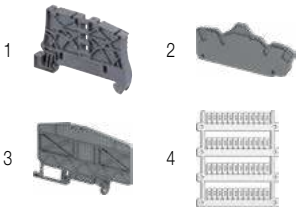

Accessories

	Description			Color	Type	Part Number		Pkg qty	Weight (1 pce) g
1	**End stops**	5.2 mm	0.205 in	Dark grey	BAZ1	1SNK900002R0000		50	5.30
2	**End sections**	2 mm	0.079 in	Dark grey	EK2.5-4P	1SNK705912R0000		20	2.70
3	**Circuit separators**	3 mm	0.118 in	Dark grey	CS-R3	1SNK900107R0000		20	6.40
4	**Terminal block markers**	Blank marker		White	MG-CPM 13 41791	1SNB041791R0612		1680	0.27
		Blank card			MC612	1SNK150000R0000		22	10.00
					MC612PA	1SNK159999R0000		20	11.00
		Universal wire markers holder		Grey	UMH	1SNK900611R0000		10	0.20

Complete list of accessories is indicated in the terminal block datasheet including end stops.
Some accessories such as jumper bars may modify the terminal block's ratings: Complete information available in the accessories section of the catalog.

1SNK162044S0201

Technical data valid for copper conductors only.

ZK6-PE PI-Spring terminal blocks
Ground - 8 mm 0.315 in spacing

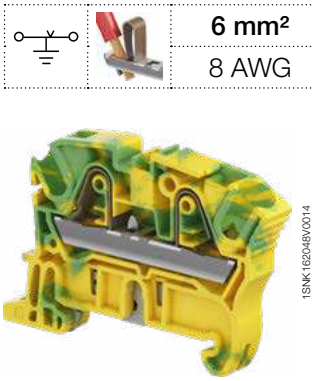

ZK6-PE

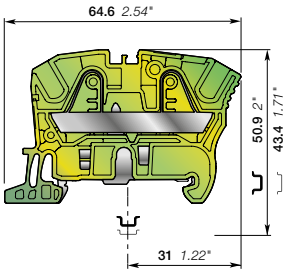

8 mm 0.315 in spacing

	6 mm²
	8 AWG

Description

Improve the safety of your installation in the event of a short-circuit thanks to our screwless rail contact:
- Rail contact non operator dependent,
- Performances above the requirements of the IEC 60947-7-2 terminal block standard,
- Secured snap on or off the rail,
- Profile aligned with ZK6.

Ordering details

Description		Color	Type	Part Number		Pkg qty	Weight (1 pce) g
Ground	2 connections	Green-yellow	ZK6-PE	1SNK708150R0000		20	20.30

Main technical data

Connecting capacity		IEC	UL - CSA
1 conductor per clamp	Rigid - Solid / Stranded	0.5 ... 10 mm²	24 ... 8 AWG
	Flexible	0.5 ... 6 mm²	
	with non insulated ferrule	0.5 ... 6 mm²	24 ... 10 AWG
	with insulated ferrule	0.5 ... 6 mm²	24 ... 10 AWG
Rated cross section		6 mm²	8 AWG
Rated short-time withstand current (1s)		720 A	1008 A
Protection		IP20	NEMA 1
Explosive atmosphere classification		IM2 II 2 GD Ex eb I/IIC/IIIC – Class I, Zone 1, AEx e II, Ex e II U	

Mounting instructions

Rail		TH 35-7.5, TH 35-15
Wire stripping length		12.5 mm 0.492 in
Tool (for flexible conductor without ferrule)		Flat screwdriver Ø 3.5 mm Ø 0.138 in

The connecting capacity data for one Rigid - Solid / Stranded - Flexible conductor (when applicable) is a mandatory information required by IEC, UL and CSA standards (Copper conductors). All other data are provided as supplementary information only. For more details, please consult our CB, UL or CSA certificates and technical datasheet available on http://www.TE.com

CE, CB, RoHS, USR CNR, CSA, EAC Ex, ATEX, IECEx, Haz Loc, BV, DNV

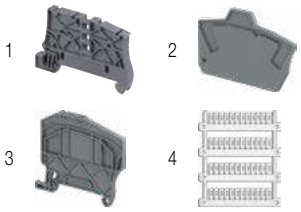

Accessories

	Description			Color	Type	Part Number		Pkg qty	Weight (1 pce) g
1	**End stops**	5.2 mm	0.205 in	Dark grey	BAZ1	1SNK900002R0000		50	5.30
2	**End sections**	2 mm	0.079 in	Dark grey	EK2.5	1SNK705910R0000		20	1.80
3	**Circuit separators**	3 mm	0.118 in	Dark grey	CS-R2	1SNK900106R0000		20	3.80
4	**Terminal block markers**	Blank marker		White	MG-CPM 13 41791	1SNB041791R0612		1680	0.27
		Blank card			MC812	1SNK160000R0000		22	10.00
					MC812PA	1SNK169999R0000		20	14.00
		Universal wire markers holder		Grey	UMH	1SNK900611R0000		10	0.20

Complete list of accessories is indicated in the terminal block datasheet including end stops.
Some accessories such as jumper bars may modify the terminal block's ratings: Complete information available in the accessories section of the catalog.

1SNK162045S0201

Technical data valid for copper conductors only.

ZK6-PE-3P PI-Spring terminal blocks

Ground with 3 connections - 8 mm 0.315 in spacing

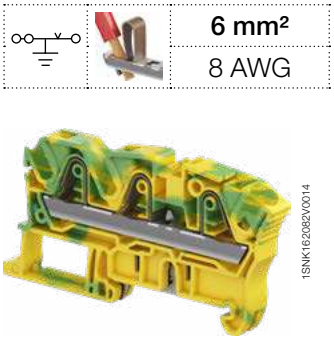

6 mm²
8 AWG

1SNK162082V0014

ZK6-PE-3P

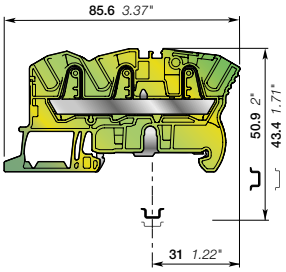

8 mm 0.315 in spacing

Description

Improve the safety of your installation in the event of a short-circuit thanks to our screwless rail contact:

- Rail contact non operator dependent,
- Performances above the requirements of the IEC 60947-7-2 terminal block standard,
- Secured snap on or off the rail,
- Profile aligned with ZK6-3P.

Ordering details

Description		Color	Type	Part Number		Pkg qty	Weight (1 pce) g
Ground	3 connections	Green-yellow	ZK6-PE-3P	1SNK708151R0000		20	21.50

Main technical data

Connecting capacity		IEC	UL - CSA
1 conductor per clamp	Rigid - Solid / Stranded	0.5 ... 10 mm²	24 ... 8 AWG
	Flexible	0.5 ... 6 mm²	
	with non insulated ferrule	0.5 ... 6 mm²	24 ... 10 AWG
	with insulated ferrule	0.5 ... 6 mm²	24 ... 10 AWG
Rated cross section		6 mm²	8 AWG
Rated short-time withstand current (1s)		720 A	1008 A
Protection		IP20	NEMA 1
Explosive atmosphere classification		IM2 II 2 GD Ex eb I/IIC/IIIC – Class I, Zone 1, AEx e II, Ex e II U	

The connecting capacity data for one Rigid - Solid / Stranded - Flexible conductor (when applicable) is a mandatory information required by IEC, UL and CSA standards (Copper conductors). All other data are provided as supplementary information only. For more details, please consult our CB, UL or CSA certificates and technical datasheet available on http://www.TE.com

CE, CB, RoHS, USR CNR, CSA, EAC Ex, ATEX, IECEx, Haz Loc, BV, DNV

Mounting instructions

Rail		TH 35-7.5, TH 35-15
Wire stripping length		12.5 mm 0.492 in
Tool (for flexible conductor without ferrule)		Flat screwdriver Ø 3.5 mm Ø 0.138 in

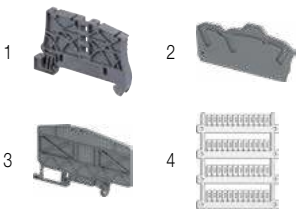

Accessories

	Description			Color	Type	Part Number		Pkg qty	Weight (1 pce) g
1	**End stops**	5.2 mm	0.205 in	Dark grey	BAZ1	1SNK900002R0000		50	5.30
2	**End sections**	2 mm	0.079 in	Dark grey	EK6-3P	1SNK708911R0000		20	2.80
3	**Circuit separators**	3 mm	0.118 in	Dark grey	CS-R3	1SNK900107R0000		20	6.40
4	**Terminal block markers**	Blank marker		White	MG-CPM 13 41791	1SNB041791R0612		1680	0.27
		Blank card			MC812	1SNK160000R0000		22	10.00
					MC812PA	1SNK169999R0000		20	14.00
		Universal wire markers holder		Grey	UMH	1SNK900611R0000		10	0.20

Complete list of accessories is indicated in the terminal block datasheet including end stops.
Some accessories such as jumper bars may modify the terminal block's ratings: Complete information available in the accessories section of the catalog.

1SNK162046S0201

Technical data valid for copper conductors only.

ZK10-PE PI-Spring terminal blocks
Ground - 10 mm 0.394 in spacing

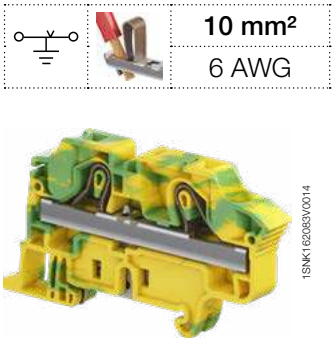

10 mm²	
6 AWG	

ZK10-PE

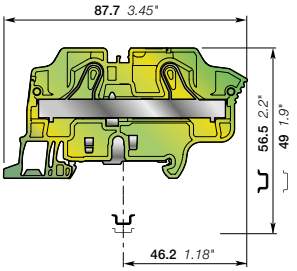

10 mm 0.394 in spacing

Description

Improve the safety of your installation in the event of a short-circuit thanks to our screwless rail contact:
- Rail contact non operator dependent,
- Performances above the requirements of the IEC 60947-7-2 terminal block standard,
- Secured snap on or off the rail,
- Profile aligned with ZK10.

Ordering details

Description		Color	Type	Part Number		Pkg qty	Weight (1 pce) g
Ground	2 connections	Green-yellow	ZK10-PE	1SNK710150R0000		20	36.20

Main technical data

Connecting capacity		IEC	UL - CSA
1 conductor per clamp	Rigid - Solid / Stranded	0.5 ... 16 mm²	20 ... 6 AWG
	Flexible	0.5 ... 10 mm²	
	with non insulated ferrule	0.5 ... 10 mm²	20 ... 8 AWG
	with insulated ferrule	0.5 ... 10 mm²	20 ... 8 AWG
Rated cross section		10 mm²	6 AWG
Rated short-time withstand current (1s)		1200 A	1596 A
Protection		IP20	NEMA 1
Explosive atmosphere classification		IM2 II 2 GD Ex eb I/IIC/IIIC – Class I, Zone 1, AEx e II, Ex e II U	

Mounting instructions

Rail	TH 35-7.5, TH 35-15
Wire stripping length	15 mm 0.591 in
Tool (for flexible conductor without ferrule)	Flat screwdriver Ø 4 mm Ø 0.157 in

The connecting capacity data for one Rigid - Solid / Stranded - Flexible conductor (when applicable) is a mandatory information required by IEC, UL and CSA standards (Copper conductors). All other data are provided as supplementary information only. For more details, please consult our CB, UL or CSA certificates and technical datasheet available on http://www.TE.com

CE, CB, RoHS, USR CNR, CSA, EAC Ex, ATEX, IECEx, Haz Loc, BV, DNV

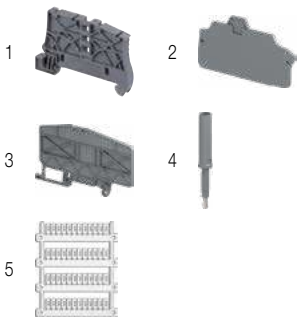

Accessories

	Description			Color	Type	Part Number		Pkg qty	Weight (1 pce) g
1	End stops	5.2 mm	0.205 in	Dark grey	BAZ1	1SNK900002R0000		50	5.30
2	End sections	2 mm	0.079 in	Dark grey	EK10	1SNK710910R0000		20	3.30
3	Circuit separators	3 mm	0.118 in	Dark grey	CS-R3	1SNK900107R0000		20	6.40
4	Test adapters	For test plugs DIA 2 mm 0.079 in		Dark grey	TP2	1SNK900203R0000		20	1.70
		For test plugs DIA 4 mm 0.157 in			TP4	1SNK900205R0000		20	2.40
5	Terminal block markers	Blank marker		White	MG-CPM 13 41791	1SNB041791R0612		1680	0.27
		Blank card			MC812	1SNK160000R0000		22	10.00
					MC812PA	1SNK169999R0000		20	14.00
		Universal wire markers holder		Grey	UMH	1SNK900611R0000		10	0.20

Complete list of accessories is indicated in the terminal block datasheet including end stops.
Some accessories such as jumper bars may modify the terminal block's ratings: Complete information available in the accessories section of the catalog.

1SNK162047S0201

Technical data valid for copper conductors only.

ZK10-PE-3P PI-Spring terminal blocks

Ground with 3 connections - 10 mm 0.394 in spacing

10 mm²
6 AWG

ZK10-PE-3P

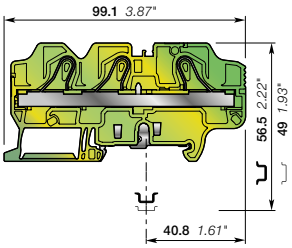

10 mm 0.394 in spacing

Description

Improve the safety of your installation in the event of a short-circuit thanks to our screwless rail contact:

- Rail contact non operator dependent,
- Performances above the requirements of the IEC 60947-7-2 standard,
- Secured snap on or off the rail,
- Profile aligned with ZK10-3P.

Ordering details

Description		Color	Type	Part Number		Pkg qty	Weight (1 pce) g
Ground	3 connections	Green-yellow	ZK10-PE-3P	1SNK710151R0000		20	43.3

Main technical data

Connecting capacity		IEC	UL - CSA
1 conductor per clamp	Rigid - Solid / Stranded	0.5 ... 16 mm²	20 ... 6 AWG
	Flexible	0.5 ... 10 mm²	
	with non insulated ferrule	0.5 ... 10 mm²	20 ... 8 AWG
	with insulated ferrule	0.5 ... 10 mm²	20 ... 8 AWG
Rated cross section		10 mm²	6 AWG
Rated short-time withstand current (1s)		1200 A	1596 A
Protection		IP20	NEMA 1
Explosive atmosphere classification		IM2 II 2 GD Ex eb I/II/IIIC	

Mounting instructions

Rail	TH 35-7.5, TH 35-15
Wire stripping length	15 mm 0.591 in
Tool (for flexible conductor without ferrule)	Flat screwdriver Ø 4 mm Ø 0.157 in

The connecting capacity data for one Rigid - Solid / Stranded - Flexible conductor (when applicable) is a mandatory information required by IEC, UL and CSA standards (Copper conductors). All other data are provided as supplementary information only. For more details, please consult our CB, UL or CSA certificates and technical datasheet available on http://www.TE.com

CE, CB, RoHS, USR CNR, CSA, EAC Ex, ATEX, IECEx, BV

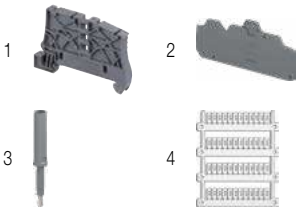

Accessories

	Description			Color	Type	Part Number		Pkg qty	Weight (1 pce) g
1	End stops	5.2 mm	0.205 in	Dark grey	BAZ1	1SNK900002R0000		50	5.30
2	End sections	2 mm	0.079 in	Dark grey	EK10-3P	1SNK710911R0000		20	4.5
3	Test adapters	For test plugs DIA 2 mm 0.079 in		Dark grey	TP2	1SNK900203R0000		20	1.70
		For test plugs DIA 4 mm 0.157 in			TP4	1SNK900205R0000		20	2.40
4	Terminal block markers	Blank marker		White	MG-CPM 13 41791	1SNB041791R0612		1680	0.27
		Blank card			MC812	1SNK160000R0000		22	10.00
					MC812PA	1SNK169999R0000		20	14.00
		Universal wire markers holder		Grey	UMH	1SNK900611R0000		10	0.20

Complete list of accessories is indicated in the terminal block datasheet including end stops.
Some accessories such as jumper bars may modify the terminal block's ratings: Complete information available in the accessories section of the catalog.

1SNK162062S0201

Technical data valid for copper conductors only.

ZK16-PE PI-Spring terminal blocks
Ground - 12 mm 0.472 in spacing

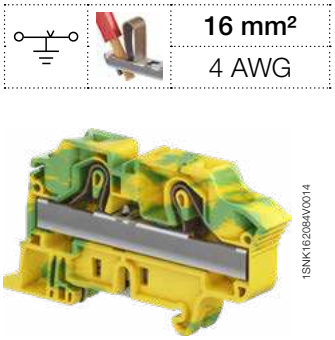

ZK16-PE

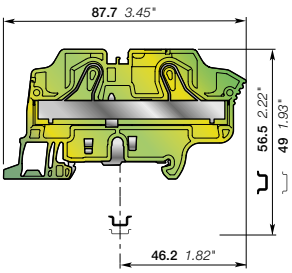

12 mm 0.472 in spacing

	16 mm²
	4 AWG

Description

Improve the safety of your installation in the event of a short-circuit thanks to our screwless rail contact:
- Rail contact non operator dependent,
- Performances above the requirements of the IEC 60947-7-2 terminal block standard,
- Secured snap on or off the rail,
- Profile aligned with ZK16.

Ordering details

Description		Color	Type	Part Number		Pkg qty	Weight (1 pce) g
Ground	2 connections	Green-yellow	ZK16-PE	1SNK712150R0000		20	47.00

Main technical data

Connecting capacity		IEC	UL - CSA
1 conductor per clamp	Rigid - Solid / Stranded	0.5 ... 25 mm²	20 ... 4 AWG
	Flexible	0.5 ... 16 mm²	
	with non insulated ferrule	0.5 ... 16 mm²	20 ... 6 AWG
	with insulated ferrule	0.5 ... 16 mm²	20 ... 6 AWG
Rated cross section		16 mm²	4 AWG
Rated short-time withstand current (1s)		1920 A	2544 A
Protection		IP20	NEMA 1
Explosive atmosphere classification		IM2 II 2 GD Ex eb I/IIC/IIIC – Class I, Zone 1, AEx e II, Ex e II U	

The connecting capacity data for one Rigid - Solid / Stranded - Flexible conductor (when applicable) is a mandatory information required by IEC, UL and CSA standards (Copper conductors). All other data are provided as supplementary information only. For more details, please consult our CB, UL or CSA certificates and technical datasheet available on http://www.TE.com

CE, CB, RoHS, USR CNR, CSA, EAC Ex, ATEX, IECEx, Haz Loc, BV, DNV

Mounting instructions

Rail		TH 35-7.5, TH 35-15
Wire stripping length		15 mm 0.591 in
Tool (for flexible conductor without ferrule)		Flat screwdriver Ø 4 mm Ø 0.157 in

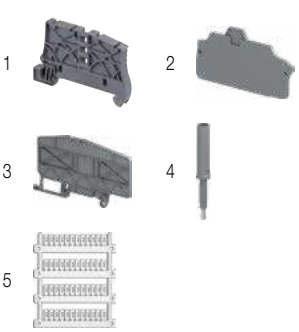

Accessories

	Description			Color	Type	Part Number		Pkg qty	Weight (1 pce) g
1	**End stops**	5.2 mm	0.205 in	Dark grey	BAZ1	1SNK900002R0000		50	5.30
2	**End sections**	2 mm	0.079 in	Dark grey	EK10	1SNK710910R0000		20	3.30
3	**Circuit separators**	3 mm	0.118 in	Dark grey	CS-R3	1SNK900107R0000		20	6.40
4	**Test adapters**	For test plugs DIA 2 mm 0.079 in		Dark grey	TP2	1SNK900203R0000		20	1.70
		For test plugs DIA 4 mm 0.157 in			TP4	1SNK900205R0000		20	2.40
5	**Terminal block markers**	Blank marker		White	MG-CPM 13 41791	1SNB041791R0612		1680	0.27
		Blank card			MC812	1SNK160000R0000		22	10.00
					MC812PA	1SNK169999R0000		20	14.00
		Universal wire markers holder		Grey	UMH	1SNK900611R0000		10	0.20

Complete list of accessories is indicated in the terminal block datasheet including end stops.
Some accessories such as jumper bars may modify the terminal block's ratings: Complete information available in the accessories section of the catalog.

1SNK162048S0201

Technical data valid for copper conductors only.

ZK16-PE-3P PI-Spring terminal blocks

Ground with 3 connections - 12 mm 0.472 in spacing

16 mm²

4 AWG

ZK16-PE-3P

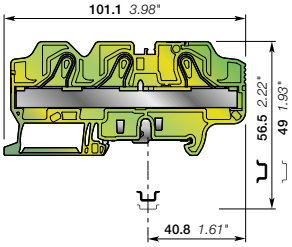

12 mm 0.472 in spacing

Description

Improve the safety of your installation in the event of a short-circuit thanks to our screwless rail contact:

- Rail contact non operator dependent,
- Performances above the requirements of the IEC 60947-7-2 standard,
- Secured snap on or off the rail,
- Profile aligned with ZK16-3P.

Ordering details

Description		Color	Type	Part Number		Pkg qty	Weight (1 pce) g
Ground	3 connections	Green-yellow	ZK16-PE-3P	1SNK712151R0000		20	56.65

Main technical data

Connecting capacity		IEC	UL - CSA
1 conductor per clamp	Rigid - Solid / Stranded	0.5 ... 25 mm²	20 ... 4 AWG
	Flexible	0.5 ... 16 mm²	
	with non insulated ferrule	0.5 ... 16 mm²	20 ... 6 AWG
	with insulated ferrule	0.5 ... 16 mm²	20 ... 6 AWG
Rated cross section		16 mm²	4 AWG
Rated short-time withstand current (1s)		1920 A	2544 A
Protection		IP20	NEMA 1
Explosive atmosphere classification		IM2 II 2 GD Ex eb I/II/IIIC	

Mounting instructions

Rail		TH 35-7.5, TH 35-15
Wire stripping length		15 mm 0.591 in
Tool (for flexible conductor without ferrule)		Flat screwdriver Ø 4 mm Ø 0.157 in

The connecting capacity data for one Rigid - Solid / Stranded - Flexible conductor (when applicable) is a mandatory information required by IEC, UL and CSA standards (Copper conductors). All other data are provided as supplementary information only. For more details, please consult our CB, UL or CSA certificates and technical datasheet available on http://www.TE.com

CE, CB, RoHS, USR CNR, CSA, EAC Ex, ATEX, IECEx, BV

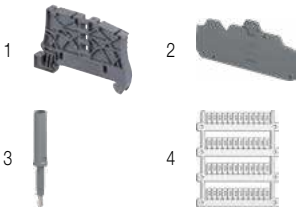

Accessories

	Description			Color	Type	Part Number		Pkg qty	Weight (1 pce) g
1	**End stops**	5.2 mm	0.205 in	Dark grey	BAZ1	1SNK900002R0000		50	5.30
2	**End sections**	2 mm	0.079 in	Dark grey	EK10-3P	1SNK710911R0000		20	4.5
3	**Test adapters**	For test plugs DIA 2 mm 0.079 in		Dark grey	TP2	1SNK900203R0000		20	1.70
		For test plugs DIA 4 mm 0.157 in			TP4	1SNK900205R0000		20	2.40
4	**Terminal block markers**	Blank marker		White	MG-CPM 13 41791	1SNB041791R0612		1680	0.27
		Blank card			MC812	1SNK160000R0000		22	10.00
					MC812PA	1SNK169999R0000		20	14.00
		Universal wire markers holder		Grey	UMH	1SNK900611R0000		10	0.20

Complete list of accessories is indicated in the terminal block datasheet including end stops.
Some accessories such as jumper bars may modify the terminal block's ratings: Complete information available in the accessories section of the catalog.

1SNK162064S0201

Technical data valid for copper conductors only.

ZK2.5-S PI-Spring terminal blocks

Disconnect with blade - with test sockets - 5.2 mm 0.205 in spacing

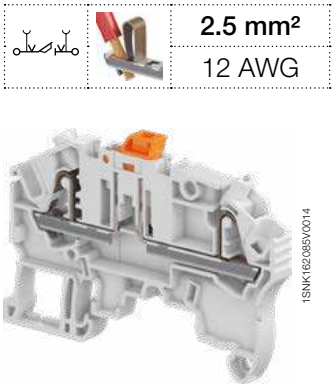

2.5 mm²
12 AWG

ZK2.5-S

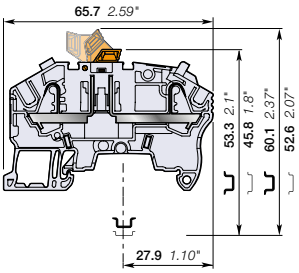

5.2 mm 0.205 in spacing

Description

Combine high performance with compact dimensions: 630 V IEC 300 V UL.
Secure the current measurement:
- for currents below 50 mA, thanks to 2 built in test points DIA 2 mm 0.079 in,
- for currents up to 16 A, by using the TP4 test adapter inserted into the jumper channels.

Ordering details

Description		Color	Type	Part Number		Pkg qty	Weight (1 pce) g
Disconnect	with 2 test sockets DIA 2 mm 0.079 in	Grey	ZK2.5-S	1SNK705310R0000		50	8.10
		Blue	ZK2.5-S-BL	1SNK705320R0000		50	8.10
		Orange	ZK2.5-S-OR	1SNK705330R0000		50	8.10

Main technical data

Connecting capacity		IEC	UL - CSA
1 conductor per clamp	Rigid - Solid / Stranded	0.2 ... 4 mm²	26 ... 12 AWG
	Flexible	0.22 ... 2.5 mm²	
	with non insulated ferrule	0.22 ... 2.5 mm²	26 ... 14 AWG
	with insulated ferrule	0.22 ... 2.5 mm²	26 ... 14 AWG
2 conductors per clamp	with twin ferrule	0.22 ... 0.5 mm²	26 ... 20 AWG
Rated current / Rated cross section		20 A / 2.5 mm²	20 A / 12 AWG
Rated short-time withstand current (1s)		300 A	396 A
Rated voltage		630 V	300 V
Impulse withstand voltage		6000 V	
Protection		IP20	NEMA 1

Mounting instructions

Rail		TH 35-7.5, TH 35-15
Wire stripping length		11 mm 0.433 in
Tool (for flexible conductor without ferrule)		Flat screwdriver Ø 3.5 mm Ø 0.138 in

Recommendation for best usage: in horizontal assemblies, disconnect terminal blocks should be mounted with fixed foot on top (power side) so that the disconnect knife does not partially close through gravity. Furthermore, as specified per IEC 60947-7-1, disconnect terminal blocks are intended to be used for temporary disconnection at zero potential and at no load.

The connecting capacity data for one Rigid - Solid / Stranded - Flexible conductor (when applicable) is a mandatory information required by IEC, UL and CSA standards (Copper conductors). All other data are provided as supplementary information only. For more details, please consult our CB, UL or CSA certificates and technical datasheet available on http://www.TE.com

CE CB RoHS USR CNR CSA EAC BV DNV

Accessories

	Description			Color	Type	Part Number		Pkg qty	Weight (1 pce) g
1	**End stops**	5.2 mm	0.205 in	Dark grey	BAZ1	1SNK900002R0000		50	5.30
2	**End sections**	2 mm	0.079 in	Dark grey	EK2.5-3P	1SNK705911R0000		20	2.40
3	**Jumper bars**	2 poles	32 A (IEC)	Orange	JB5-2	1SNK905302R0000		50	1.30
		3 poles	32 A (IEC)		JB5-3	1SNK905303R0000		50	2.00
		4 poles	32 A (IEC)		JB5-4	1SNK905304R0000		50	2.70
		5 poles	32 A (IEC)		JB5-5	1SNK905305R0000		50	3.50
		10 poles	32 A (IEC)		JB5-10	1SNK905310R0000		30	7.10
		50 poles	32 A (IEC)		JB5-50	1SNK905350R0000		10	36.00
4	**Circuit separators**	3 mm	0.118 in	Dark grey	CS-R3	1SNK900107R0000		20	6.40
5	**Test adapters**	For test plugs DIA 2 mm 0.079 in		Dark grey	TP2	1SNK900203R0000		20	1.70
		For test plugs DIA 4 mm 0.157 in			TP4	1SNK900205R0000		20	2.40
6	**Test connectors**	5.2 mm 0.205 in spacing		Dark grey	TC5	1SNK900200R0000		10	5.20
		End module, 5.2 mm 0.205 in			TC5-R1	1SNK900201R0000		10	5.20
7	**Shield connectors**				SHBP	1SNK900601R0000		20	4.10
8	**Terminal block markers**	Blank marker		White	MG-CPM 13 41790	1SNB041790R0512		1960	0.23
		Blank card			MC512	1SNK140000R0000		22	9.00
					MC512PA	1SNK149999R0000		20	10.00
		Universal wire markers holder		Grey	UMH	1SNK900611R0000		10	0.20

Complete list of accessories is indicated in the terminal block datasheet including end stops.
Some accessories such as jumper bars may modify the terminal block's ratings: Complete information available in the accessories section of the catalog.

1SNK162036S0201

Technical data valid for copper conductors only.

ZK2.5-S-4P PI-Spring terminal blocks

Disconnect with blade - with test socket - 5.2 mm 0.205 in spacing

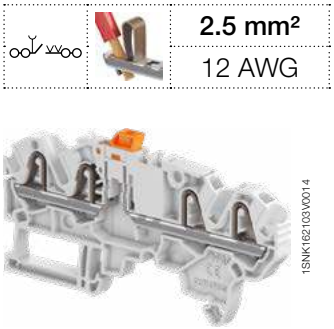

ZK2.5-S-4P

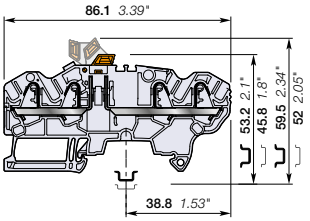

5.2 mm 0.205 in spacing

2.5 mm²
12 AWG

Description

- Combine high performances with compact dimensions: 630 V IEC 300 V UL,
- Simplify the measurement with 1 built in test point DIA 2 mm 0.079 in (for current below 50mA) and TP... test adapter inserted into one jumper channel,
- Clear marking visibility with SNK top marking location 20% enlarged.

Ordering details

Description		Color	Type	Part Number		Pkg qty	Weight (1 pce) g
Disconnect	with 1 test socket DIA 2 mm 0.079 in	Grey	ZK2.5-S-4P	1SNK705312R0000		50	11.14
		Blue	ZK2.5-S-4P-BL	1SNK705321R0000		50	11.14
		Orange	ZK2.5-S-4P-OR	1SNK705331R0000		50	11.14

Main technical data

Connecting capacity		IEC	UL - CSA
1 conductor per clamp	Rigid - Solid / Stranded	0.2 ... 4 mm²	26 ... 12 AWG
	Flexible	0.22 ... 2.5 mm²	
	with non insulated ferrule	0.22 ... 2.5 mm²	26 ... 14 AWG
	with insulated ferrule	0.22 ... 2.5 mm²	26 ... 14 AWG
2 conductors per clamp	Flexible with twin ferrule	0.22 ... 0.5 mm²	26 ... 20 AWG
Rated current / Rated cross section		20 A / 2.5 mm²	20 A / 12 AWG
Rated short-time withstand current (1s)		300 A	
Short Circuit Current Rating (with specific conditions)			
Rated voltage		630 V	300 V
Impulse withstand voltage		6000 V	
Protection		IP20	NEMA 1

Mounting instructions

Rail		TH 35-7.5, TH 35-15
Wire stripping length		11 mm 0.433 in
Tool (for flexible conductor without ferrule)		Flat screwdriver Ø 3.5 mm Ø 0.138 in

Recommendation for best usage: in horizontal assemblies, disconnect terminal blocks should be mounted with fixed foot on top (power side) so that the disconnect knife does not partially close through gravity. Furthermore, as specified per IEC 60947-7-1, disconnect terminal blocks are intended to be used for temporary disconnection at zero potential and at no load.

The connecting capacity data for one Rigid - Solid / Stranded - Flexible conductor (when applicable) is a mandatory information required by IEC, UL and CSA standards (Copper conductors). All other data are provided as supplementary information only. For more details, please consult our CB, UL or CSA certificates and technical datasheet available on http://www.TE.com

CE CB RoHS USR CNR CSA EAC BV

Accessories

	Description			Color	Type	Part Number		Pkg qty	Weight (1 pce) g
1	**End stops**	5.2 mm	0.205 in	Dark grey	BAZ1	1SNK900002R0000		50	5.30
2	**End sections**	2 mm	0.158 in	Dark grey	EK2.5-S-4P	1SNK705913R0000		20	2.94
3	**Jumper bars**	2 poles	32 A (IEC)	Orange	JB5-2	1SNK905302R0000		50	1.30
		3 poles	32 A (IEC)		JB5-3	1SNK905303R0000		50	2.00
		4 poles	32 A (IEC)		JB5-4	1SNK905304R0000		50	2.70
		5 poles	32 A (IEC)		JB5-5	1SNK905305R0000		50	3.50
		10 poles	32 A (IEC)		JB5-10	1SNK905310R0000		30	7.10
		50 poles	32 A (IEC)		JB5-50	1SNK905350R0000		10	36.00
4	**Circuit separators**	3 mm	0.118 in	Dark grey	CS-R3	1SNK900107R0000		20	6.40
5	**Test adapters**	For test plugs DIA 2 mm 0.079 in		Dark grey	TP2	1SNK900203R0000		20	1.70
		For test plugs DIA 4 mm 0.157 in			TP4	1SNK900205R0000		20	2.40
6	**Test connectors**	5.2 mm 0.205 in spacing		Dark grey	TC5	1SNK900200R0000		10	5.20
		End module, 5.2 mm 0.205 in			TC5-R1	1SNK900201R0000		10	5.20
7	**Terminal block markers**	Blank marker		White	MG-CPM 13 41790	1SNB041790R0512		1960	0.23
		Blank card			MC512	1SNK140000R0000		22	9.00
					MC512PA	1SNK149999R0000		20	10.00
		Universal wire markers holder		Grey	UMH	1SNK900611R0000		10	0.20

Complete list of accessories is indicated in the terminal block datasheet including end stops.
Some accessories such as jumper bars may modify the terminal block's ratings: Complete information available in the accessories section of the catalog.

1SNK162069S0201

Technical data valid for copper conductors only.

ZK2.5-S-R1 PI-Spring terminal blocks

Disconnect with blade - 6 mm 0.236 in spacing

2.5 mm²
12 AWG

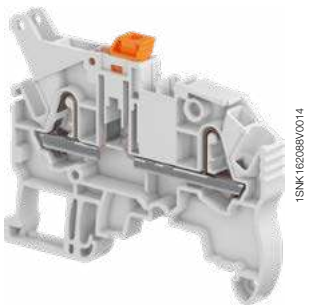

ZK2.5-S-R1

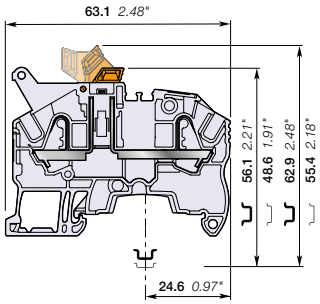

6 mm 0.236 in spacing

Description

Simplify the distribution of circuits in marshalling cabinets thanks to our disconnect terminal blocks with the same profile as ZK2.5-SF fuse.

Ordering details

Description		Color	Type	Part Number		Pkg qty	Weight (1 pce) g
Disconnect	Profile aligned with ZK2.5-SF	Grey	ZK2.5-S-R1	1SNK706310R0000		50	8.90

Main technical data

Connecting capacity		IEC	UL - CSA
1 conductor per clamp	Rigid - Solid / Stranded	0.2 ... 4 mm²	26 ... 12 AWG
	Flexible	0.22 ... 2.5 mm²	
	with non insulated ferrule	0.22 ... 2.5 mm²	26 ... 14 AWG
	with insulated ferrule	0.22 ... 2.5 mm²	26 ... 14 AWG
2 conductors per clamp	with twin ferrule	0.22 ... 0.5 mm²	26 ... 20 AWG
Rated current / Rated cross section		20 A / 2.5 mm²	20 A / 12 AWG
Rated short-time withstand current (1s)		300 A	396 A
Rated voltage		630 V	300 V
Impulse withstand voltage		6000 V	
Protection		IP20	NEMA 1

Mounting instructions

Rail		TH 35-7.5, TH 35-15
Wire stripping length		11 mm 0.433 in
Tool (for flexible conductor without ferrule)		Flat screwdriver Ø 3.5 mm Ø 0.138 in

Recommendation for best usage: in horizontal assemblies, disconnect terminal blocks should be mounted with fixed foot on top (power side) so that the disconnect knife does not partially close through gravity. Furthermore, as specified per IEC 60947-7-1, disconnect terminal blocks are intended to be used for temporary disconnection at zero potential and at no load.

The connecting capacity data for one Rigid - Solid / Stranded - Flexible conductor (when applicable) is a mandatory information required by IEC, UL and CSA standards (Copper conductors). All other data are provided as supplementary information only. For more details, please consult our CB, UL or CSA certificates and technical datasheet available on http://www.TE.com

CE CB RoHS USR CNR CSA EAC BV DNV

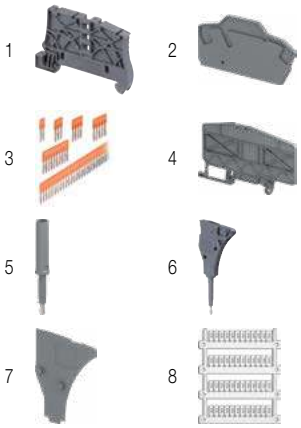

Accessories

	Description			Color	Type	Part Number		Pkg qty	Weight (1 pce) g
1	**End stops**	5.2 mm	0.205 in	Dark grey	BAZ1	1SNK900002R0000		50	5.30
2	**End sections**	2 mm	0.079 in	Dark grey	EK2.5-3P	1SNK705911R0000		20	2.40
3	**Jumper bars**	2 poles	41 A (IEC)	Orange	JB6-2	1SNK906302R0000		50	1.30
		3 poles	41 A (IEC)		JB6-3	1SNK906303R0000		50	2.10
		4 poles	41 A (IEC)		JB6-4	1SNK906304R0000		50	2.90
		5 poles	41 A (IEC)		JB6-5	1SNK906305R0000		50	3.60
		10 poles	41 A (IEC)		JB6-10	1SNK906310R0000		20	7.40
		50 poles	41 A (IEC)		JB6-50	1SNK906350R0000		10	38.10
4	**Circuit separators**	3 mm	0.118 in	Dark grey	CS-R3	1SNK900107R0000		20	6.40
5	**Test adapters**	For test plugs DIA 2 mm 0.079 in		Dark grey	TP2	1SNK900203R0000		20	1.70
		For test plugs DIA 4 mm 0.157 in			TP4	1SNK900205R0000		20	2.40
6	**Test connectors**	End module, 5.2 mm 0.205 in		Dark grey	TC5-R1	1SNK900201R0000		10	5.20
7	**Spacers**	0.8 mm	0.031 in	Dark grey	ES-TC6	1SNK900105R0000		10	0.80
8	**Terminal block markers**	Blank marker		White	MG-CPM 13 41791	1SNB041791R0612		1680	0.27
		Blank card			MC612	1SNK150000R0000		22	10.00
					MC612PA	1SNK159999R0000		20	11.00
		Universal wire markers holder		Grey	UMH	1SNK900611R0000		10	0.20

Complete list of accessories is indicated in the terminal block datasheet including end stops.
Some accessories such as jumper bars may modify the terminal block's ratings: Complete information available in the accessories section of the catalog.

ZK4-3P ZK2.5-SF

PI-Spring terminal blocks

Description	Color	Type	Part Number		Pkg qty	Weight (1 pce) g
Feed-through	Grey	ZK4-3P	1SNK706011R0000		50	11.00
Fuse	Grey, dark grey	ZK2.5-SF	1SNK706410R0000		50	16.20

Technical data valid for copper conductors only.

1SNK162037S0201

ZK2.5-SP PI-Spring terminal blocks

Disconnect with plug - with test sockets - 5.2 mm 0.205 in spacing

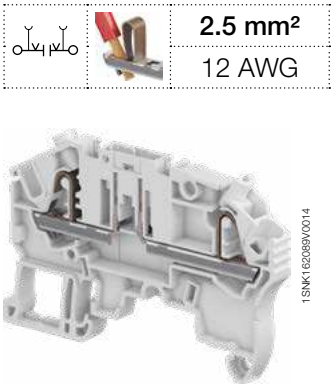

2.5 mm²
12 AWG

ZK2.5-SP

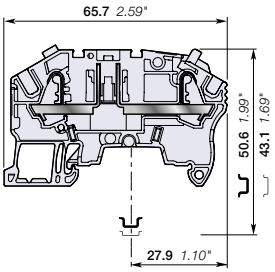

5.2 mm 0.205 in spacing

Description

The flexible solution for fitting the component of your choice in series with our quick-fitting PG5 component holder plug:

– compatible with components of 8.8 x 3.2 mm 0.346 x 0.125 in, such as resistors, diodes or mini axial fuses.

Ordering details

Description		Color	Type	Part Number		Pkg qty	Weight (1 pce) g
Disconnect	with 2 test sockets DIA 2 mm 0.079 in	Grey	ZK2.5-SP	1SNK705311R0000		50	11.50

Main technical data

Connecting capacity		IEC	UL - CSA
1 conductor per clamp	Rigid - Solid / Stranded	0.2 ... 4 mm²	26 ... 12 AWG
	Flexible	0.22 ... 2.5 mm²	
	with non insulated ferrule	0.22 ... 2.5 mm²	26 ... 14 AWG
	with insulated ferrule	0.22 ... 2.5 mm²	26 ... 14 AWG
2 conductors per clamp	with twin ferrule	0.22 ... 0.5 mm²	26 ... 20 AWG
Rated current / Rated cross section		17 A / 2.5 mm²	18 A / 12 AWG
Rated short-time withstand current (1s)		300 A	396 A
Rated voltage		630 V	300 V
Impulse withstand voltage		6000 V	
Protection		IP20	NEMA 1

Mounting instructions

Rail		TH 35-7.5, TH 35-15
Wire stripping length		11 mm 0.433 in
Tool (for flexible conductor without ferrule)		Flat screwdriver Ø 3.5 mm Ø 0.138 in

The connecting capacity data for one Rigid - Solid / Stranded - Flexible conductor (when applicable) is a mandatory information required by IEC, UL and CSA standards (Copper conductors). All other data are provided as supplementary information only. For more details, please consult our CB, UL or CSA certificates and technical datasheet available on http://www.TE.com

CE, CB, RoHS, USR CNR, CSA, EAC, BV, DNV

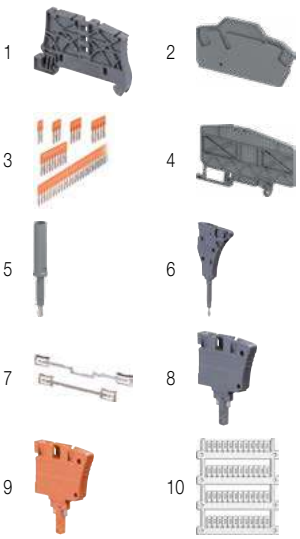

Accessories

	Description			Color	Type	Part Number		Pkg qty	Weight (1 pce) g
1	**End stops**	5.2 mm	0.205 in	Dark grey	BAZ1	1SNK900002R0000		50	5.30
2	**End sections**	2 mm	0.079 in	Dark grey	EK2.5-3P	1SNK705911R0000		20	2.40
3	**Jumper bars**	2 poles	32 A (IEC)	Orange	JB5-2	1SNK905302R0000		50	1.30
		3 poles	32 A (IEC)		JB5-3	1SNK905303R0000		50	2.00
		4 poles	32 A (IEC)		JB5-4	1SNK905304R0000		50	2.70
		5 poles	32 A (IEC)		JB5-5	1SNK905305R0000		50	3.50
		10 poles	32 A (IEC)		JB5-10	1SNK905310R0000		30	7.10
		50 poles	32 A (IEC)		JB5-50	1SNK905350R0000		10	36.00
4	**Circuit separators**	3 mm	0.118 in	Dark grey	CS-R3	1SNK900107R0000		20	6.40
5	**Test adapters**	For test plugs DIA 2 mm 0.079 in		Dark grey	TP2	1SNK900203R0000		20	1.70
		For test plugs DIA 4 mm 0.157 in			TP4	1SNK900205R0000		20	2.40
6	**Test connectors**	5.2 mm 0.205 in spacing		Dark grey	TC5	1SNK900200R0000		10	5.20
		End module, 5.2 mm 0.205 in			TC5-R1	1SNK900201R0000		10	5.20
7	**Shield connectors**				SHBP	1SNK900601R0000		20	4.10
8	**Component plugs**	Components in series with circuit		Dark grey	PG5	1SNK900401R0000		20	3.50
9	**Disconnect plugs**	Equipped with linking bar		Orange	PG5-R1	1SNK900402R0000		20	3.50
10	**Terminal block markers**	Blank marker		White	MG-CPM 13 41790	1SNB041790R0512		1960	0.23
		Blank card			MC512	1SNK140000R0000		22	9.00
					MC512PA	1SNK149999R0000		20	10.00
		Universal wire markers holder		Grey	UMH	1SNK900611R0000		10	0.20

Complete list of accessories is indicated in the terminal block datasheet including end stops.
Some accessories such as jumper bars may modify the terminal block's ratings: Complete information available in the accessories section of the catalog.

1SNK162038S0201

Technical data valid for copper conductors only.

ZK2.5-SP-4P PI-Spring terminal blocks

Disconnect with plug - with test socket - 5.2 mm 0.205 in spacing

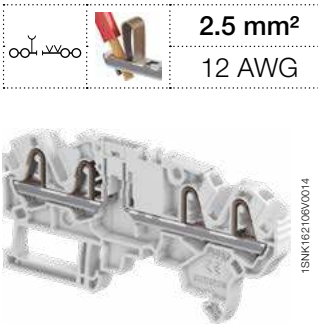

ZK2.5-SP-4P

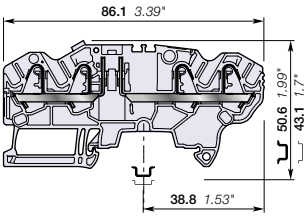

5.2 mm 0.205 in spacing

	2.5 mm²
	12 AWG

Description

The flexible solution for fitting the component of your choice in series with our quick-fitting PG5 component holder plug:

– compatible with components of 8.8 x 3.2 mm 0.346 x 0.125 in, such as resistors, diodes or mini axial fuses.

Ordering details

Description		Color	Type	Part Number		Pkg qty	Weight (1 pce) g
Disconnect	with 1 test socket DIA 2 mm 0.079 in	Grey	ZK2.5-SP-4P	1SNK705313R0000		50	10.67

Main technical data

Connecting capacity		IEC	UL - CSA
1 conductor per clamp	Rigid - Solid / Stranded	0.2 ... 4 mm²	26 ... 12 AWG
	Flexible	0.22 ... 2.5 mm²	
	with non insulated ferrule	0.22 ... 2.5 mm²	26 ... 14 AWG
	with insulated ferrule	0.22 ... 2.5 mm²	26 ... 14 AWG
2 conductors per clamp	Flexible with twin ferrule	0.22 ... 0.5 mm²	26 ... 20 AWG
Rated current / Rated cross section		17 A / 2.5 mm²	18 A / 12 AWG
Rated short-time withstand current (1s)		300 A	
Short Circuit Current Rating (with specific conditions)			
Rated voltage		630 V	300 V
Impulse withstand voltage		6000 V	
Protection		IP20	NEMA 1

Mounting instructions

Rail		TH 35-7.5, TH 35-15
Wire stripping length		11 mm 0.433 in
Tool (for flexible conductor without ferrule)		Flat screwdriver Ø 3.5 mm Ø 0.138 in

The connecting capacity data for one Rigid - Solid / Stranded - Flexible conductor (when applicable) is a mandatory information required by IEC, UL and CSA standards (Copper conductors). All other data are provided as supplementary information only. For more details, please consult our CB, UL or CSA certificates and technical datasheet available on http://www.TE.com

CE CB RoHS USR CNR CSA EAC BV

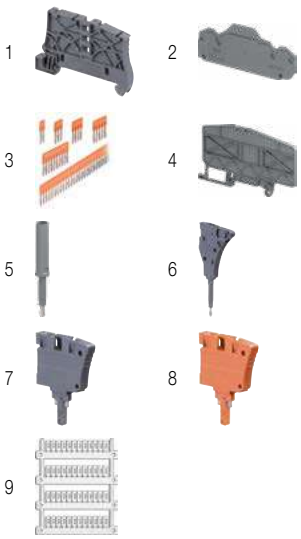

Accessories

	Description			Color	Type	Part Number		Pkg qty	Weight (1 pce) g
1	**End stops**	5.2 mm	0.205 in	Dark grey	BAZ1	1SNK900002R0000		50	5.30
2	**End sections**	2 mm	0.158 in	Dark grey	EK2.5-S-4P	1SNK705913R0000		20	2.94
3	**Jumper bars**	2 poles	32 A (IEC)	Orange	JB5-2	1SNK905302R0000		50	1.30
		3 poles	32 A (IEC)		JB5-3	1SNK905303R0000		50	2.00
		4 poles	32 A (IEC)		JB5-4	1SNK905304R0000		50	2.70
		5 poles	32 A (IEC)		JB5-5	1SNK905305R0000		50	3.50
		10 poles	32 A (IEC)		JB5-10	1SNK905310R0000		30	7.10
		50 poles	32 A (IEC)		JB5-50	1SNK905350R0000		10	36.00
4	**Circuit separators**	3 mm	0.118 in	Dark grey	CS-R3	1SNK900107R0000		20	6.40
5	**Test adapters**	For test plugs DIA 2 mm 0.079 in		Dark grey	TP2	1SNK900203R0000		20	1.70
		For test plugs DIA 4 mm 0.157 in			TP4	1SNK900205R0000		20	2.40
6	**Test connectors**	5.2 mm 0.205 in spacing		Dark grey	TC5	1SNK900200R0000		10	5.20
		End module, 5.2 mm 0.205 in			TC5-R1	1SNK900201R0000		10	5.20
7	**Component plugs**	Components in series with circuit		Dark grey	PG5	1SNK900401R0000		20	3.50
8	**Disconnect plugs**	Equipped with linking bar		Orange	PG5-R1	1SNK900402R0000		20	3.50
9	**Terminal block markers**	Blank marker		White	MG-CPM 13 41790	1SNB041790R0512		1960	0.23
		Blank card			MC512	1SNK140000R0000		22	9.00
					MC512PA	1SNK149999R0000		20	10.00
		Universal wire markers holder		Grey	UMH	1SNK900611R0000		10	0.20

Complete list of accessories is indicated in the terminal block datasheet including end stops.
Some accessories such as jumper bars may modify the terminal block's ratings: Complete information available in the accessories section of the catalog.

1SNK162070S0201

Technical data valid for copper conductors only.

ZK2.5-SF PI-Spring terminal blocks
For 5x20 fuses - 6 mm 0.236 in spacing

2.5 mm²
12 AWG

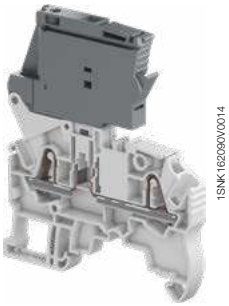

ZK2.5-SF

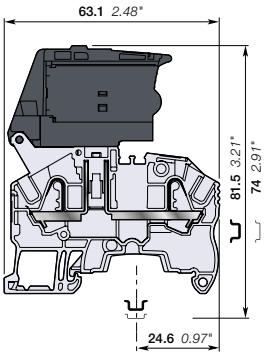

6 mm 0.236 in spacing

Description

Protect your circuits with 5x20 fuse terminal blocks compliant with IEC 60947-7-3 standard (fuse not supplied with the terminal blocks),

– Simplify the distribution thanks to the 2 jumper channels aligned with ZK4-3P feed-through and ZK2.5-S-R1 disconnect terminal blocks.

Ordering details

Description	Color	Type	Part Number		Pkg qty	Weight (1 pce) g
Fuse	Grey, dark grey	ZK2.5-SF	1SNK706410R0000		50	16.20

Main technical data

Connecting capacity		IEC	UL - CSA
1 conductor per clamp	Rigid - Solid / Stranded	0.2 ... 4 mm²	26 ... 12 AWG
	Flexible	0.22 ... 2.5 mm²	
	with non insulated ferrule	0.22 ... 2.5 mm²	26 ... 14 AWG
	with insulated ferrule	0.22 ... 2.5 mm²	26 ... 14 AWG
2 conductors per clamp	with twin ferrule	0.22 ... 0.5 mm²	26 ... 20 AWG
Rated current / Rated cross section		6.3 A / 2.5 mm²	16 A / 12 AWG
Rated short-time withstand current (1s)			396 A
Rated voltage		500 V	300 V
Impulse withstand voltage		6000 V	
Protection		IP20	NEMA 1

Mounting instructions

Rail		TH 35-7.5, TH 35-15
Wire stripping length		11 mm 0.433 in
Tool (for flexible conductor without ferrule)		Flat screwdriver Ø 3.5 mm Ø 0.138 in

The fuse holder must be first disconnected prior any fuse replacement. Mount your fuse safely without touching any active part: put the fuse into the hooks of the fuse holder shutter; at the closing of the shutter, the fuse is perfectly in place in the fuse holder.

Separate arrangement		Assembly composed of 1 fuse terminal block in between non fuse terminal blocks	Overload and short-circuit protection	2.5 W
			Exclusive short-circuit protection	4 W
Compound arrangement		Assembly composed of 5 fuse terminal blocks	Overload and short-circuit protection	1.6 W
			Exclusive short-circuit protection	4 W

The connecting capacity data for one Rigid - Solid / Stranded - Flexible conductor (when applicable) is a mandatory information required by IEC, UL and CSA standards (Copper conductors). All other data are provided as supplementary information only. For more details, please consult our CB, UL or CSA certificates and technical datasheet available on http://www.TE.com

CE | CB | RoHS | USR CNR | CSA | EAC | BV | DNV

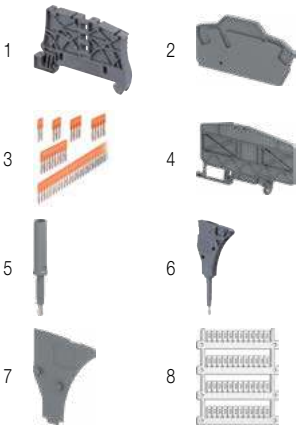

Accessories

	Description			Color	Type	Part Number		Pkg qty	Weight (1 pce) g
1	End stops	5.2 mm	0.205 in	Dark grey	BAZ1	1SNK900002R0000		50	5.30
2	End sections	2 mm	0.079 in	Dark grey	EK2.5-3P	1SNK705911R0000		20	2.40
3	Jumper bars	2 poles	41 A (IEC)	Orange	JB6-2	1SNK906302R0000		50	1.30
		3 poles	41 A (IEC)		JB6-3	1SNK906303R0000		50	2.10
		4 poles	41 A (IEC)		JB6-4	1SNK906304R0000		50	2.90
		5 poles	41 A (IEC)		JB6-5	1SNK906305R0000		50	3.60
		10 poles	41 A (IEC)		JB6-10	1SNK906310R0000		20	7.40
		50 poles	41 A (IEC)		JB6-50	1SNK906350R0000		10	38.10
4	Circuit separators	3 mm	0.118 in	Dark grey	CS-R3	1SNK900107R0000		20	6.40
5	Test adapters	For test plugs DIA 2 mm 0.079 in		Dark grey	TP2	1SNK900203R0000		20	1.70
		For test plugs DIA 4 mm 0.157 in			TP4	1SNK900205R0000		20	2.40
6	Test connectors	End module, 5.2 mm 0.205 in		Dark grey	TC5-R1	1SNK900201R0000		10	5.20
7	Spacers	0.8 mm	0.031 in	Dark grey	ES-TC6	1SNK900105R0000		10	0.80
8	Terminal block markers	Blank marker		White	MG-CPM 13 41791	1SNB041791R0612		1680	0.27
		Blank card			MC612	1SNK150000R0000		22	10.00
					MC612PA	1SNK159999R0000		20	11.00

Complete list of accessories is indicated in the terminal block datasheet including end stops.
Some accessories such as jumper bars may modify the terminal block's ratings: Complete information available in the accessories section of the catalog.

1SNK162021S0201

Technical data valid for copper conductors only.

ZK2.5-SF-R PI-Spring terminal blocks

For 5x20 fuses - with blown fuse indicator - 6 mm 0.236 in spacing

2.5 mm²	
12 AWG	

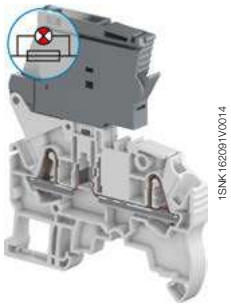

ZK2.5-SF-R

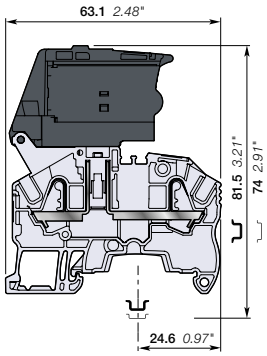

6 mm 0.236 in spacing

Description

- Protect your circuits with 5x20 fuse terminal blocks compliant with IEC 60947-7-3 standard (fuse not supplied with the terminal blocks),
- Simplify the distribution thanks to the 2 jumper channels aligned with ZK4-3P feed-through and ZK2.5-S-R1 disconnect terminal blocks,
- Quickly identify the defective circuit thanks to the blown fuse indicator (with leakage current < 0.5 mA).

Ordering details

Description		Color	Type	Part Number		Pkg qty	Weight (1 pce) g
Fuse	with blown fuse indicator 24 ... 110 V AC / DC	Grey, dark grey	ZK2.5-SF-R1	1SNK706411R0000		50	16.30
	with blown fuse indicator 115 ... 250 V AC / DC		ZK2.5-SF-R3	1SNK706412R0000		50	16.30

Main technical data

Connecting capacity		IEC	UL - CSA
1 conductor per clamp	Rigid - Solid / Stranded	0.2 ... 4 mm²	26 ... 12 AWG
	Flexible	0.22 ... 2.5 mm²	
	with non insulated ferrule	0.22 ... 2.5 mm²	26 ... 14 AWG
	with insulated ferrule	0.22 ... 2.5 mm²	26 ... 14 AWG
2 conductors per clamp	with twin ferrule	0.22 ... 0.5 mm²	26 ... 20 AWG
Rated current / Rated cross section		6.3 A / 2.5 mm²	16 A / 12 AWG
Rated short-time withstand current (1s)			396 A
Rated voltage		500 V	300 V
Impulse withstand voltage		6000 V	
Protection		IP20	NEMA 1

Mounting instructions

Rail		TH 35-7.5, TH 35-15
Wire stripping length		11 mm 0.433 in
Tool (for flexible conductor without ferrule)		Flat screwdriver Ø 3.5 mm Ø 0.138 in

The fuse holder must be first disconnected prior any fuse replacement. Mount your fuse safely without touching any active part: put the fuse into the hooks of the fuse holder shutter; at the closing of the shutter, the fuse is perfectly in place in the fuse holder.

Separate arrangement	Assembly composed of 1 fuse terminal block in between non fuse terminal blocks	Overload and short-circuit protection	2.5 W
		Exclusive short-circuit protection	4 W
Compound arrangement	Assembly composed of 5 fuse terminal blocks	Overload and short-circuit protection	1.6 W
		Exclusive short-circuit protection	4 W

The connecting capacity data for one Rigid - Solid / Stranded - Flexible conductor (when applicable) is a mandatory information required by IEC, UL and CSA standards (Copper conductors). All other data are provided as supplementary information only. For more details, please consult our CB, UL or CSA certificates and technical datasheet available on http://www.TE.com

CE CB RoHS USR CNR CSA EAC BV DNV

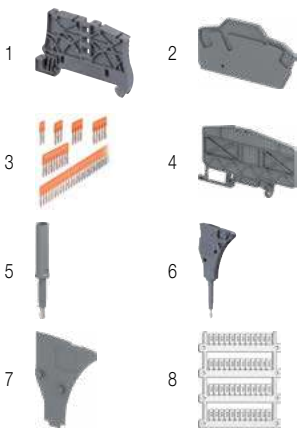

Accessories

	Description			Color	Type	Part Number		Pkg qty	Weight (1 pce) g
1	**End stops**	5.2 mm	0.205 in	Dark grey	BAZ1	1SNK900002R0000		50	5.30
2	**End sections**	2 mm	0.079 in	Dark grey	EK2.5-3P	1SNK705911R0000		20	2.40
3	**Jumper bars**	2 poles	41 A (IEC)	Orange	JB6-2	1SNK906302R0000		50	1.30
		3 poles	41 A (IEC)		JB6-3	1SNK906303R0000		50	2.10
		4 poles	41 A (IEC)		JB6-4	1SNK906304R0000		50	2.90
		5 poles	41 A (IEC)		JB6-5	1SNK906305R0000		50	3.60
		10 poles	41 A (IEC)		JB6-10	1SNK906310R0000		20	7.40
		50 poles	41 A (IEC)		JB6-50	1SNK906350R0000		10	38.10
4	**Circuit separators**	3 mm	0.118 in	Dark grey	CS-R3	1SNK900107R0000		20	6.40
5	**Test adapters**	For test plugs DIA 2 mm 0.079 in		Dark grey	TP2	1SNK900203R0000		20	1.70
		For test plugs DIA 4 mm 0.157 in			TP4	1SNK900205R0000		20	2.40
6	**Test connectors**	End module, 5.2 mm 0.205 in		Dark grey	TC5-R1	1SNK900201R0000		10	5.20
7	**Spacers**	0.8 mm	0.031 in	Dark grey	ES-TC6	1SNK900105R0000		10	0.80
8	**Terminal block markers**	Blank marker		White	MG-CPM 13 41791	1SNB041791R0612		1680	0.27
		Blank card			MC612	1SNK150000R0000		22	10.00
					MC612PA	1SNK159999R0000		20	11.00

Complete list of accessories is indicated in the terminal block datasheet including end stops.
Some accessories such as jumper bars may modify the terminal block's ratings: Complete information available in the accessories section of the catalog.

1SNK162022S0201

Technical data valid for copper conductors only.

ZK2.5-D2 PI-Spring terminal blocks

Double deck with 2 feed-through circuits - 5.2 mm 0.205 in spacing

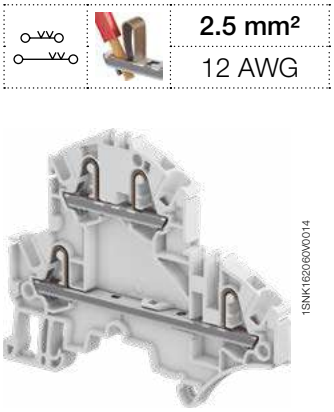

2.5 mm²	
12 AWG	

Description

Combine high performance with compact dimensions:
- 800 V IEC 600 V UL,
- 2 jumper channels and a large input and output marker zone on each deck.

1SNK162060V0014

ZK2.5-D2

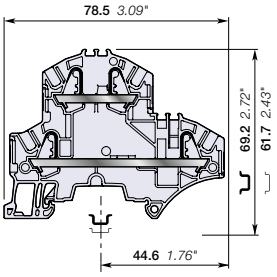

5.2 mm 0.205 in spacing

Ordering details

Description		Color	Type	Part Number		Pkg qty	Weight (1 pce) g
Feed-through	2 feed-through circuits	Grey	ZK2.5-D2	1SNK705210R0000		50	11.20
		Blue	ZK2.5-D2-BL	1SNK705220R0000		50	11.20

Main technical data

Connecting capacity		IEC	UL - CSA
1 conductor per clamp	Rigid - Solid / Stranded	0.2 ... 4 mm²	26 ... 12 AWG
	Flexible	0.22 ... 2.5 mm²	
	with non insulated ferrule	0.22 ... 2.5 mm²	26 ... 14 AWG
	with insulated ferrule	0.22 ... 2.5 mm²	26 ... 14 AWG
2 conductors per clamp	Flexible with twin ferrule	0.22 ... 0.5 mm²	26 ... 20 AWG
Rated current / Rated cross section		24 A / 2.5 mm²	20 A / 12 AWG
Rated short-time withstand current (1s)		300 A	396 A
Short Circuit Current Rating (with specific conditions)			100 kA
Rated voltage		800 V	600 V
Impulse withstand voltage		8000 V	
Protection		IP20	NEMA 1
Increased safety Ex e		693 V 21 A IEC/EN 60079-7 - IM2 II 2 GD Ex eb I/IIC/IIIC	

Mounting instructions

Rail		TH 35-7.5, TH 35-15
Wire stripping length		11 mm 0.433 in
Tool (for flexible conductor without ferrule)		Flat screwdriver Ø 3.5 mm Ø 0.138 in

The connecting capacity data for one Rigid - Solid / Stranded - Flexible conductor (when applicable) is a mandatory information required by IEC, UL and CSA standards (Copper conductors). All other data are provided as supplementary information only. For more details, please consult our CB, UL or CSA certificates and technical datasheet available on http://www.TE.com

CE | CB | RoHS | USR CNR | CSA | EAC Ex | ATEX | IECEx | Haz Loc | BV | DNV

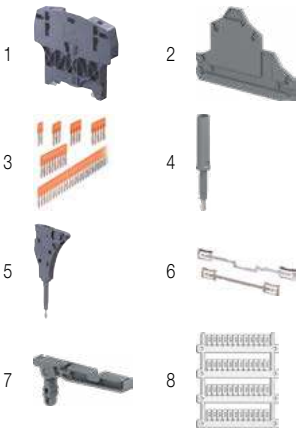

Accessories

	Description			Color	Type	Part Number		Pkg qty	Weight (1 pce) g
1	**End stops**	10 mm	0.394 in	Dark grey	BAZH1	1SNK900102R0000		20	24.00
2	**End sections**	2 mm	0.079 in	Dark grey	EK2.5-D2	1SNK705960R0000		20	3.40
3	**Jumper bars**	2 poles	32 A (IEC)	Orange	JB5-2	1SNK905302R0000		50	1.30
		3 poles	32 A (IEC)		JB5-3	1SNK905303R0000		50	2.00
		4 poles	32 A (IEC)		JB5-4	1SNK905304R0000		50	2.70
		5 poles	32 A (IEC)		JB5-5	1SNK905305R0000		50	3.50
		10 poles	32 A (IEC)		JB5-10	1SNK905310R0000		30	7.10
		50 poles	32 A (IEC)		JB5-50	1SNK905350R0000		10	36.00
4	**Test adapters**	For test plugs DIA 2 mm 0.079 in		Dark grey	TP2	1SNK900203R0000		20	1.70
		For test plugs DIA 4 mm 0.157 in			TP4	1SNK900205R0000		20	2.40
5	**Test connectors**	5.2 mm 0.205 in spacing		Dark grey	TC5	1SNK900200R0000		10	5.20
		End module, 5.2 mm 0.205 in			TC5-R1	1SNK900201R0000		10	5.20
6	**Shield connectors**				SHB	1SNK900602R0000		20	4.90
7	**Label holders**			Dark grey	LH-J	1SNK900606R0000		100	0.73
8	**Terminal block markers**	Blank marker		White	MG-CPM 13 41790	1SNB041790R0512		1960	0.23
		Blank card			MC512	1SNK140000R0000		22	9.00
					MC512PA	1SNK149999R0000		20	10.00
		Universal wire markers holder		Grey	UMH	1SNK900611R0000		10	0.20

Complete list of accessories is indicated in the terminal block datasheet including end stops.
Some accessories such as jumper bars may modify the terminal block's ratings: Complete information available in the accessories section of the catalog.

Ground PI-Spring terminal blocks

Description		Color	Type	Part Number		Pkg qty	Weight (1 pce) g
Ground	Profile aligned with ZK2.5-D2 and ZK2.5-D1	Green-yellow	ZK2.5-D1-PE	1SNK705250R0000		20	15.70

1SNK162033S0201

Technical data valid for copper conductors only.

ZK2.5-D1 PI-Spring terminal blocks

Double deck with 1 feed-through circuit - 5.2 mm 0.205 in spacing

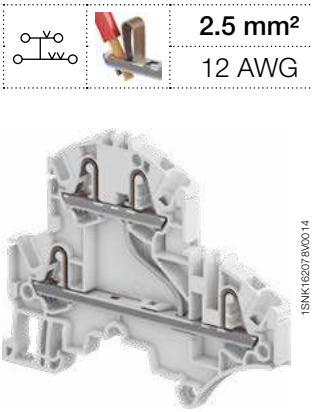

2.5 mm²
12 AWG

1SNK162078V0014

ZK2.5-D1

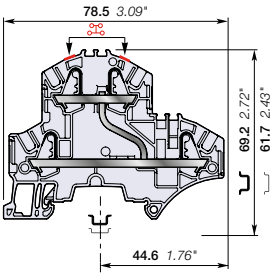

5.2 mm 0.205 in spacing

Description

– Find the same functionalities as ZK2.5-D2 and ease one potential distribution on 4 independent connections.

Ordering details

Description		Color	Type	Part Number		Pkg qty	Weight (1 pce) g
Feed-through	1 feed-through circuit	Grey	ZK2.5-D1	1SNK705211R0000		50	11.20

Main technical data

Connecting capacity		IEC	UL - CSA
1 conductor per clamp	Rigid - Solid / Stranded	0.2 ... 4 mm²	26 ... 12 AWG
	Flexible	0.22 ... 2.5 mm²	
	with non insulated ferrule	0.22 ... 2.5 mm²	26 ... 14 AWG
	with insulated ferrule	0.22 ... 2.5 mm²	26 ... 14 AWG
2 conductors per clamp	Flexible with twin ferrule	0.22 ... 0.5 mm²	26 ... 20 AWG
Rated current / Rated cross section		24 A / 2.5 mm²	20 A / 12 AWG
Rated short-time withstand current (1s)		300 A	396 A
Short Circuit Current Rating (with specific conditions)			100 kA
Rated voltage		800 V	600 V
Impulse withstand voltage		8000 V	
Protection		IP20	NEMA 1
Increased safety Ex e		693 V 21 A IEC/EN 60079-7 - IM2 II 2 GD Ex eb I/IIC/IIIC	

Mounting instructions

Rail		TH 35-7.5, TH 35-15
Wire stripping length		11 mm 0.433 in
Tool (for flexible conductor without ferrule)		Flat screwdriver Ø 3.5 mm Ø 0.138 in

The connecting capacity data for one Rigid - Solid / Stranded - Flexible conductor (when applicable) is a mandatory information required by IEC, UL and CSA standards (Copper conductors). All other data are provided as supplementary information only. For more details, please consult our CB, UL or CSA certificates and technical datasheet available on http://www.TE.com

CE | CB | RoHS | USR CNR | CSA | EAC Ex | ATEX | IECEx | Haz Loc | BV | DNV

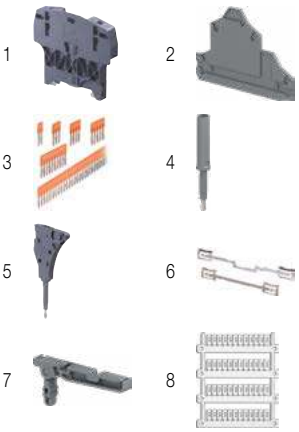

Accessories

	Description			Color	Type	Part Number		Pkg qty	Weight (1 pce) g
1	**End stops**	10 mm	0.394 in	Dark grey	BAZH1	1SNK900102R0000		20	24.00
2	**End sections**	2 mm	0.079 in	Dark grey	EK2.5-D2	1SNK705960R0000		20	3.40
3	**Jumper bars**	2 poles	32 A (IEC)	Orange	JB5-2	1SNK905302R0000		50	1.30
		3 poles	32 A (IEC)		JB5-3	1SNK905303R0000		50	2.00
		4 poles	32 A (IEC)		JB5-4	1SNK905304R0000		50	2.70
		5 poles	32 A (IEC)		JB5-5	1SNK905305R0000		50	3.50
		10 poles	32 A (IEC)		JB5-10	1SNK905310R0000		30	7.10
		50 poles	32 A (IEC)		JB5-50	1SNK905350R0000		10	36.00
4	**Test adapters**	For test plugs DIA 2 mm 0.079 in		Dark grey	TP2	1SNK900203R0000		20	1.70
		For test plugs DIA 4 mm 0.157 in			TP4	1SNK900205R0000		20	2.40
5	**Test connectors**	5.2 mm 0.205 in spacing		Dark grey	TC5	1SNK900200R0000		10	5.20
		End module, 5.2 mm 0.205 in			TC5-R1	1SNK900201R0000		10	5.20
6	**Shield connectors**				SHB	1SNK900602R0000		20	4.90
7	**Label holders**			Dark grey	LH-J	1SNK900606R0000		100	0.73
8	**Terminal block markers**	Blank marker		White	MG-CPM 13 41790	1SNB041790R0512		1960	0.23
		Blank card			MC512	1SNK140000R0000		22	9.00
					MC512PA	1SNK149999R0000		20	10.00
		Universal wire markers holder		Grey	UMH	1SNK900611R0000		10	0.20

Complete list of accessories is indicated in the terminal block datasheet including end stops.
Some accessories such as jumper bars may modify the terminal block's ratings: Complete information available in the accessories section of the catalog.

Ground PI-Spring terminal blocks

Description		Color	Type	Part Number		Pkg qty	Weight (1 pce) g
Ground	Profile aligned with ZK2.5-D2 and ZK2.5-D1	Green-yellow	ZK2.5-D1-PE	1SNK705250R0000		20	15.70

1SNK162035S0201

Technical data valid for copper conductors only.

ZK2.5-D2-PE PI-Spring terminal blocks

Double deck with 1 feed-through circuit and 1 ground circuit - 5.2 mm 0.205 in spacing

2.5 mm²
12 AWG

ZK2.5-D2-PE

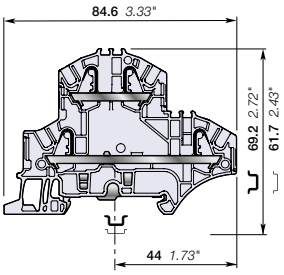

5.2 mm 0.205 in spacing

Description

Combine high performance with compact dimensions:
- 800 V IEC 600 V UL,
- 1 feed through circuit and 1 ground circuit in just 5.2 mm 0.205 in spacing,
- 2 jumper channels and a large input and output marker zone on each deck,
- designed for easy wiring.

Ordering details

Description		Color	Type	Part Number		Pkg qty	Weight (1 pce) g
Feed-through + ground	1 feed-through circuit and 1 ground circuit	Grey, Green-yellow	ZK2.5-D2-PE	1SNK705212R0000		20	15.70

Main technical data

Connecting capacity		IEC	UL - CSA
1 conductor per clamp	Rigid - Solid / Stranded	0.2 ... 4 mm²	26 ... 12 AWG
	Flexible	0.22 ... 2.5 mm²	
	with non insulated ferrule	0.22 ... 2.5 mm²	26 ... 14 AWG
	with insulated ferrule	0.22 ... 2.5 mm²	26 ... 14 AWG
2 conductors per clamp	Flexible with twin ferrule	0.22 ... 0.5 mm²	26 ... 20 AWG
Rated current / Rated cross section		24 A / 2.5 mm²	20 A / 12 AWG
Rated short-time withstand current (1s)		300 A	396 A
Short Circuit Current Rating (with specific conditions)			
Rated voltage		800 V	600 V
Impulse withstand voltage		8000 V	
Protection		IP20	NEMA 1
Increased safety Ex e		693 V 21 A IEC/EN 60079-7 - IM2 II 2 GD Ex eb I/IIC/IIIC	

Mounting instructions

Rail		TH 35-7.5, TH 35-15
Wire stripping length		11 mm 0.433 in
Tool (for flexible conductor without ferrule)		Flat screwdriver Ø 3.5 mm Ø 0.138 in

The connecting capacity data for one Rigid - Solid / Stranded - Flexible conductor (when applicable) is a mandatory information required by IEC, UL and CSA standards (Copper conductors). All other data are provided as supplementary information only. For more details, please consult our CB, UL or CSA certificates and technical datasheet available on http://www.TE.com

CE | CB | RoHS | USR CNR | CSA | EAC Ex | ATEX | IECEx | Haz Loc | BV | DNV

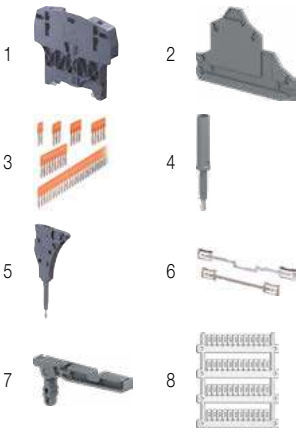

Accessories

	Description			Color	Type	Part Number		Pkg qty	Weight (1 pce) g
1	**End stops**	10 mm	0.394 in	Dark grey	BAZH1	1SNK900102R0000		20	24.00
2	**End sections**	2 mm	0.079 in	Dark grey	EK2.5-D2	1SNK705960R0000		20	3.40
3	**Jumper bars**	2 poles	32 A (IEC)	Orange	JB5-2	1SNK905302R0000		50	1.30
		3 poles	32 A (IEC)		JB5-3	1SNK905303R0000		50	2.00
		4 poles	32 A (IEC)		JB5-4	1SNK905304R0000		50	2.70
		5 poles	32 A (IEC)		JB5-5	1SNK905305R0000		50	3.50
		10 poles	32 A (IEC)		JB5-10	1SNK905310R0000		30	7.10
		50 poles	32 A (IEC)		JB5-50	1SNK905350R0000		10	36.00
4	**Test adapters**	For test plugs DIA 2 mm 0.079 in		Dark grey	TP2	1SNK900203R0000		20	1.70
		For test plugs DIA 4 mm 0.157 in			TP4	1SNK900205R0000		20	2.40
5	**Test connectors**	5.2 mm 0.205 in spacing		Dark grey	TC5	1SNK900200R0000		10	5.20
		End module, 5.2 mm 0.205 in			TC5-R1	1SNK900201R0000		10	5.20
6	**Shield connectors**				SHB	1SNK900602R0000		20	4.90
7	**Label holders**			Dark grey	LH-J	1SNK900606R0000		100	0.73
8	**Terminal block markers**	Blank marker		White	MG-CPM 13 41790	1SNB041790R0512		1960	0.23
		Blank card			MC512	1SNK140000R0000		22	9.00
					MC512PA	1SNK149999R0000		20	10.00
		Universal wire markers holder		Grey	UMH	1SNK900611R0000		10	0.20

Complete list of accessories is indicated in the terminal block datasheet including end stops.
Some accessories such as jumper bars may modify the terminal block's ratings: Complete information available in the accessories section of the catalog.

Feed-through PI-Spring terminal blocks

Description	Color	Type	Part Number		Pkg qty	Weight (1 pce) g
Feed-through	Grey	ZK2.5-D2	1SNK705210R0000		50	11.20

1SNK162034S0201

Technical data valid for copper conductors only.

ZK2.5-D1-PE PI-Spring terminal blocks

Double deck with 1 ground circuit - 5.2 mm 0.205 in spacing

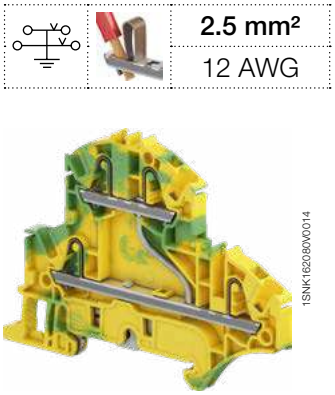

2.5 mm²	
12 AWG	

1SNK162080V0014

ZK2.5-D1-PE

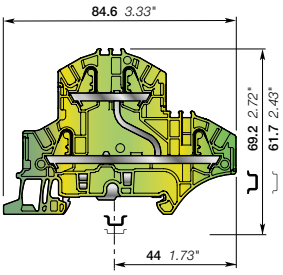

5.2 mm 0.205 in spacing

Description

Improve the safety of your installation in the event of a short-circuit thanks to our screwless rail contact:

- Rail contact non operator dependent,
- Performances above the requirements of the IEC 60947-7-2 terminal block standard,
- Secured snap on or off the rail,
- Profile aligned with ZK2.5-D2.

Ordering details

Description		Color	Type	Part Number		Pkg qty	Weight (1 pce) g
Ground	1 ground circuit	Green-yellow	ZK2.5-D1-PE	1SNK705250R0000		20	15.70

Main technical data

Connecting capacity		IEC	UL - CSA
1 conductor per clamp	Rigid - Solid / Stranded	0.2 ... 4 mm²	26 ... 12 AWG
	Flexible	0.22 ... 2.5 mm²	
	with non insulated ferrule	0.22 ... 2.5 mm²	26 ... 14 AWG
	with insulated ferrule	0.22 ... 2.5 mm²	26 ... 14 AWG
Rated cross section		2.5 mm²	12 AWG
Rated short-time withstand current (1s)		300 A	396 A
Protection		IP20	NEMA 1
Explosive atmosphere classification		IM2 II 2 GD Ex eb I/IIC/IIIC – Class I, Zone 1, AEx e II, Ex e II U	

Mounting instructions

Rail		TH 35-7.5, TH 35-15
Wire stripping length		11 mm 0.433 in
Tool (for flexible conductor without ferrule)		Flat screwdriver Ø 3.5 mm Ø 0.138 in

The connecting capacity data for one Rigid - Solid / Stranded - Flexible conductor (when applicable) is a mandatory information required by IEC, UL and CSA standards (Copper conductors). All other data are provided as supplementary information only. For more details, please consult our CB, UL or CSA certificates and technical datasheet available on http://www.TE.com

CE, CB, RoHS, USR CNR, CSA, EAC Ex, ATEX, IECEx, Haz Loc, BV, DNV

Accessories

	Description			Color	Type	Part Number		Pkg qty	Weight (1 pce) g
1	**End stops**	10 mm	0.394 in	Dark grey	BAZH1	1SNK900102R0000		20	24.00
2	**End sections**	2 mm	0.079 in	Dark grey	EK2.5-D2	1SNK705960R0000		20	3.40
3	**Test adapters**	For test plugs DIA 2 mm 0.079 in		Dark grey	TP2	1SNK900203R0000		20	1.70
		For test plugs DIA 4 mm 0.157 in			TP4	1SNK900205R0000		20	2.40
4	**Test connectors**	5.2 mm 0.205 in spacing		Dark grey	TC5	1SNK900200R0000		10	5.20
		End module, 5.2 mm 0.205 in			TC5-R1	1SNK900201R0000		10	5.20
5	**Shield connectors**				SHB	1SNK900602R0000		20	4.90
6	**Label holders**			Dark grey	LH-J	1SNK900606R0000		100	0.73
7	**Terminal block markers**	Blank marker		White	MG-CPM 13 41790	1SNB041790R0512		1960	0.23
		Blank card			MC512	1SNK140000R0000		22	9.00
					MC512PA	1SNK149999R0000		20	10.00
		Universal wire markers holder		Grey	UMH	1SNK900611R0000		10	0.20

Complete list of accessories is indicated in the terminal block datasheet including end stops.
Some accessories such as jumper bars may modify the terminal block's ratings: Complete information available in the accessories section of the catalog.

1SNK162049S0201

Technical data valid for copper conductors only.

ZK2.5-T3 PI-Spring terminal blocks

Triple deck with 3 feed-through circuits - 5.2 mm 0.205 in spacing

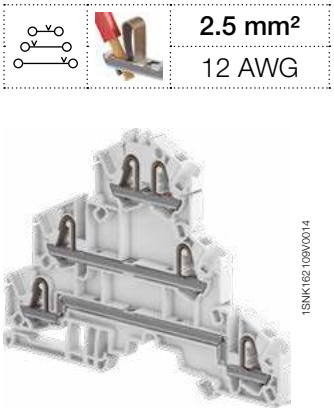

2.5 mm²
12 AWG

1SNK162109V0014

ZK2.5-T3

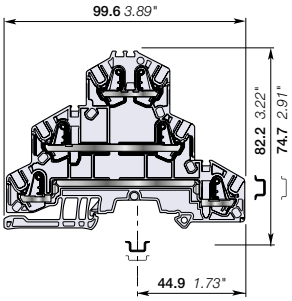

5.2 mm 0.205 in spacing

Description

Combine high performance with compact dimensions in just 5.2 mm 0.205 in spacing:
- 500 V IEC 300 V UL,
- 1 jumper channel and a large input and output marker zone on each deck.

Ordering details

Description		Color	Type	Part Number		Pkg qty	Weight (1 pce) g
Feed-through	3 feed-through circuits	Grey	ZK2.5-T3	1SNK705510R0000		25	17.33

Main technical data

Connecting capacity		IEC	UL - CSA
1 conductor per clamp	Rigid - Solid / Stranded	0.2 ... 4 mm²	26 ... 12 AWG
	Flexible	0.22 ... 2.5 mm²	
	with non insulated ferrule	0.22 ... 2.5 mm²	26 ... 14 AWG
	with insulated ferrule	0.22 ... 2.5 mm²	26 ... 14 AWG
2 conductors per clamp	Flexible with twin ferrule	0.22 ... 0.5 mm²	26 ... 20 AWG
Rated current / Rated cross section		22 A / 2.5 mm²	20 A / 12 AWG
Rated short-time withstand current (1s)		300 A	
Short Circuit Current Rating (with specific conditions)			
Rated voltage		500 V	300 V
Impulse withstand voltage		8000 V	
Protection		IP20	NEMA 1
Increased safety Ex e		440 V 20 A IEC/EN 60079-7 - IM2 II 2 GD Ex eb I/IIC/IIIC	

Mounting instructions

Rail		TH 35-7.5, TH 35-15
Wire stripping length		11 mm 0.433 in
Tool (for flexible conductor without ferrule)		Flat screwdriver Ø 3.5 mm Ø 0.138 in

The connecting capacity data for one Rigid - Solid / Stranded - Flexible conductor (when applicable) is a mandatory information required by IEC, UL and CSA standards (Copper conductors). All other data are provided as supplementary information only. For more details, please consult our CB, UL or CSA certificates and technical datasheet available on http://www.TE.com

CE, CB, RoHS, USR CNR, CSA, EAC, ATEX, IECEx, BV

Accessories

	Description			Color	Type	Part Number		Pkg qty	Weight (1 pce) g
1	**End stops**	10 mm	0.394 in	Dark grey	BAZH1	1SNK900102R0000		20	24.00
2	**End sections**	0.8 mm	0.031 in	Dark grey	EK2.5-T3	1SNK705961R0000		20	4.76
3	**Jumper bars**	2 poles	32 A (IEC)	Orange	JB5-2	1SNK905302R0000		50	1.30
		3 poles	32 A (IEC)		JB5-3	1SNK905303R0000		50	2.00
		4 poles	32 A (IEC)		JB5-4	1SNK905304R0000		50	2.70
		5 poles	32 A (IEC)		JB5-5	1SNK905305R0000		50	3.50
		10 poles	32 A (IEC)		JB5-10	1SNK905310R0000		30	7.10
		50 poles	32 A (IEC)		JB5-50	1SNK905350R0000		10	36.00
4	**Test adapters**	For test plugs DIA 2 mm 0.079 in		Dark grey	TP2	1SNK900203R0000		20	1.70
		For test plugs DIA 4 mm 0.157 in			TP4	1SNK900205R0000		20	2.40
5	**Test connectors**	5.2 mm 0.205 in spacing		Dark grey	TC5	1SNK900200R0000		10	5.20
		End module, 5.2 mm 0.205 in			TC5-R1	1SNK900201R0000		10	5.20
6	**Label holders**			Dark grey	LH-J	1SNK900606R0000		100	0.73
7	**Terminal block markers**	Blank marker		White	MG-CPM 13 41790	1SNB041790R0512		1960	0.23
		Blank card			MC512	1SNK140000R0000		22	9.00
					MC512PA	1SNK149999R0000		20	10.00
		Universal wire markers holder		Grey	UMH	1SNK900611R0000		10	0.20

Complete list of accessories is indicated in the terminal block datasheet including end stops.
Some accessories such as jumper bars may modify the terminal block's ratings: Complete information available in the accessories section of the catalog.

Ground PI-Spring terminal blocks

Description	Color	Type	Part Number		Pkg qty	Weight (1 pce) g
Ground	Green-yellow	ZK2.5-T1-PE	1SNK705550R0000		25	21.53

1SNK162075S0201

Technical data valid for copper conductors only.

ZK2.5-T1 PI-Spring terminal blocks

Triple deck with 1 feed-through circuit - 5.2 mm 0.205 in spacing

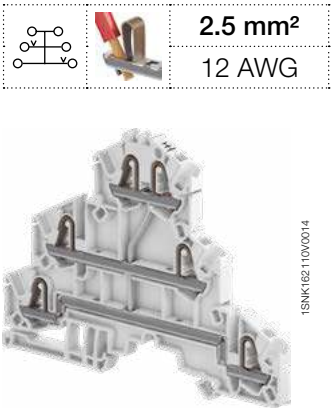

2.5 mm²
12 AWG

1SNK162110V0014

ZK2.5-T1

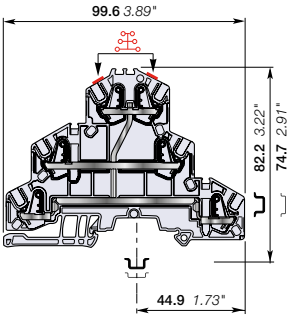

5.2 mm 0.205 in spacing

Description

Find the same functionalities as ZK2.5-T3 and ease one potential distribution on 6 independent connections.

Ordering details

Description		Color	Type	Part Number		Pkg qty	Weight (1 pce) g
Feed-through	1 feed-through circuit	Grey	ZK2.5-T1	1SNK705511R0000		25	17.33

Main technical data

Connecting capacity		IEC	UL - CSA
1 conductor per clamp	Rigid - Solid / Stranded	0.2 ... 4 mm²	26 ... 12 AWG
	Flexible	0.22 ... 2.5 mm²	
	with non insulated ferrule	0.22 ... 2.5 mm²	26 ... 14 AWG
	with insulated ferrule	0.22 ... 2.5 mm²	26 ... 14 AWG
2 conductors per clamp	Flexible with twin ferrule	0.22 ... 0.5 mm²	26 ... 20 AWG
Rated current / Rated cross section		22 A / 2.5 mm²	20 A / 12 AWG
Rated short-time withstand current (1s)		300 A	
Short Circuit Current Rating (with specific conditions)			
Rated voltage		500 V	300 V
Impulse withstand voltage		8000 V	
Protection		IP20	NEMA 1
Increased safety Ex e		440 V 20 A IEC/EN 60079-7 - IM2 II 2 GD Ex eb I/IIC/IIIC	

Mounting instructions

Rail		TH 35-7.5, TH 35-15
Wire stripping length		11 mm 0.433 in
Tool (for flexible conductor without ferrule)		Flat screwdriver Ø 3.5 mm Ø 0.138 in

The connecting capacity data for one Rigid - Solid / Stranded - Flexible conductor (when applicable) is a mandatory information required by IEC, UL and CSA standards (Copper conductors). All other data are provided as supplementary information only. For more details, please consult our CB, UL or CSA certificates and technical datasheet available on http://www.TE.com

CE | CB | RoHS | USR CNR | CSA | EAC | ATEX | IECEx | BV

Accessories

	Description			Color	Type	Part Number		Pkg qty	Weight (1 pce) g
1	**End stops**	10 mm	0.394 in	Dark grey	BAZH1	1SNK900102R0000		20	24.00
2	**End sections**	0.8 mm	0.031 in	Dark grey	EK2.5-T3	1SNK705961R0000		20	4.76
3	**Jumper bars**	2 poles	32 A (IEC)	Orange	JB5-2	1SNK905302R0000		50	1.30
		3 poles	32 A (IEC)		JB5-3	1SNK905303R0000		50	2.00
		4 poles	32 A (IEC)		JB5-4	1SNK905304R0000		50	2.70
		5 poles	32 A (IEC)		JB5-5	1SNK905305R0000		50	3.50
		10 poles	32 A (IEC)		JB5-10	1SNK905310R0000		30	7.10
		50 poles	32 A (IEC)		JB5-50	1SNK905350R0000		10	36.00
4	**Test adapters**	For test plugs DIA 2 mm 0.079 in		Dark grey	TP2	1SNK900203R0000		20	1.70
		For test plugs DIA 4 mm 0.157 in			TP4	1SNK900205R0000		20	2.40
5	**Test connectors**	5.2 mm 0.205 in spacing		Dark grey	TC5	1SNK900200R0000		10	5.20
		End module, 5.2 mm 0.205 in			TC5-R1	1SNK900201R0000		10	5.20
6	**Label holders**			Dark grey	LH-J	1SNK900606R0000		100	0.73
7	**Terminal block markers**	Blank marker		White	MG-CPM 13 41790	1SNB041790R0512		1960	0.23
		Blank card			MC512	1SNK140000R0000		22	9.00
					MC512PA	1SNK149999R0000		20	10.00
		Universal wire markers holder		Grey	UMH	1SNK900611R0000		10	0.20

Complete list of accessories is indicated in the terminal block datasheet including end stops.
Some accessories such as jumper bars may modify the terminal block's ratings: Complete information available in the accessories section of the catalog.

Ground PI-Spring terminal blocks

Description	Color	Type	Part Number		Pkg qty	Weight (1 pce) g
Ground	Green-yellow	ZK2.5-T1-PE	1SNK705550R0000		25	21.53

1SNK162076S0201

Technical data valid for copper conductors only.

ZK2.5-L-L-PE PI-Spring terminal blocks

Triple deck with 2 feed-through circuits and 1 ground circuit - 5.2 mm 0.205 in spacing

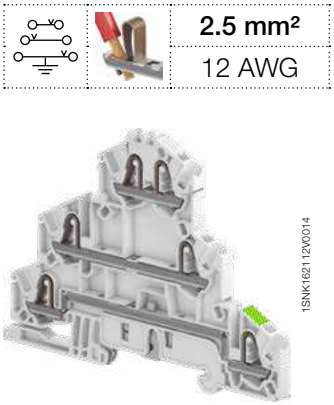

2.5 mm²
12 AWG

1SNK162112V0014

ZK2.5-L-L-PE

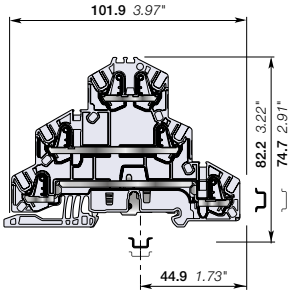

5.2 mm 0.205 in spacing

Description

Combine high performance with compact dimensions:
- 500V IEC 300 V UL,
- 2 feed through circuits and 1 ground circuit in just 5.2 mm 0.205 in spacing,
- 1 jumper channel and a large input and output marker zone on each deck,
- designed for easy wiring.

Ordering details

Description		Color	Type	Part Number		Pkg qty	Weight (1 pce) g
Feed-through + ground	2 feed-through circuits and 1 ground circuit	Grey, Green-yellow	ZK2.5-L-L-PE	1SNK705512R0000		25	21.38

Main technical data

Connecting capacity		IEC	UL - CSA
1 conductor per clamp	Rigid - Solid / Stranded	0.2 ... 4 mm²	26 ... 12 AWG
	Flexible	0.22 ... 2.5 mm²	
	with non insulated ferrule	0.22 ... 2.5 mm²	26 ... 14 AWG
	with insulated ferrule	0.22 ... 2.5 mm²	26 ... 14 AWG
2 conductors per clamp	Flexible with twin ferrule	0.22 ... 0.5 mm²	26 ... 20 AWG
Rated current / Rated cross section		22 A / 2.5 mm²	20 A / 12 AWG
Rated short-time withstand current (1s)		300 A	396 A
Short Circuit Current Rating (with specific conditions)			
Rated voltage		500 V	300 V
Impulse withstand voltage		8000 V	
Protection		IP20	NEMA 1
Increased safety Ex e		440 V 20 A IEC/EN 60079-7 - IM2 II 2 GD Ex eb I/IIC/IIIC	

Mounting instructions

Rail	TH 35-7.5, TH 35-15
Wire stripping length	11 mm 0.433 in
Tool (for flexible conductor without ferrule)	Flat screwdriver Ø 3.5 mm Ø 0.138 in

The connecting capacity data for one Rigid - Solid / Stranded - Flexible conductor (when applicable) is a mandatory information required by IEC, UL and CSA standards (Copper conductors). All other data are provided as supplementary information only. For more details, please consult our CB, UL or CSA certificates and technical datasheet available on http://www.TE.com

CE, CB, RoHS, USR CNR, CSA, EAC, ATEX, IECEx, BV

Accessories

	Description			Color	Type	Part Number		Pkg qty	Weight (1 pce) g
1	**End stops**	10 mm	0.394 in	Dark grey	BAZH1	1SNK900102R0000		20	24.00
2	**End sections**	0.8 mm	0.031 in	Dark grey	EK2.5-T3	1SNK705961R0000		20	4.76
3	**Jumper bars**	2 poles	32 A (IEC)	Orange	JB5-2	1SNK905302R0000		50	1.30
		3 poles	32 A (IEC)		JB5-3	1SNK905303R0000		50	2.00
		4 poles	32 A (IEC)		JB5-4	1SNK905304R0000		50	2.70
		5 poles	32 A (IEC)		JB5-5	1SNK905305R0000		50	3.50
		10 poles	32 A (IEC)		JB5-10	1SNK905310R0000		30	7.10
		50 poles	32 A (IEC)		JB5-50	1SNK905350R0000		10	36.00
4	**Test adapters**	For test plugs DIA 2 mm 0.079 in		Dark grey	TP2	1SNK900203R0000		20	1.70
		For test plugs DIA 4 mm 0.157 in			TP4	1SNK900205R0000		20	2.40
5	**Test connectors**	5.2 mm 0.205 in spacing		Dark grey	TC5	1SNK900200R0000		10	5.20
		End module, 5.2 mm 0.205 in			TC5-R1	1SNK900201R0000		10	5.20
6	**Label holders**			Dark grey	LH-J	1SNK900606R0000		100	0.73
7	**Terminal block markers**	Blank marker		White	MG-CPM 13 41790	1SNB041790R0512		1960	0.23
		Blank card			MC512	1SNK140000R0000		22	9.00
					MC512PA	1SNK149999R0000		20	10.00
		Universal wire markers holder		Grey	UMH	1SNK900611R0000		10	0.20

Complete list of accessories is indicated in the terminal block datasheet including end stops.
Some accessories such as jumper bars may modify the terminal block's ratings: Complete information available in the accessories section of the catalog.

Feed-through PI-Spring terminal blocks

Description	Color	Type	Part Number		Pkg qty	Weight (1 pce) g
Feed-through	Grey	ZK2.5-T3	1SNK705510R0000		25	17.33

1SNK162078S0201

Technical data valid for copper conductors only.

ZK2.5-L-N-PE PI-Spring terminal blocks

Triple deck with 2 feed-through circuits and 1 ground circuit - 5.2 mm 0.205 in spacing

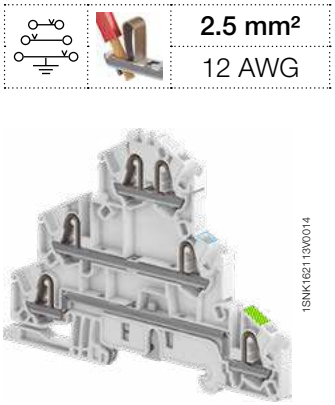

2.5 mm²
12 AWG

1SNK162113V0014

ZK2.5-L-N-PE

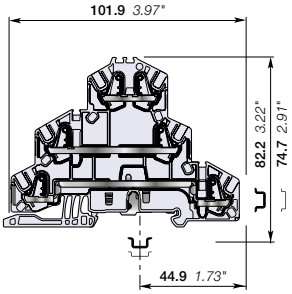

5.2 mm 0.205 in spacing

Description

Combine high performance with compact dimensions:
- 500 V IEC 300 V UL,
- 2 feed through circuits, phase and neutral, and 1 ground circuit in just 5.2 mm 0.205 in spacing,
- 1 jumper channel and a large input and output marker zone on each deck,
- designed for easy wiring.

Ordering details

Description		Color	Type	Part Number		Pkg qty	Weight (1 pce) g
Feed-through + ground	2 feed-through circuits and 1 ground circuit	Blue, grey, Green-yellow	ZK2.5-L-N-PE	1SNK705513R0000		25	21.38

Main technical data

Connecting capacity		IEC	UL - CSA
1 conductor per clamp	Rigid - Solid / Stranded	0.2 ... 4 mm²	26 ... 12 AWG
	Flexible	0.22 ... 2.5 mm²	
	with non insulated ferrule	0.22 ... 2.5 mm²	26 ... 14 AWG
	with insulated ferrule	0.22 ... 2.5 mm²	26 ... 14 AWG
2 conductors per clamp	Flexible with twin ferrule	0.22 ... 0.5 mm²	26 ... 20 AWG
Rated current / Rated cross section		22 A / 2.5 mm²	20 A / 12 AWG
Rated short-time withstand current (1s)		300 A	396 A
Short Circuit Current Rating (with specific conditions)			
Rated voltage		500 V	300 V
Impulse withstand voltage		8000 V	
Protection		IP20	NEMA 1
Increased safety Ex e		440 V 20 A IEC/EN 60079-7 - IM2 II 2 GD Ex eb I/IIC/IIIC	

Mounting instructions

Rail	TH 35-7.5, TH 35-15
Wire stripping length	11 mm 0.433 in
Tool (for flexible conductor without ferrule)	Flat screwdriver Ø 3.5 mm Ø 0.138 in

The connecting capacity data for one Rigid - Solid / Stranded - Flexible conductor (when applicable) is a mandatory information required by IEC, UL and CSA standards (Copper conductors). All other data are provided as supplementary information only. For more details, please consult our CB, UL or CSA certificates and technical datasheet available on http://www.TE.com

CE, CB, RoHS, USR CNR, CSA, EAC, ATEX, IECEx, BV

Accessories

	Description			Color	Type	Part Number		Pkg qty	Weight (1 pce) g
1	**End stops**	10 mm	0.394 in	Dark grey	BAZH1	1SNK900102R0000		20	24.00
2	**End sections**	0.8 mm	0.031 in	Dark grey	EK2.5-T3	1SNK705961R0000		20	4.76
3	**Jumper bars**	2 poles	32 A (IEC)	Orange	JB5-2	1SNK905302R0000		50	1.30
		3 poles	32 A (IEC)		JB5-3	1SNK905303R0000		50	2.00
		4 poles	32 A (IEC)		JB5-4	1SNK905304R0000		50	2.70
		5 poles	32 A (IEC)		JB5-5	1SNK905305R0000		50	3.50
		10 poles	32 A (IEC)		JB5-10	1SNK905310R0000		30	7.10
		50 poles	32 A (IEC)		JB5-50	1SNK905350R0000		10	36.00
4	**Test adapters**	For test plugs DIA 2 mm 0.079 in		Dark grey	TP2	1SNK900203R0000		20	1.70
		For test plugs DIA 4 mm 0.157 in			TP4	1SNK900205R0000		20	2.40
5	**Test connectors**	5.2 mm 0.205 in spacing		Dark grey	TC5	1SNK900200R0000		10	5.20
		End module, 5.2 mm 0.205 in			TC5-R1	1SNK900201R0000		10	5.20
6	**Label holders**			Dark grey	LH-J	1SNK900606R0000		100	0.73
7	**Terminal block markers**	Blank marker		White	MG-CPM 13 41790	1SNB041790R0512		1960	0.23
		Blank card			MC512	1SNK140000R0000		22	9.00
					MC512PA	1SNK149999R0000		20	10.00
		Universal wire markers holder		Grey	UMH	1SNK900611R0000		10	0.20

Complete list of accessories is indicated in the terminal block datasheet including end stops.
Some accessories such as jumper bars may modify the terminal block's ratings: Complete information available in the accessories section of the catalog.

Feed-through PI-Spring terminal blocks

Description	Color	Type	Part Number		Pkg qty	Weight (1 pce) g
Feed-through	Grey	ZK2.5-T3	1SNK705510R0000		25	17.33

1SNK162079S0201

Technical data valid for copper conductors only.

ZK2.5-T1-PE PI-Spring terminal blocks

Triple deck with 1 ground circuit - 5.2 mm 0.205 in spacing

2.5 mm²
12 AWG

1SNK162111V0014

ZK2.5-T1-PE

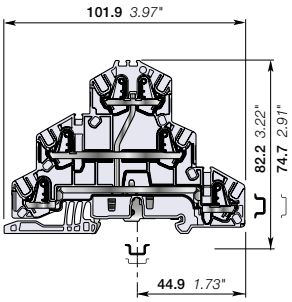

5.2 mm 0.205 in spacing

Description

Improve the safety of your installation in the event of a short-circuit thanks to our screwless rail contact:

- Rail contact non operator dependent,
- Performances above the requirements of the IEC 60947-7-2 terminal block standard,
- Secured snap on or off the rail,
- Profile aligned with ZK2.5-T3,
- 1 jumper channel on bottom and middle decks.

Ordering details

Description		Color	Type	Part Number		Pkg qty	Weight (1 pce) g
Ground	1 ground circuit	Green-yellow	ZK2.5-T1-PE	1SNK705550R0000		25	21.53

Main technical data

Connecting capacity		IEC	UL - CSA
1 conductor per clamp	Rigid - Solid / Stranded	0.2 ... 4 mm²	26 ... 12 AWG
	Flexible	0.22 ... 2.5 mm²	
	with non insulated ferrule	0.22 ... 2.5 mm²	26 ... 14 AWG
	with insulated ferrule	0.22 ... 2.5 mm²	26 ... 14 AWG
Rated cross section		2.5 mm²	12 AWG
Rated short-time withstand current (1s)		300 A	396 A
Protection		IP20	NEMA 1
Explosive atmosphere classification		IM2 II 2 GD Ex eb I/IIC/IIIC	

Mounting instructions

Rail		TH 35-7.5, TH 35-15
Wire stripping length		11 mm 0.433 in
Tool (for flexible conductor without ferrule)		Flat screwdriver Ø 3.5 mm Ø 0.138 in

The connecting capacity data for one Rigid - Solid / Stranded - Flexible conductor (when applicable) is a mandatory information required by IEC, UL and CSA standards (Copper conductors). All other data are provided as supplementary information only. For more details, please consult our CB, UL or CSA certificates and technical datasheet available on http://www.TE.com

CE, CB, RoHS, USR CNR, CSA, EAC, ATEX, IECEx, BV

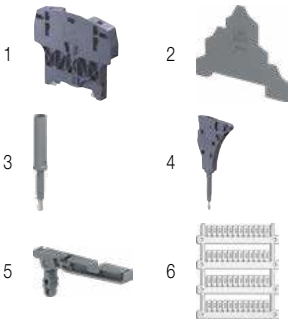

Accessories

	Description			Color	Type	Part Number		Pkg qty	Weight (1 pce) g
1	**End stops**	10 mm	0.394 in	Dark grey	BAZH1	1SNK900102R0000		20	24.00
2	**End sections**	0.8 mm	0.031 in	Dark grey	EK2.5-T3	1SNK705961R0000		20	4.76
3	**Test adapters**	For test plugs DIA 2 mm 0.079 in		Dark grey	TP2	1SNK900203R0000		20	1.70
		For test plugs DIA 4 mm 0.157 in			TP4	1SNK900205R0000		20	2.40
4	**Test connectors**	5.2 mm 0.205 in spacing		Dark grey	TC5	1SNK900200R0000		10	5.20
		End module, 5.2 mm 0.205 in			TC5-R1	1SNK900201R0000		10	5.20
5	**Label holders**			Dark grey	LH-J	1SNK900606R0000		100	0.73
6	**Terminal block markers**	Blank marker		White	MG-CPM 13 41790	1SNB041790R0512		1960	0.23
		Blank card			MC512	1SNK140000R0000		22	9.00
					MC512PA	1SNK149999R0000		20	10.00
		Universal wire markers holder		Grey	UMH	1SNK900611R0000		10	0.20

Complete list of accessories is indicated in the terminal block datasheet including end stops.
Some accessories such as jumper bars may modify the terminal block's ratings: Complete information available in the accessories section of the catalog.

1SNK162077S0201

Technical data valid for copper conductors only.

ZK2.5-CH-4P-LR PI-Spring terminal blocks
Component holder - 5.2 mm 0.205 in spacing

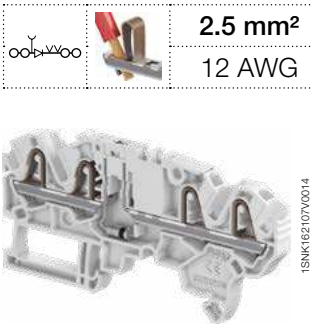

ZK2.5-CH-4P

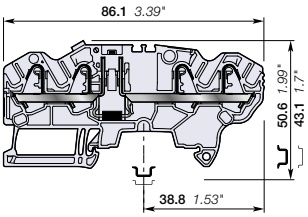

5.2 mm 0.205 in spacing

		2.5 mm²
		12 AWG

Description

- Protect your circuit with one 1N4007 diode,
- Clear identification of the diode orientation with marking identification on the top of the terminal block

Ordering details

Description		Color	Type	Part Number		Pkg qty	Weight (1 pce) g
Component holder	with 1 test socket DIA 2 mm 0.079 in	Grey	ZK2.5-CH-4P-LR	1SNK705710R0000		50	10.91

Main technical data

Connecting capacity		IEC	UL - CSA
1 conductor per clamp	Rigid - Solid / Stranded	0.2 ... 4 mm²	26 ... 12 AWG
	Flexible	0.22 ... 2.5 mm²	
	with non insulated ferrule	0.22 ... 2.5 mm²	26 ... 14 AWG
	with insulated ferrule	0.22 ... 2.5 mm²	26 ... 14 AWG
2 conductors per clamp	Flexible with twin ferrule	0.22 ... 0.5 mm²	26 ... 20 AWG
Rated current / Rated cross section		1 A / 2.5 mm²	1 A / 12 AWG
Rated short-time withstand current (1s)			
Short Circuit Current Rating (with specific conditions)			
Rated voltage		630 V	300 V
Impulse withstand voltage			
Protection		IP20	NEMA 1

Mounting instructions

Rail		TH 35-7.5, TH 35-15
Wire stripping length		11 mm 0.433 in
Tool (for flexible conductor without ferrule)		Flat screwdriver Ø 3.5 mm Ø 0.138 in

The connecting capacity data for one Rigid - Solid / Stranded - Flexible conductor (when applicable) is a mandatory information required by IEC, UL and CSA standards (Copper conductors). All other data are provided as supplementary information only. For more details, please consult our CB, UL or CSA certificates and technical datasheet available on http://www.TE.com

CE CB RoHS USR CNR CSA EAC BV

2

Accessories

	Description			Color	Type	Part Number		Pkg qty	Weight (1 pce) g
1	**End stops**	5.2 mm	0.205 in	Dark grey	BAZ1	1SNK900002R0000		50	5.30
2	**End sections**	2 mm	0.158 in	Dark grey	EK2.5-S-4P	1SNK705913R0000		20	2.94
3	**Jumper bars**	2 poles	32 A (IEC)	Orange	JB5-2	1SNK905302R0000		50	1.30
		3 poles	32 A (IEC)		JB5-3	1SNK905303R0000		50	2.00
		4 poles	32 A (IEC)		JB5-4	1SNK905304R0000		50	2.70
		5 poles	32 A (IEC)		JB5-5	1SNK905305R0000		50	3.50
		10 poles	32 A (IEC)		JB5-10	1SNK905310R0000		30	7.10
		50 poles	32 A (IEC)		JB5-50	1SNK905350R0000		10	36.00
4	**Circuit separators**	3 mm	0.118 in	Dark grey	CS-R3	1SNK900107R0000		20	6.40
5	**Test adapters**	For test plugs DIA 2 mm 0.079 in		Dark grey	TP2	1SNK900203R0000		20	1.70
		For test plugs DIA 4 mm 0.157 in			TP4	1SNK900205R0000		20	2.40
6	**Test connectors**	5.2 mm 0.205 in spacing		Dark grey	TC5	1SNK900200R0000		10	5.20
		End module, 5.2 mm 0.205 in			TC5-R1	1SNK900201R0000		10	5.20
7	**Terminal block markers**	Blank marker		White	MG-CPM 13 41790	1SNB041790R0512		1960	0.23
		Blank card			MC512	1SNK140000R0000		22	9.00
					MC512PA	1SNK149999R0000		20	10.00
		Universal wire markers holder		Grey	UMH	1SNK900611R0000		10	0.20

Complete list of accessories is indicated in the terminal block datasheet including end stops.
Some accessories such as jumper bars may modify the terminal block's ratings: Complete information available in the accessories section of the catalog.

1SNK162071S0201

Technical data valid for copper conductors only.

ZK2.5-CH-4P-RL PI-Spring terminal blocks

Component holder - 5.2 mm 0.205 in spacing

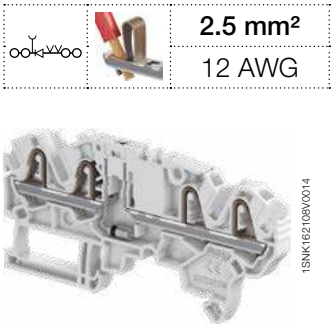

ZK2.5-CH-4P

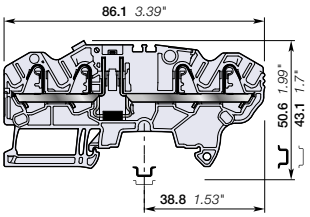

5.2 mm 0.205 in spacing

		2.5 mm²
		12 AWG

Description

- Protect your circuit with one 1N4007 diode,
- Clear identification of the diode orientation with marking identification on the top of the terminal block

Ordering details

Description		Color	Type	Part Number		Pkg qty	Weight (1 pce) g
Component holder	with 1 test socket DIA 2 mm 0.079 in	Grey	ZK2.5-CH-4P-RL	1SNK705711R0000		50	10.91

Main technical data

Connecting capacity		IEC	UL - CSA
1 conductor per clamp	Rigid - Solid / Stranded	0.2 ... 4 mm²	26 ... 12 AWG
	Flexible	0.22 ... 2.5 mm²	
	with non insulated ferrule	0.22 ... 2.5 mm²	26 ... 14 AWG
	with insulated ferrule	0.22 ... 2.5 mm²	26 ... 14 AWG
2 conductors per clamp	Flexible with twin ferrule	0.22 ... 0.5 mm²	26 ... 20 AWG
Rated current / Rated cross section		1 A / 2.5 mm²	1 A / 12 AWG
Rated short-time withstand current (1s)			
Short Circuit Current Rating (with specific conditions)			
Rated voltage		630 V	300 V
Impulse withstand voltage			
Protection		IP20	NEMA 1

Mounting instructions

Rail		TH 35-7.5, TH 35-15
Wire stripping length		11 mm 0.433 in
Tool (for flexible conductor without ferrule)		Flat screwdriver Ø 3.5 mm Ø 0.138 in

The connecting capacity data for one Rigid - Solid / Stranded - Flexible conductor (when applicable) is a mandatory information required by IEC, UL and CSA standards (Copper conductors). All other data are provided as supplementary information only. For more details, please consult our CB, UL or CSA certificates and technical datasheet available on http://www.TE.com

CE CB RoHS USR CNR CSA EAC BV

Accessories

	Description			Color	Type	Part Number		Pkg qty	Weight (1 pce) g
1	**End stops**	5.2 mm	0.205 in	Dark grey	BAZ1	1SNK900002R0000		50	5.30
2	**End sections**	2 mm	0.158 in	Dark grey	EK2.5-S-4P	1SNK705913R0000		20	2.94
3	**Jumper bars**	2 poles	32 A (IEC)	Orange	JB5-2	1SNK905302R0000		50	1.30
		3 poles	32 A (IEC)		JB5-3	1SNK905303R0000		50	2.00
		4 poles	32 A (IEC)		JB5-4	1SNK905304R0000		50	2.70
		5 poles	32 A (IEC)		JB5-5	1SNK905305R0000		50	3.50
		10 poles	32 A (IEC)		JB5-10	1SNK905310R0000		30	7.10
		50 poles	32 A (IEC)		JB5-50	1SNK905350R0000		10	36.00
4	**Circuit separators**	3 mm	0.118 in	Dark grey	CS-R3	1SNK900107R0000		20	6.40
5	**Test adapters**	For test plugs DIA 2 mm 0.079 in		Dark grey	TP2	1SNK900203R0000		20	1.70
		For test plugs DIA 4 mm 0.157 in			TP4	1SNK900205R0000		20	2.40
6	**Test connectors**	5.2 mm 0.205 in spacing		Dark grey	TC5	1SNK900200R0000		10	5.20
		End module, 5.2 mm 0.205 in			TC5-R1	1SNK900201R0000		10	5.20
7	**Terminal block markers**	Blank marker		White	MG-CPM 13 41790	1SNB041790R0512		1960	0.23
		Blank card			MC512	1SNK140000R0000		22	9.00
					MC512PA	1SNK149999R0000		20	10.00
		Universal wire markers holder		Grey	UMH	1SNK900611R0000		10	0.20

Complete list of accessories is indicated in the terminal block datasheet including end stops.
Some accessories such as jumper bars may modify the terminal block's ratings: Complete information available in the accessories section of the catalog.

1SNK162072S0201

Technical data valid for copper conductors only.

ZK2.5-D-CH-UD PI-Spring terminal blocks
Component holder - 5.2 mm 0.205 in spacing

2.5 mm²	
12 AWG	

1SNK162101V0014

ZK2.5-D-CH

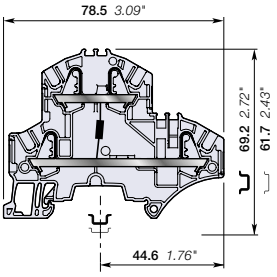

5.2 mm 0.205 in spacing

Description

Protect your circuit with one 1N4007 diode.

Ordering details

Description	Color	Type	Part Number		Pkg qty	Weight (1 pce) g
Component holder	Grey	ZK2.5-D-CH-UD	1SNK705213R0000		50	11.20

Main technical data

Connecting capacity		IEC	UL - CSA
1 conductor per clamp	Rigid - Solid / Stranded	0.2 ... 4 mm²	26 ... 12 AWG
	Flexible	0.22 ... 2.5 mm²	
	with non insulated ferrule	0.22 ... 2.5 mm²	26 ... 14 AWG
	with insulated ferrule	0.22 ... 2.5 mm²	26 ... 14 AWG
2 conductors per clamp	Flexible with twin ferrule	0.22 ... 0.5 mm²	26 ... 20 AWG
Rated current / Rated cross section		24 A / 2.5 mm²	20 A / 12 AWG
Rated short-time withstand current (1s)		300 A	
Short Circuit Current Rating (with specific conditions)			
Rated voltage		800 V	600 V
Impulse withstand voltage			
Protection		IP20	NEMA 1

Mounting instructions

Rail		TH 35-7.5, TH 35-15
Wire stripping length		11 mm 0.443 in
Tool (for flexible conductor without ferrule)		Flat screwdriver Ø 3.5 mm Ø 0.138 in

The connecting capacity data for one Rigid - Solid / Stranded - Flexible conductor (when applicable) is a mandatory information required by IEC, UL and CSA standards (Copper conductors). All other data are provided as supplementary information only. For more details, please consult our CB, UL or CSA certificates and technical datasheet available on http://www.TE.com

CE RoHS USR CNR CSA EAC

2

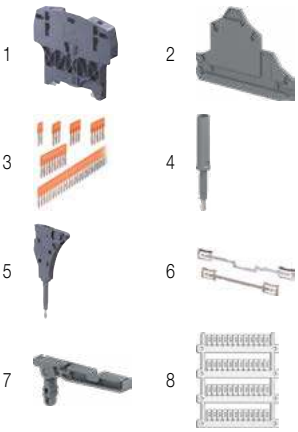

Accessories

	Description			Color	Type	Part Number		Pkg qty	Weight (1 pce) g
1	End stops	10 mm	0.394 in	Dark grey	BAZH1	1SNK900102R0000		20	24.00
2	End sections	2 mm	0.079 in	Dark grey	EK2.5-D2	1SNK705960R0000		20	3.40
3	Jumper bars	2 poles	32 A (IEC)	Orange	JB5-2	1SNK905302R0000		50	1.30
		3 poles	32 A (IEC)		JB5-3	1SNK905303R0000		50	2.00
		4 poles	32 A (IEC)		JB5-4	1SNK905304R0000		50	2.70
		5 poles	32 A (IEC)		JB5-5	1SNK905305R0000		50	3.50
		10 poles	32 A (IEC)		JB5-10	1SNK905310R0000		30	7.10
		50 poles	32 A (IEC)		JB5-50	1SNK905350R0000		10	36.00
4	Test adapters	For test plugs DIA 2 mm 0.079 in		Dark grey	TP2	1SNK900203R0000		20	1.70
		For test plugs DIA 4 mm 0.157 in			TP4	1SNK900205R0000		20	2.40
5	Test connectors	5.2 mm 0.205 in spacing		Dark grey	TC5	1SNK900200R0000		10	5.20
		End module, 5.2 mm 0.205 in			TC5-R1	1SNK900201R0000		10	5.20
6	Shield connectors				SHB	1SNK900602R0000		20	4.90
7	Label holders			Dark grey	LH-J	1SNK900606R0000		100	0.73
8	Terminal block markers	Blank marker		White	MG-CPM 13 41790	1SNB041790R0512		1960	0.23
		Blank card			MC512	1SNK140000R0000		22	9.00
					MC512PA	1SNK149999R0000		20	10.00
		Universal wire markers holder		Grey	UMH	1SNK900611R0000		10	0.20

Complete list of accessories is indicated in the terminal block datasheet including end stops.
Some accessories such as jumper bars may modify the terminal block's ratings: Complete information available in the accessories section of the catalog.

1SNK162066S0201

Technical data valid for copper conductors only.

ZK2.5-D-CH-DU PI-Spring terminal blocks
Component holder - 5.2 mm 0.205 in spacing

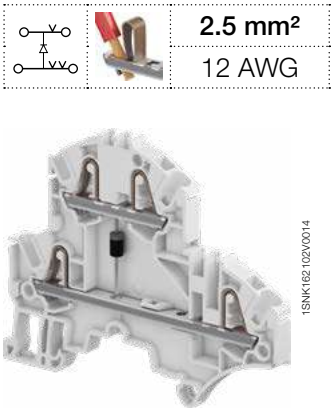

ZK2.5-D-CH

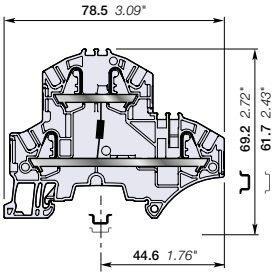

5.2 mm 0.205 in spacing

		2.5 mm²
		12 AWG

Description

Protect your circuit with one 1N4007 diode.

Ordering details

Description	Color	Type	Part Number		Pkg qty	Weight (1 pce) g
Component holder	Grey	ZK2.5-D-CH-DU	1SNK705214R0000		50	11.20

Main technical data

Connecting capacity		IEC	UL - CSA
1 conductor per clamp	Rigid - Solid / Stranded	0.2 ... 4 mm²	26 ... 12 AWG
	Flexible	0.22 ... 2.5 mm²	
	with non insulated ferrule	0.22 ... 2.5 mm²	26 ... 14 AWG
	with insulated ferrule	0.22 ... 2.5 mm²	26 ... 14 AWG
2 conductors per clamp	Flexible with twin ferrule	0.22 ... 0.5 mm²	26 ... 20 AWG
Rated current / Rated cross section		24 A / 2.5 mm²	20 A / 12 AWG
Rated short-time withstand current (1s)		300 A	
Short Circuit Current Rating (with specific conditions)			
Rated voltage		800 V	600 V
Impulse withstand voltage			
Protection		IP20	NEMA 1

Mounting instructions

Rail		TH 35-7.5, TH 35-15
Wire stripping length		11 mm 0.443 in
Tool (for flexible conductor without ferrule)		Flat screwdriver Ø 3.5 mm Ø 0.138 in

The connecting capacity data for one Rigid - Solid / Stranded - Flexible conductor (when applicable) is a mandatory information required by IEC, UL and CSA standards (Copper conductors). All other data are provided as supplementary information only. For more details, please consult our CB, UL or CSA certificates and technical datasheet available on http://www.TE.com

CE RoHS USR CNR CSA EAC

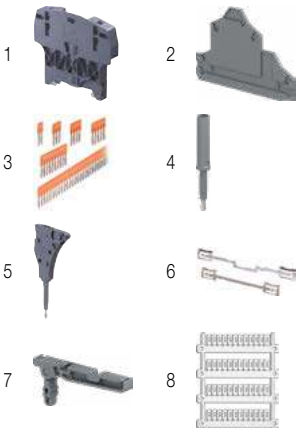

Accessories

	Description			Color	Type	Part Number		Pkg qty	Weight (1 pce) g
1	**End stops**	10 mm	0.394 in	Dark grey	BAZH1	1SNK900102R0000		20	24.00
2	**End sections**	2 mm	0.079 in	Dark grey	EK2.5-D2	1SNK705960R0000		20	3.40
3	**Jumper bars**	2 poles	32 A (IEC)	Orange	JB5-2	1SNK905302R0000		50	1.30
		3 poles	32 A (IEC)		JB5-3	1SNK905303R0000		50	2.00
		4 poles	32 A (IEC)		JB5-4	1SNK905304R0000		50	2.70
		5 poles	32 A (IEC)		JB5-5	1SNK905305R0000		50	3.50
		10 poles	32 A (IEC)		JB5-10	1SNK905310R0000		30	7.10
		50 poles	32 A (IEC)		JB5-50	1SNK905350R0000		10	36.00
4	**Test adapters**	For test plugs DIA 2 mm 0.079 in		Dark grey	TP2	1SNK900203R0000		20	1.70
		For test plugs DIA 4 mm 0.157 in			TP4	1SNK900205R0000		20	2.40
5	**Test connectors**	5.2 mm 0.205 in spacing		Dark grey	TC5	1SNK900200R0000		10	5.20
		End module, 5.2 mm 0.205 in			TC5-R1	1SNK900201R0000		10	5.20
6	**Shield connectors**				SHB	1SNK900602R0000		20	4.90
7	**Label holders**			Dark grey	LH-J	1SNK900606R0000		100	0.73
8	**Terminal block markers**	Blank marker		White	MG-CPM 13 41790	1SNB041790R0512		1960	0.23
		Blank card			MC512	1SNK140000R0000		22	9.00
					MC512PA	1SNK149999R0000		20	10.00
		Universal wire markers holder		Grey	UMH	1SNK900611R0000		10	0.20

Complete list of accessories is indicated in the terminal block datasheet including end stops.
Some accessories such as jumper bars may modify the terminal block's ratings: Complete information available in the accessories section of the catalog.

1SNK162067S0201

Technical data valid for copper conductors only.

ZK2.5-D-CH2-DU-RL PI-Spring terminal blocks
Component holder - 5.2 mm 0.205 in spacing

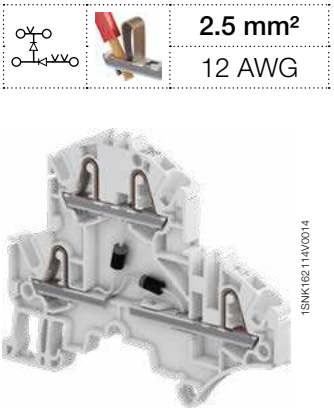

2.5 mm²	
12 AWG	

Description

- Protect your circuit with 1N4007 diodes;
- Convenient identification of the diodes orientation on the terminal block front side.

1SNK162114V0014

ZK2.5-D-CH2

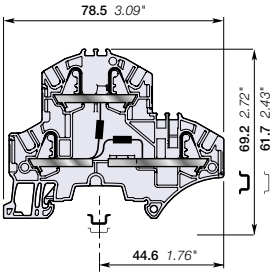

5.2 mm 0.205 in spacing

Ordering details

Description	Color	Type	Part Number		Pkg qty	Weight (1 pce) g
Component holder	Grey	ZK2.5-D-CH2-DU-RL	1SNK705219R0000		50	11.20

Main technical data

Connecting capacity		IEC	UL - CSA
1 conductor per clamp	Rigid - Solid / Stranded	0.2 ... 4 mm²	26 ... 12 AWG
	Flexible	0.22 ... 2.5 mm²	
	with non insulated ferrule	0.22 ... 2.5 mm²	26 ... 14 AWG
	with insulated ferrule	0.22 ... 2.5 mm²	26 ... 14 AWG
2 conductors per clamp	Flexible with twin ferrule	0.22 ... 0.5 mm²	26 ... 20 AWG
Rated current / Rated cross section		1 A / 2.5 mm²	/ 12 AWG
Rated short-time withstand current (1s)			
Short Circuit Current Rating (with specific conditions)			
Rated voltage		800 V	600 V
Impulse withstand voltage			
Protection		IP20	NEMA 1

Mounting instructions

Rail		TH 35-7.5, TH 35-15
Wire stripping length		11 mm 0.443 in
Tool (for flexible conductor without ferrule)		Flat screwdriver Ø 3.5 mm Ø 0.138 in

The connecting capacity data for one Rigid - Solid / Stranded - Flexible conductor (when applicable) is a mandatory information required by IEC, UL and CSA standards (Copper conductors). All other data are provided as supplementary information only. For more details, please consult our CB, UL or CSA certificates and technical datasheet available on http://www.TE.com

CE RoHS EAC

2

Accessories

	Description			Color	Type	Part Number		Pkg qty	Weight (1 pce) g
1	End stops	10 mm	0.394 in	Dark grey	BAZH1	1SNK900102R0000		20	24.00
2	End sections	2 mm	0.079 in	Dark grey	EK2.5-D2	1SNK705960R0000		20	3.40
3	Jumper bars	2 poles	32 A (IEC)	Orange	JB5-2	1SNK905302R0000		50	1.30
		3 poles	32 A (IEC)		JB5-3	1SNK905303R0000		50	2.00
		4 poles	32 A (IEC)		JB5-4	1SNK905304R0000		50	2.70
		5 poles	32 A (IEC)		JB5-5	1SNK905305R0000		50	3.50
		10 poles	32 A (IEC)		JB5-10	1SNK905310R0000		30	7.10
		50 poles	32 A (IEC)		JB5-50	1SNK905350R0000		10	36.00
4	Test adapters	For test plugs DIA 2 mm 0.079 in		Dark grey	TP2	1SNK900203R0000		20	1.70
		For test plugs DIA 4 mm 0.157 in			TP4	1SNK900205R0000		20	2.40
5	Test connectors	5.2 mm 0.205 in spacing		Dark grey	TC5	1SNK900200R0000		10	5.20
		End module, 5.2 mm 0.205 in			TC5-R1	1SNK900201R0000		10	5.20
6	Shield connectors				SHB	1SNK900602R0000		20	4.90
7	Terminal block markers	Blank marker		White	MG-CPM 13 41790	1SNB041790R0512		1960	0.23
		Blank card			MC512	1SNK140000R0000		22	9.00
					MC512PA	1SNK149999R0000		20	10.00
		Universal wire markers holder		Grey	UMH	1SNK900611R0000		10	0.20

Complete list of accessories is indicated in the terminal block datasheet including end stops.
Some accessories such as jumper bars may modify the terminal block's ratings: Complete information available in the accessories section of the catalog.

1SNK162073S0201

Technical data valid for copper conductors only.

SNK series, terminal blocks
Screw clamp technology

Technologies presentation			72
Overview			76
Feed-through			
4 mm² / 12 AWG	**ZS4**		80
6 mm² / 10 AWG	**ZS6**		81
	ZS6-3S and **ZS6-4S**	with 3 and 4 connections	82-83
10 mm² / 6 AWG	**ZS10**		84
16 mm² / 4 AWG	**ZS16**		85
25 mm² / 3 AWG	**ZS25**		86
35 mm² / 0 AWG	**ZS35**		87
50 mm² / 0 AWG	**ZS50**		88
70 mm² / 00 AWG	**ZS70**		89
95 mm² / 0000 AWG	**ZS95**		90
150 mm² / 350 Kcmil	**ZS150**		91
240 mm² / 240 Kcmil	**ZS240**		92
Ground			
4 mm² / 12 AWG	**ZS4-PE**		93
6 mm² / 10 AWG	**ZS6-PE**		94
	ZS6-3S-PE and **ZS6-4S-PE**	with 3 and 4 connections	95-96
10 mm² / 6 AWG	**ZS10-PE**		97
16 mm² / 4 AWG	**ZS16-PE**		98
25 mm² / 3 AWG	**ZS25-PE**		99
35 mm² / 2 AWG	**ZS35-PE**		100
35 mm²	**ZS35-PEN**	+ neutral	101
50 mm² / 0 AWG	**ZS50-PE**		102
70 mm² / 00 AWG	**ZS70-PE**		103
95 mm² / 0000 AWG	**ZS95-PE**		104
Disconnect with blade			
4 mm² / 10 AWG	**ZS4-S**, **ZS4-S-T**, **ZS4-S-R1** and **ZS4-S-T-R1**	with test	105-108
6 mm² / 10 AWG	**ZS6-S** and **ZS6-S-4S-T**	with test	109-110
10 mm² / 6 AWG	**ZS10-S**		111
Disconnect with plug			
4 mm² / 10 AWG	**ZS4-SP**, **ZS4-SP-T2**, **ZS4-SP-R1** and **ZS4-SP-T2-R1**	with test	112-115
10 mm² / 6 AWG	**ZS10-SP**		116
Fuse and marshalling cabinets application overview			118
For 5x20 and 5x25 mm fuses			
4 mm² / 10 AWG	**ZS4-SF1** and **ZS4-SF1-T**	with test	120-121
	ZS4-SF1-R	with fuse indicator and test	122-123
	ZS4-R1	feed-through	124
	ZS4-S-R3	disconnect with lever	125
For 5x20 mm fuses and marshalling cabinets application			
4 mm² / 10 AWG	**ZS4-SF**		126
	ZS4-SF-T	with test	127
	ZS4-SF-R	with fuse indicator and test	128-129
	ZS4-R2	feed-through	130
	ZS4-PE-R2	ground	131
	ZS4-S-R2	disconnect with lever	132
For 6.3x32 mm fuses (¼ x 1¼ in)			
10 mm² / 6 AWG	**ZS10-SF**		133
	ZS10-SF-R	with fuse indicator	134
	ZS10-S-R2	disconnect with lever	135
Double deck			
4 mm² / 12 AWG	**ZS4-D2** and **ZS4-D1**	2 and 1 feed-through circuits	136-137
6 mm² / 10 AWG	**ZS6-D2** and **ZS6-D1**	2 and 1 feed-through circuits	138-139
	ZS6-D2-PE	1 feed-through circuit and 1 ground circuit	140
	ZS6-D1-PE	1 ground circuit	141
4 mm² / 10 AWG	**ZS4-D2-S**	1 disconnect circuit and 1 feed-through circuit	142
	ZS4-D2-S-T	1 disconnect circuit + test and 1 feed-through circuit	143
	ZS4-D2-SF1	1 fuse circuit and 1 feed-through circuit	144
	ZS4-D2-SF1-R	1 fuse circuit + fuse indicator and 1 feed-through circuit	145
Triple deck			
4 mm² / 12 AWG	**ZS4-T3**	3 feed-through circuits	146
4 mm² / 10 AWG	**ZS4-T3-R1**	3 feed-through circuits	147
Component holder			
4 mm² / 12 AWG	**ZS4-D-CH-UD** and **ZS4-D-CH-DU**		148-149
Test and measurement			
Overview			150
10 mm² / 6 AWG	**ZS10-ST**		154
	ZS10-ST-1	for Potential Transformer circuits	155
	ZS10-ST-T4	for Current Transformer circuits	156
	ZS10-R1	feed-through	157
	ZS10-PE-R1	ground	158

3

Summary_3

TE Connectivity screw clamp technology benefits from 60 years of experience.

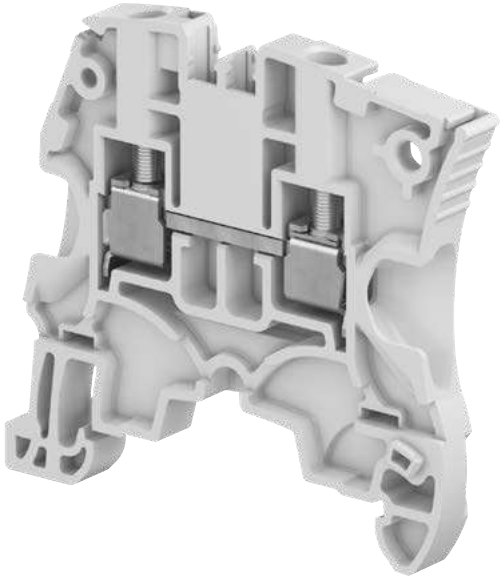

Speed up your projects

An optimized conductor guiding

Smooth connection process up to 2 conductors with or without ferrules thanks to funnel entry shape.
Also perfectly adapted to double ferrule shape 1
Security: flap avoiding the insertion of cable underneath the clamp 2.

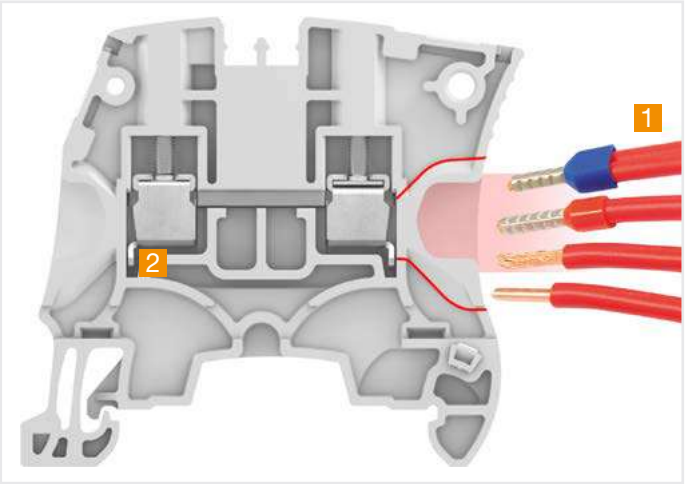

Engineered conductor entry

Better project identification

- Circuit identification is improved thanks to the 20% larger marking area
- Pre-mark by hand or with label on our flat marking surface and start immediately the wiring, before the final markers mounting
- Spare markers re-printing in case of modifications.

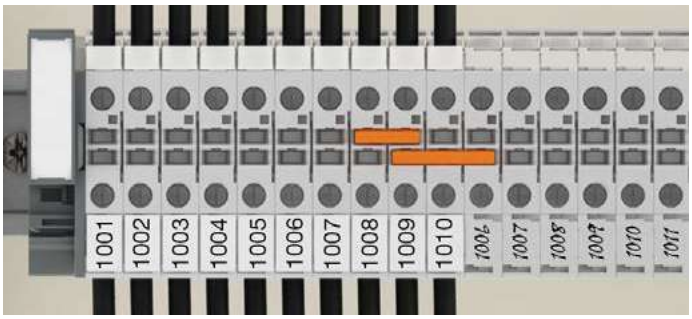

Clear circuit identification

1SNK161092S0201

Easy to install

Smart design facilitating assembly process.
Mounting, wiring, testing… made easy.

Avoid mounting and wiring errors: asymmetrical design allows immediate visual check in case of reversed terminal blocks.

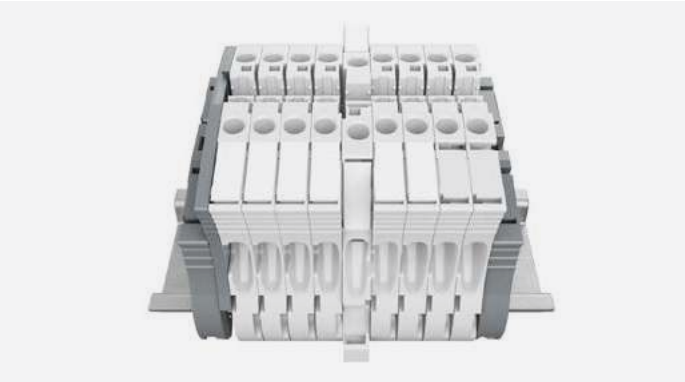

Asymmetrical design avoids mounting error

Minimize retightening campaigns
High torque resistance : the clamp is punched to increase the number of threads in contact by 30 % 1.
The TE Connectivity exclusive anti-release system creates a controlled locking-screw effect reinforced by the 2 overlapping tabs that maintain the clamp parts 2.

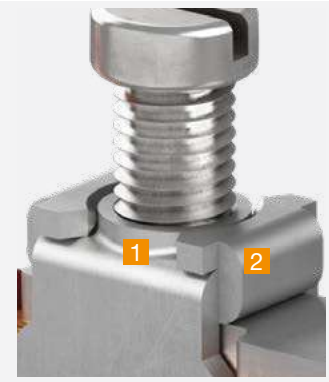

High torque resistance

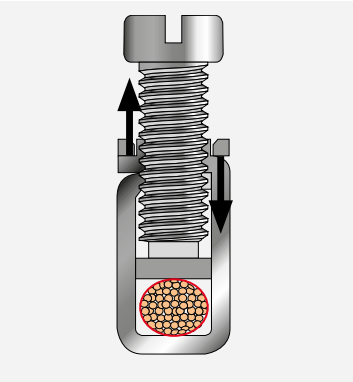

Anti-release system

Faster accessories mounting
Save up to 70% mounting time thanks to screwless accessories: jumpers, component plugs, test devices, end stops and snap-in ground terminal blocks.

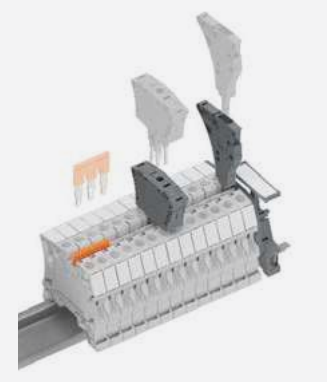

Screwless accessories

Snap-in ground terminal block for rapid installation

1SNK161092S0201

Easy to install

Smart design facilitating assembly process.
Mounting, wiring, testing… made easy.

Locking pin 1 allows quick and easy lock up to ten blocks in position at a time.

Closed jumper location allows great stiffness of the terminal block, optimal jumper guiding and avoids deflections while tightening.

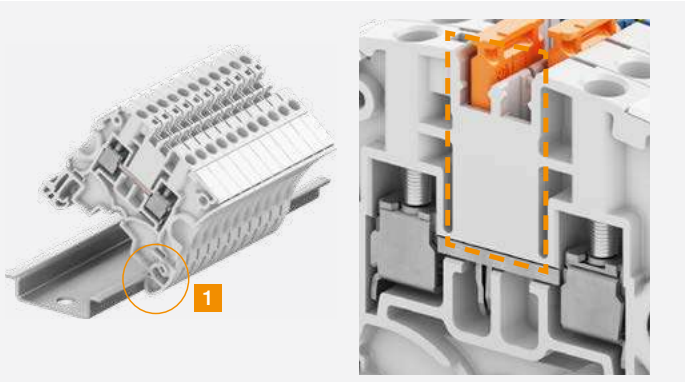

Lock up to ten blocks in position at a time

Closed jumper location for stiffness

Smart accessories
Flexible test solutions from individual insulated test adapter to test connectors for complete assemblies testing.
- Direct plug-in into jumpers channels
- 5, 6, 8 mm spacing, mixing various spacing is possible
- 1000 V rating.

Component holder plugs for series or parallel component mounting (resistors, filters, diodes..).
Can be installed after wiring.
Series plug offers screwless component connection (no soldering).

Plug-in individual test adapter

Plug-in test connector

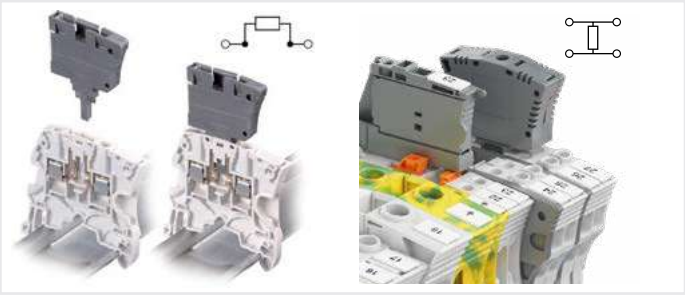

Series plug associated with disconnect blocks

Parallel plug to be installed between 2 blocks

Smart plug-in jumpers:
Pre-cut poles removable by hand: clean cut.
Insulated up to 1000 V (avoid use of separators).
Predefined shapes in molding to easily identify connected poles with a pen.

Pre-cut poles easy removable by hand

Predefined shape to identify connected poles

1SNK161092S0201

Optimized logistics

Reduce your accessories inventory by up to 50%

SNK PI-Spring, screw and pluggable ranges share the same accessories.
Reduced packaging adapted to the usage
(20 items packaging for some references).

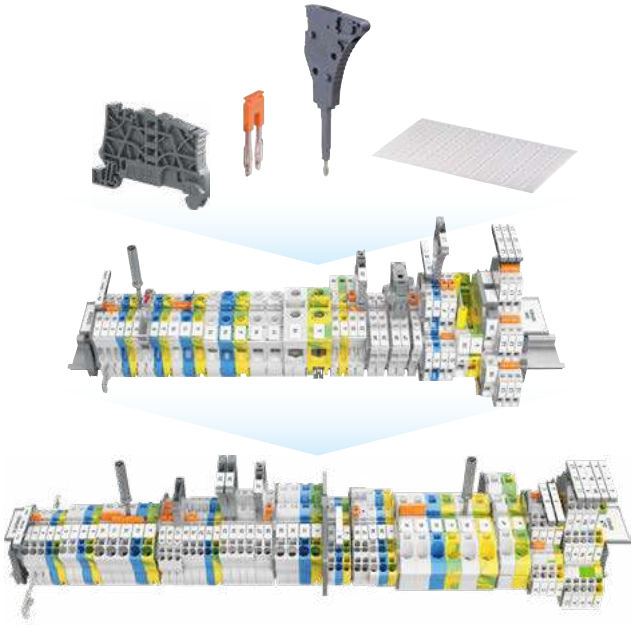

Shared accessories for SNK PI-Spring, screw and pluggable ranges

All end sections and circuit separators fit several types and sizes of blocks.

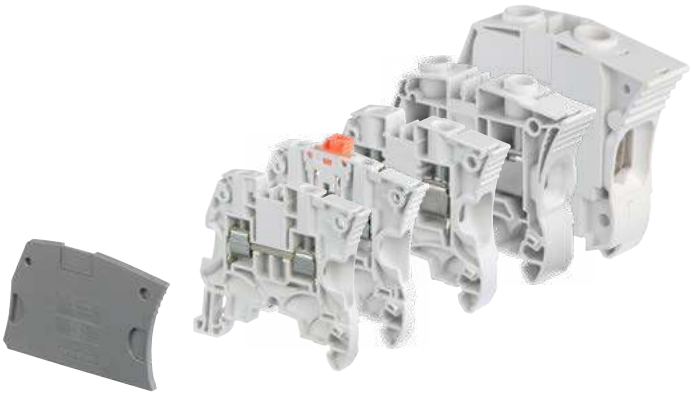

Stock only one end section for managing your assembly up to 240 mm²

Facilitate maintenance operations

Terminals can be individually removed from a terminal assembly equipped with markers:
TE Connectivity markers become independent after strip mounting,TE Connectivity markers remain on terminal in any situation.

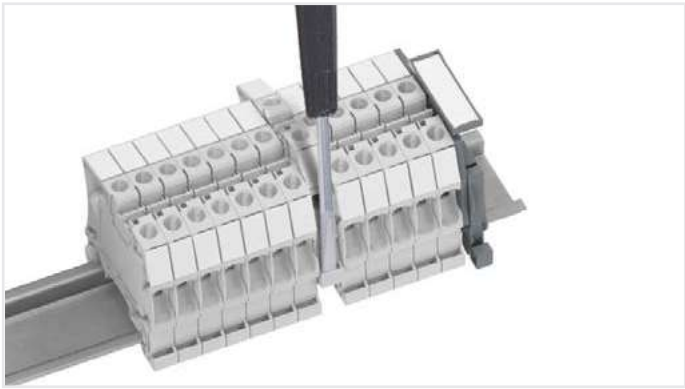

Maintenance operations facilitated

Reliable in harsh conditions

Qualified for worldwide markets, applications
and for severe environments: vibration, shock, corrosion…

1SNK161092S0201

2 Connections

Single deck
Feed-through
Ground
Disconnect
Fuse

3 Connections

Single deck
Feed-through
Ground

4 Connections

Single deck
Feed-through
Ground
Disconnect

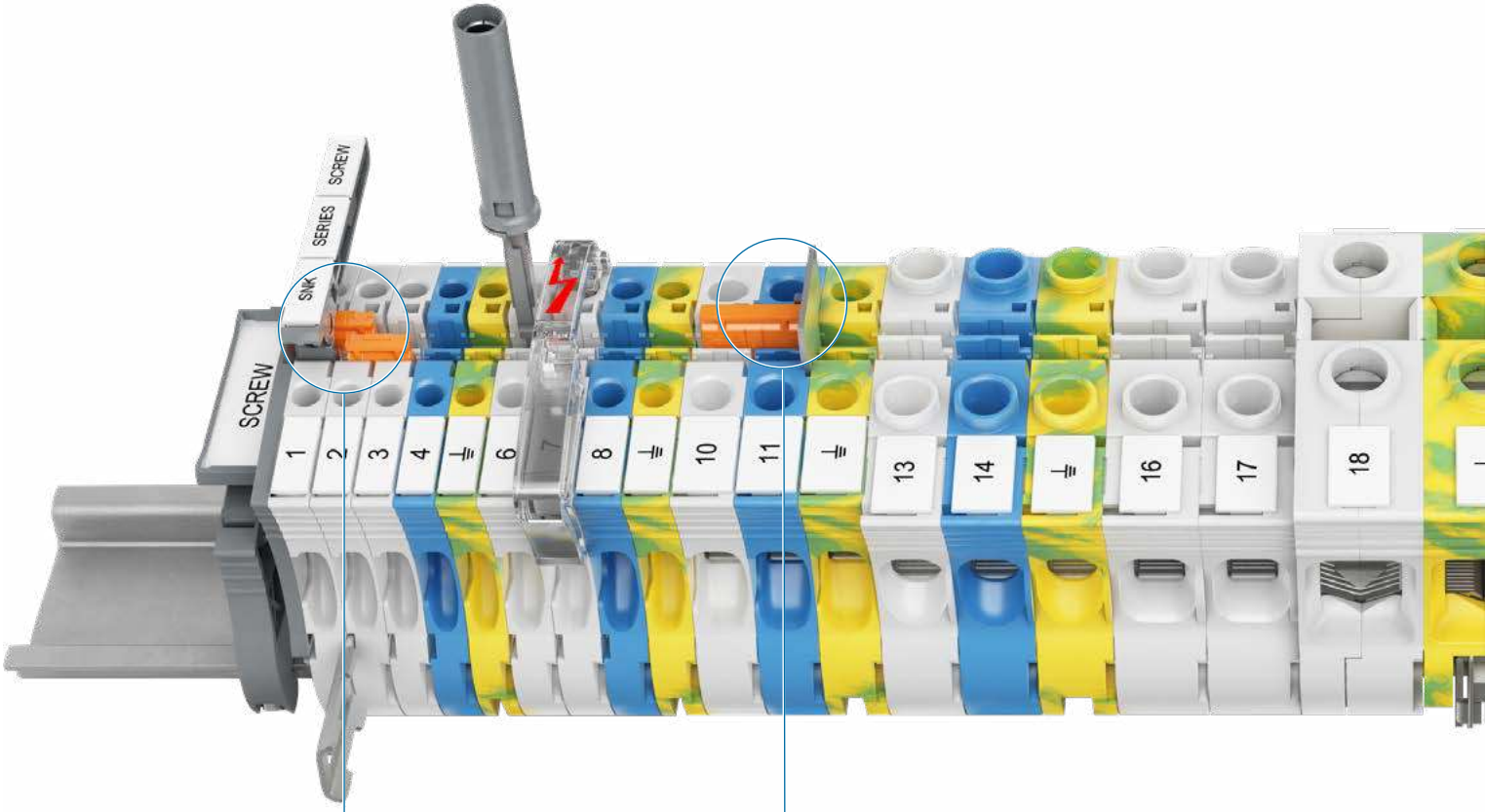

Double central channels
allows multiconfigurations (jumpering, testing and measuring)

Circuit separator
without spacing loss

2x2 Connections

Double deck
Feed-through
Ground
Disconnect
Fuse
Component holder

2 Connections

Test and measurement
Feed-through
Ground
Disconnect

3x2 Connections

Triple deck
Feed-through

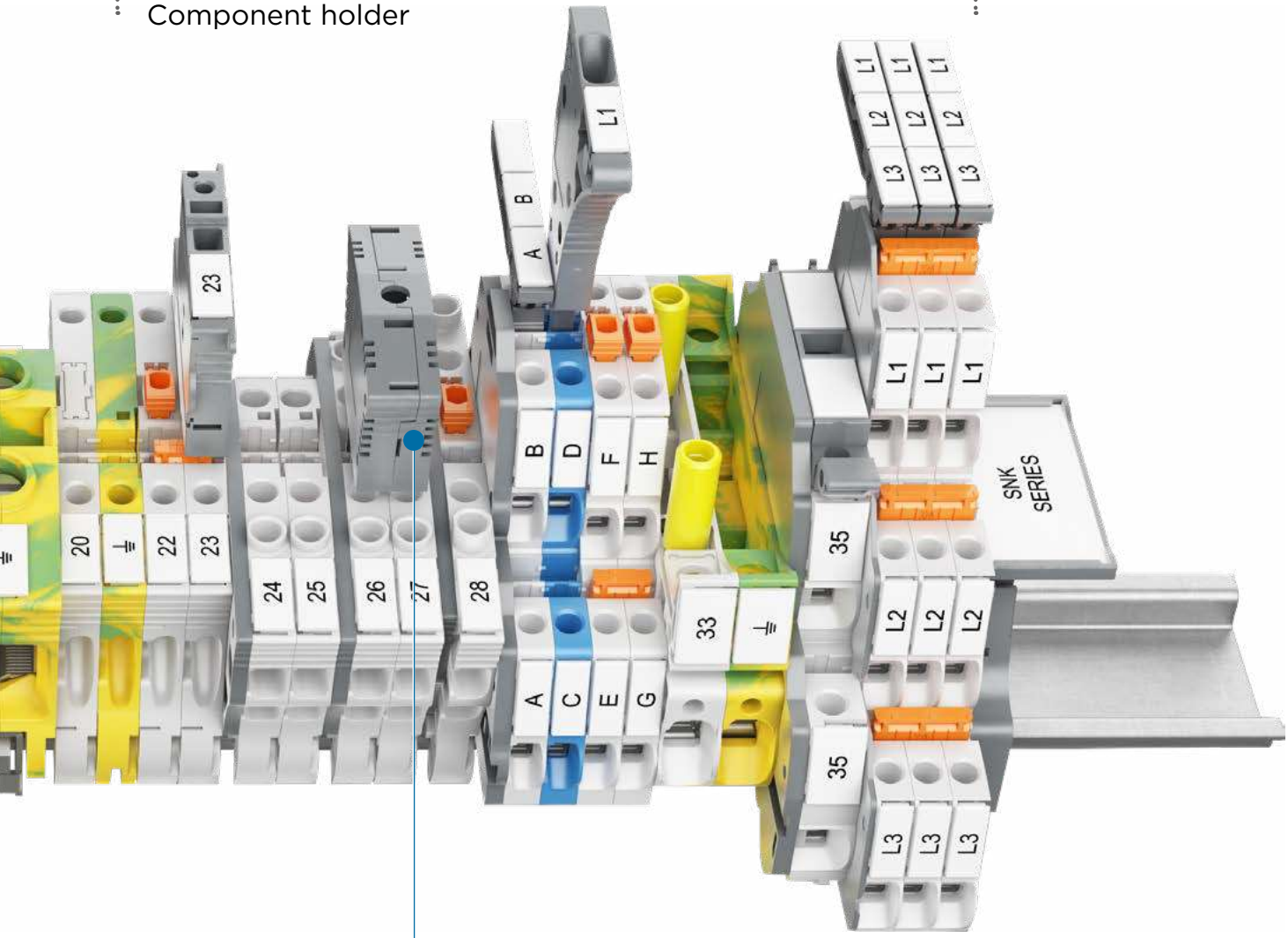

Plug
component holder

1SNK161089S0201

3

SNK series, terminal blocks
Screw clamp technology

Section		Feed-through					Ground			
4 mm²	12 AWG	ZS4					ZS4-PE			
	10 AWG									
6 mm²	10 AWG	ZS6	ZS6-3S	ZS6-4S			ZS6-PE	ZS6-3S-PE	ZS6-4S-PE	
10 mm²	6 AWG	ZS10					ZS10-PE			
16 mm²	4 AWG	ZS16					ZS16-PE			
25 mm²	3 AWG	ZS25					ZS25-PE			
35 mm²	0 AWG				ZS35					
	2 AWG									ZS35-PE
50 mm²	0 AWG				ZS50					ZS50-PE
70 mm²	00 AWG				ZS70					ZS70-PE
95 mm²	0000 AWG				ZS95					ZS95-PE
150 mm²	350 Kcmil					ZS150				
240 mm²	500 Kcmil					ZS240				

Section		Disconnect with blade					Disconnect with plug			
4 mm²	10 AWG	ZS4-S	ZS4-S-T2		ZS4-S-R1	ZS4-S-T2-R1	ZS4-SP	ZS4-SP-T2	ZS4-SP-R1	ZS4-SP-T2-R1
						ZS4-S-T2.3-R1				
6 mm²	10 AWG	ZS6-S		ZS6-S-4S-T2						
10 mm²	6 AWG	ZS10-S					ZS10-SP			

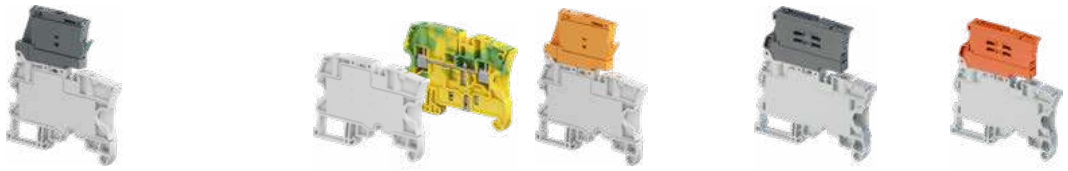

Section		For 5 x 20 mm fuses				Aligned for marshalling cabinets application			For 6.3 x 32 mm fuses (¼ x 1¼ in)		Aligned
4 mm²	10 AWG	ZS4-SF	ZS4-SF-T2	ZS4-SF-R1	ZS4-SF-R2	ZS4-R2	ZS4-PE-R2	ZS4-S-R2			
				ZS4-SF-R3	ZS4-SF-R4						
10 mm²	6 AWG								ZS10-SF	ZS10-SF-R1	ZS10-S-R2
										ZS10-SF-R3	

Clamp - Channels for jumpering or testing - Test socket - Blown-fuse indicator

1SNK161066S0201

Double deck										Triple deck
Feed-through		Ground		Disconnect with blade		For 5 x 20 mm and 5 x 25 mm fuses		Component holder		Feed-through
ZS4-D2	ZS4-D1							ZS4-D-CH-UD	ZS4-D-CH-DU	ZS4-T3
				ZS4-D2-S	ZS4-D2-S-T2	ZS4-D2-SF1	ZS4-D2-SF1-R1			ZS4-T3-R1
							ZS4-D2-SF-R3			
ZS6-D2	ZS6-D1	ZS6-D2-PE	ZS6-D1-PE							

Test & measurement			
Test disconnect with sliding link		Aligned with ZS10-ST	
ZS10-ST	ZS10-ST-T4	ZS10-R1	ZS10-PE-R1
	ZS10-ST-1		

For 5 x 20 mm and 5 x 25 mm fuses				Feed-through aligned with ZS4-SF1	
ZS4-SF1	ZS4-SF1-T2	ZS4-SF1-R1	ZS4-SF1-R2	ZS4-R1	ZS4-S-R3
		ZS4-SF1-R3	ZS4-SF1-R4		

1SNK161066S0201

ZS4 screw clamp terminal blocks
Feed-through - 5.2 mm 0.205 in spacing

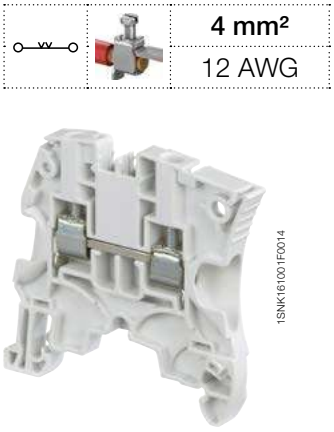

4 mm²	
12 AWG	

1SNK161001F0014

ZS4

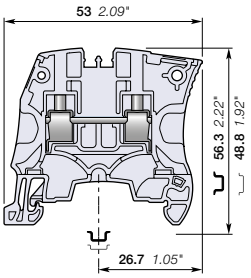

5.2 mm 0.205 in spacing

Description

- Save space by connecting conductors up to 4 mm² (without insulated ferrule, CB certified) 12 AWG in just 5.2 mm 0.205 in spacing,
- Perfectly adapted to solar applications: voltage is rated 1000 V AC / DC IEC.

Ordering details

Description	Color	Type	Part Number		Pkg qty	Weight (1 pce) g
Feed-through	Grey	ZS4	1SNK505010R0000		50	8.80
	Blue	ZS4-BL	1SNK505020R0000		50	8.80
	Orange	ZS4-OR	1SNK505030R0000		50	8.80
	Yellow	ZS4-YL	1SNK505060R0000		50	8.80
	Green	ZS4-GN	1SNK505061R0000		50	8.80
	Red	ZS4-RD	1SNK505062R0000		50	8.80
	Purple	ZS4-PR	1SNK505063R0000		50	8.80
	Brown	ZS4-BR	1SNK505064R0000		50	8.80
	White	ZS4-WH	1SNK505065R0000		50	8.80
	Black	ZS4-BK	1SNK505066R0000		50	8.80

Main technical data

Connecting capacity		IEC	UL - CSA
1 conductor per clamp	Rigid - Solid / Stranded	0.2 ... 4 mm²	24 ... 12 AWG
	Flexible	0.22 ... 4 mm²	
	with non insulated ferrule	0.22 ... 4 mm²	24 ... 12 AWG
	with insulated ferrule	0.22 ... 2.5 mm²	24 ... 14 AWG
	Gauge	A3-B3	
2 conductors per clamp	Rigid - Solid / Stranded	0.2 ... 1.5 mm²	24 ... 16 AWG
	Flexible	0.2 ... 1.5 mm²	
	with twin ferrule	0.22 ... 1.5 mm²	24 ... 16 AWG
Rated current / Rated cross section		32 A / 4 mm²	20 A / 12 AWG
Rated short-time withstand current (1s)		480 A	
Short Circuit Current Rating (with specific conditions)			100 kA
Rated voltage		1000 V	600 V
Impulse withstand voltage		8000 V	
Protection		IP20	NEMA 1
Increased safety Ex e		693 V 32 A IEC/EN 60079-7 - IM2 II 2 GD Ex eb I/II/IIIC – 600 V 20 A UL 60079-7 - Class I, Zone 1, AEx e II, Ex e II U	

Mounting instructions

Rail	TH 35-7.5, TH 35-15
Wire stripping length	10.5 mm 0.412 in
Tool	Flat screwdriver Ø 3.5 mm Ø 0.138 in
Torque	0.6 Nm ± 0.1 5.31 lb.in ± 0.885

The connecting capacity data for one Rigid - Solid / Stranded - Flexible conductor (when applicable) is a mandatory information required by IEC, UL and CSA standards (Copper conductors). All other data are provided as supplementary information only. For more details, please consult our CB, UL or CSA certificates and technical datasheet available on http://www.TE.com

CE, CB, RoHS, USR CNR, CSA, EAC Ex, ATEX, IECEx, BR-Ex e II, Haz Loc, BV, DNV, Rina

Accessories

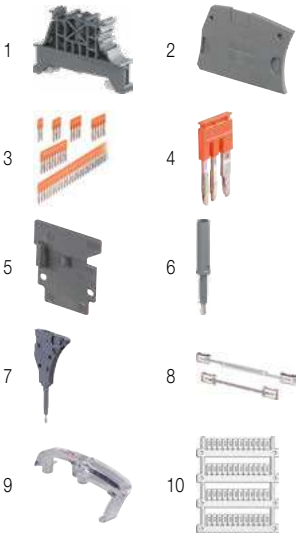

	Description			Color	Type	Part Number		Pkg qty	Weight (1 pce) g
1	**End stops**	10 mm	0.394 in	Dark grey	BAM4	1SNK900001R0000		50	14.00
2	**End sections**	2.2 mm	0.087 in	Dark grey	ES4	1SNK505910R0000		20	2.20
3	**Jumper bars**	2 poles	32 A (IEC)	Orange	JB5-2	1SNK905302R0000		50	1.30
		3 poles	32 A (IEC)		JB5-3	1SNK905303R0000		50	2.00
		4 poles	32 A (IEC)		JB5-4	1SNK905304R0000		50	2.70
		5 poles	32 A (IEC)		JB5-5	1SNK905305R0000		50	3.50
		10 poles	32 A (IEC)		JB5-10	1SNK905310R0000		30	7.10
		50 poles	32 A (IEC)		JB5-50	1SNK905350R0000		10	36.00
4	**Cross spacing jumpers**	3 poles	32 A (IEC)	Orange	JB85-3	1SNK900603R0000		10	2.80
5	**Circuit separators**	0 mm	0 in	Dark grey	CS	1SNK900101R0000		20	0.20
		3 mm	0.118 in		CS-R1	1SNK900103R0000		20	5.20
6	**Test adapters**	For test plugs DIA 2 mm 0.079 in		Dark grey	TP2	1SNK900203R0000		20	1.70
		For test plugs DIA 4 mm 0.157 in			TP4	1SNK900205R0000		20	2.40
7	**Test connectors**	5.2 mm 0.205 in spacing		Dark grey	TC5	1SNK900200R0000		10	5.20
		End module, 5.2 mm 0.205 in			TC5-R1	1SNK900201R0000		10	5.20
8	**Shield connectors**				SHBS	1SNK900600R0000		20	3.50
9	**Protecting covers**	5.2 mm 0.205 in spacing		Transparent	PL5	1SNK900618R0000		10	1.50
10	**Terminal block markers**	Blank marker		White	MG-CPM 13 41790	1SNB041790R0512		1960	0.23
		Blank card			MC512	1SNK140000R0000		22	9.00
					MC512PA	1SNK149999R0000		20	10.00
		Universal wire markers holder		Grey	UMH	1SNK900611R0000		10	0.20

Complete list of accessories is indicated in the terminal block datasheet including end stops.
Some accessories such as jumper bars may modify the terminal block's ratings: Complete information available in the accessories section of the catalog.

Ground screw clamp terminal blocks

Description		Color	Type	Part Number		Pkg qty	Weight (1 pce) g
Ground	Profile aligned with ZS4	Green-yellow	ZS4-PE	1SNK505150R0000		20	12.10

1SNK161001S0201

Technical data valid for copper conductors only.

ZS6 screw clamp terminal blocks
Feed-through - 6 mm 0.236 in spacing

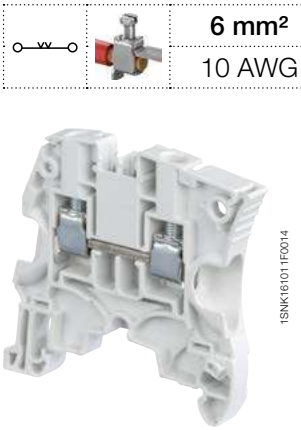

ZS6

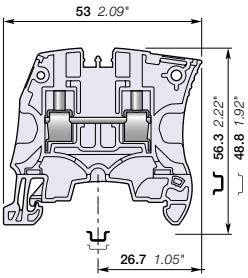

6 mm 0.236 in spacing

	6 mm²
	10 AWG

Description

Save space by connecting conductors up to 6 mm² (without insulated ferrule, CB certified) 10 AWG in just 6 mm 0.236 in spacing,

– Perfectly adapted to solar applications: voltage is rated 1000 V AC / DC IEC.

Ordering details

Description	Color	Type	Part Number		Pkg qty	Weight (1 pce) g
Feed-through	Grey	ZS6	1SNK506010R0000		50	10.60
	Blue	ZS6-BL	1SNK506020R0000		50	10.60
	Orange	ZS6-OR	1SNK506030R0000		50	10.60
	Yellow	ZS6-YL	1SNK506060R0000		50	10.60
	Green	ZS6-GN	1SNK506061R0000		50	10.60
	Red	ZS6-RD	1SNK506062R0000		50	10.60
	Purple	ZS6-PR	1SNK506063R0000		50	10.60
	Brown	ZS6-BR	1SNK506064R0000		50	10.60
	White	ZS6-WH	1SNK506065R0000		50	10.60
	Black	ZS6-BK	1SNK506066R0000		50	10.60

Main technical data

Connecting capacity		IEC	UL - CSA
1 conductor per clamp	Rigid - Solid / Stranded	0.2 ... 6 mm²	24 ... 10 AWG
	Flexible	0.2 ... 6 mm²	
	with non insulated ferrule	0.22 ... 4 mm²	24 ... 12 AWG
	with insulated ferrule	0.22 ... 4 mm²	24 ... 12 AWG
	Gauge	A4-B3	
2 conductors per clamp	Rigid - Solid / Stranded	0.2 ... 2.5 mm²	24 ... 14 AWG
	Flexible	0.2 ... 2.5 mm²	
	with twin ferrule	0.22 ... 2.5 mm²	24 ... 14 AWG
Rated current / Rated cross section		41 A / 6 mm²	30 A / 10 AWG
Rated short-time withstand current (1s)		720 A	
Short Circuit Current Rating (with specific conditions)			100 kA
Rated voltage		1000 V	600 V
Impulse withstand voltage		8000 V	
Protection		IP20	NEMA 1
Increased safety Ex e		693 V 41 A IEC/EN 60079-7 - IM2 II 2 GD Ex eb I/II/IIIC – 600 V 30 A UL 60079-7 - Class I, Zone 1, AEx e II, Ex e II U	

Mounting instructions

Rail	TH 35-7.5, TH 35-15
Wire stripping length	10.5 mm 0.412 in
Tool	Flat screwdriver Ø 4 mm Ø 0.157 in
Torque	0.85 Nm ± 0.15 7.52 lb.in ± 1.33

The connecting capacity data for one Rigid - Solid / Stranded - Flexible conductor (when applicable) is a mandatory information required by IEC, UL and CSA standards (Copper conductors). All other data are provided as supplementary information only. For more details, please consult our CB, UL or CSA certificates and technical datasheet available on http://www.TE.com

CE, CB, RoHS, USR CNR, CSA, EAC Ex, ATEX, IECEx, BR-Ex e II, Haz Loc, BV, DNV, Rina

Accessories

	Description			Color	Type	Part Number		Pkg qty	Weight (1 pce) g
1	**End stops**	10 mm	0.394 in	Dark grey	BAM4	1SNK900001R0000		50	14.00
2	**End sections**	2.2 mm	0.087 in	Dark grey	ES4	1SNK505910R0000		20	2.20
3	**Jumper bars**	2 poles	41 A (IEC)	Orange	JB6-2	1SNK906302R0000		50	1.30
		3 poles	41 A (IEC)		JB6-3	1SNK906303R0000		50	2.10
		4 poles	41 A (IEC)		JB6-4	1SNK906304R0000		50	2.90
		5 poles	41 A (IEC)		JB6-5	1SNK906305R0000		50	3.60
		10 poles	41 A (IEC)		JB6-10	1SNK906310R0000		20	7.40
		50 poles	41 A (IEC)		JB6-50	1SNK906350R0000		10	38.10
4	**Cross spacing jumpers**	3 poles	32 A (IEC)	Orange	JB85-3	1SNK900603R0000		10	2.80
5	**Circuit separators**	0 mm	0 in	Dark grey	CS	1SNK900101R0000		20	0.20
		3 mm	0.118 in		CS-R1	1SNK900103R0000		20	5.20
6	**Test adapters**	For test plugs DIA 2 mm 0.079 in		Dark grey	TP2	1SNK900203R0000		20	1.70
		For test plugs DIA 4 mm 0.157 in			TP4	1SNK900205R0000		20	2.40
7	**Test connectors**	End module, 5.2 mm 0.205 in		Dark grey	TC5-R1	1SNK900201R0000		10	5.20
8	**Spacers**	0.8 mm	0.031 in	Dark grey	ES-TC6	1SNK900105R0000		10	0.80
9	**Shield connectors**				SHBS	1SNK900600R0000		20	3.50
10	**Protecting covers**	6 mm 0.236 in spacing		Transparent	PL6	1SNK900619R0000		10	1.80
11	**Terminal block markers**	Blank marker		White	MG-CPM 13 41791	1SNB041791R0612		1680	0.27
		Blank card			MC612	1SNK150000R0000		22	10.00
					MC612PA	1SNK159999R0000		20	11.00
		Universal wire markers holder		Grey	UMH	1SNK900611R0000		10	0.20

Complete list of accessories is indicated in the terminal block datasheet including end stops.
Some accessories such as jumper bars may modify the terminal block's ratings: Complete information available in the accessories section of the catalog.

Ground screw clamp terminal blocks

Description		Color	Type	Part Number		Pkg qty	Weight (1 pce) g
Ground	Profile aligned with ZS6	Green-yellow	ZS6-PE	1SNK506150R0000		20	13.70

Technical data valid for copper conductors only.

1SNK161008S0201

3

ZS6-3S screw clamp terminal blocks

Feed-through with 3 connections - 6 mm 0.236 in spacing

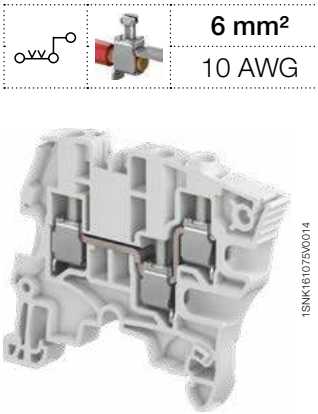

6 mm²
10 AWG

1SNK161075V0014

ZS6-3S

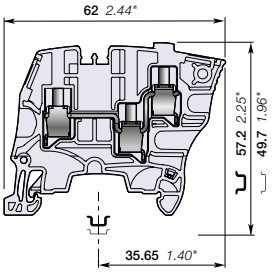

6 mm 0.236 in spacing

Description

- Recommended for energy markets and highly demanding applications requiring that only one conductor be connected per clamp,
- These blocks offer a high density connecting capacity (up to 3 connections) in a low profile and just 6 mm 0.236 in spacing.

Ordering details

Description	Color	Type	Part Number		Pkg qty	Weight (1 pce) g
Feed-through	Grey	ZS6-3S	1SNK506011R0000		50	11.80
	Blue	ZS6-3S-BL	1SNK506021R0000		50	11.80
	Yellow	ZS6-3S-YL	1SNK506067R0000		50	11.80

Main technical data

Connecting capacity		IEC	UL - CSA
1 conductor per clamp	Rigid - Solid / Stranded	0.2 ... 6 mm²	24 ... 10 AWG
	Flexible	0.22... 6 mm²	
	with non insulated ferrule	0.22 ... 4 mm²	24 ... 12 AWG
	with insulated ferrule	0.22 ... 4 mm²	24 ... 12 AWG
	Gauge	A4-B3	
2 conductors per clamp	Rigid - Solid / Stranded	0.2 ... 2.5 mm²	24 ... 14 AWG
	Flexible	0.2 ... 2.5 mm²	
	with twin ferrule	0.22 ... 2.5 mm²	24 ... 14 AWG
Rated current / Rated cross section		32 A / 4 mm²	30 A / 10 AWG
Maximum current / Maximum cross section		39 A / 6 mm²	
Rated short-time withstand current (1s)		480 A	
Short Circuit Current Rating (with specific conditions)			100 kA
Rated voltage		800 V	600 V
Impulse withstand voltage		8000 V	
Protection		IP20	NEMA 1
Increased safety Ex e		550 V 29 A IEC/EN 60079-7 - IM2 II 2 GD Ex eb I/II/IIIC – 600 V 30 A	

Mounting instructions

Rail	TH 35-7.5, TH 35-15
Wire stripping length	10.5 mm 0.413 in
Tool	Flat screwdriver Ø 4 mm Ø 0.157 in
Torque	0.75 Nm ± 0.05 6.64 lb.in ± 0.443

The connecting capacity data for one Rigid - Solid / Stranded - Flexible conductor (when applicable) is a mandatory information required by IEC, UL and CSA standards (Copper conductors). All other data are provided as supplementary information only. For more details, please consult our CB, UL or CSA certificates and technical datasheet available on http://www.TE.com

CE, CB, RoHS, USR, CSA, EAC Ex, ATEX, IECEx, BR-Ex e II, Haz Loc, BV, DNV

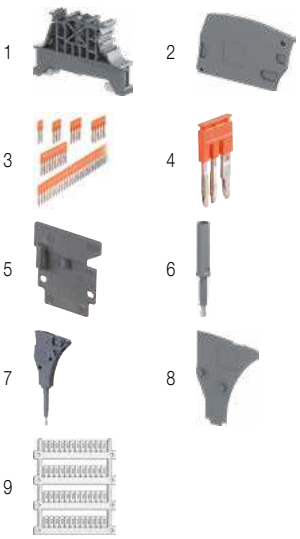

Accessories

	Description			Color	Type	Part Number		Pkg qty	Weight (1 pce) g
1	End stops	10 mm	0.394 in	Dark grey	BAM4	1SNK900001R0000		50	14.00
2	End sections	2.2 mm	0.087 in	Dark grey	ES6-3S	1SNK505912R0000		20	2.50
3	Jumper bars	2 poles	41 A (IEC)	Orange	JB6-2	1SNK906302R0000		50	1.30
		3 poles	41 A (IEC)		JB6-3	1SNK906303R0000		50	2.10
		4 poles	41 A (IEC)		JB6-4	1SNK906304R0000		50	2.90
		5 poles	41 A (IEC)		JB6-5	1SNK906305R0000		50	3.60
		10 poles	41 A (IEC)		JB6-10	1SNK906310R0000		20	7.40
		50 poles	41 A (IEC)		JB6-50	1SNK906350R0000		10	38.10
4	Cross spacing jumpers	3 poles	32 A (IEC)	Orange	JB85-3	1SNK900603R0000		10	2.80
5	Circuit separators	0 mm	0 in	Dark grey	CS	1SNK900101R0000		20	0.20
		3 mm	0.118 in		CS-R1	1SNK900103R0000		20	5.20
6	Test adapters	For test plugs DIA 2 mm 0.079 in		Dark grey	TP2	1SNK900203R0000		20	1.70
		For test plugs DIA 4 mm 0.157 in			TP4	1SNK900205R0000		20	2.40
7	Test connectors	End module, 5.2 mm 0.205 in		Dark grey	TC5-R1	1SNK900201R0000		10	5.20
8	Spacers	0.8 mm	0.031 in	Dark grey	ES-TC6	1SNK900105R0000		10	0.80
9	Terminal block markers	Blank marker		White	MG-CPM 13 41791	1SNB041791R0612		1680	0.27
		Blank card			MC612	1SNK150000R0000		22	10.00
					MC612PA	1SNK159999R0000		20	11.00
		Universal wire markers holder		Grey	UMH	1SNK900611R0000		10	0.20

Complete list of accessories is indicated in the terminal block datasheet including end stops.
Some accessories such as jumper bars may modify the terminal block's ratings: Complete information available in the accessories section of the catalog.

Ground screw clamp terminal blocks

Description		Color	Type	Part Number		Pkg qty	Weight (1 pce) g
Ground	Profile aligned with ZS6-3S	Green-yellow	ZS6-3S-PE	1SNK506151R0000		25	16.20

1SNK161067S0201

Technical data valid for copper conductors only.

ZS6-4S screw clamp terminal blocks

Feed-through with 4 connections - 6 mm 0.236 in spacing

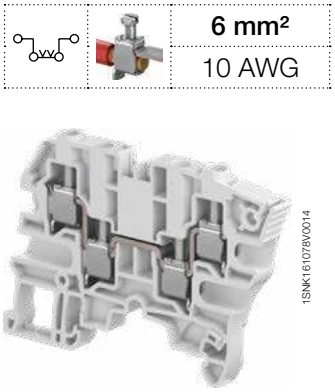

6 mm²
10 AWG

1SNK161078V0014

ZS6-4S

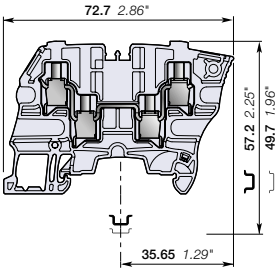

6 mm 0.236 in spacing

Description

- High density wiring (one potential distribution on 4 independent screw clamps) in a very low profile and just 6 mm 0.236 in spacing,
- Recommended for energy markets and highly demanding applications requiring that only one conductor be connected per clamp.

Ordering details

Description	Color	Type	Part Number		Pkg qty	Weight (1 pce) g
Feed-through	Grey	ZS6-4S	1SNK506012R0000		50	15.00
	Blue	ZS6-4S-BL	1SNK506022R0000		50	15.00
	Yellow	ZS6-4S-YL	1SNK506068R0000		50	15.00

Main technical data

Connecting capacity		IEC	UL - CSA
1 conductor per clamp	Rigid - Solid / Stranded	0.2 ... 6 mm²	24 ... 10 AWG
	Flexible	0.22... 6 mm²	
	with non insulated ferrule	0.22 ... 4 mm²	24 ... 12 AWG
	with insulated ferrule	0.22 ... 4 mm²	24 ... 12 AWG
	Gauge	A4-B3	
2 conductors per clamp	Rigid - Solid / Stranded	0.2 ... 2.5 mm²	24 ... 14 AWG
	Flexible	0.2 ... 2.5 mm²	
	with twin ferrule	0.22 ... 2.5 mm²	24 ... 14 AWG
Rated current / Rated cross section		32 A / 4 mm²	30 A / 10 AWG
Maximum current / Maximum cross section		39 A / 6 mm²	
Rated short-time withstand current (1s)		480 A	
Short Circuit Current Rating (with specific conditions)			100 kA
Rated voltage		800 V	600 V
Impulse withstand voltage		8000 V	
Protection		IP20	NEMA 1
Increased safety Ex e		550 V 29 A IEC/EN 60079-7 - IM2 II 2 GD Ex eb I/II/IIIC – 600 V 30 A	

Mounting instructions

Rail	TH 35-7.5, TH 35-15
Wire stripping length	10.5 mm 0.413 in
Tool	Flat screwdriver Ø 4 mm Ø 0.157 in
Torque	0.75 Nm ± 0.05 6.64 lb.in ± 0.443

The connecting capacity data for one Rigid - Solid / Stranded - Flexible conductor (when applicable) is a mandatory information required by IEC, UL and CSA standards (Copper conductors). All other data are provided as supplementary information only. For more details, please consult our CB, UL or CSA certificates and technical datasheet available on http://www.TE.com

CE, CB, RoHS, USR, CSA, EAC Ex, ATEX, IECEx, BR-Ex e II, Haz Loc, BV, DNV

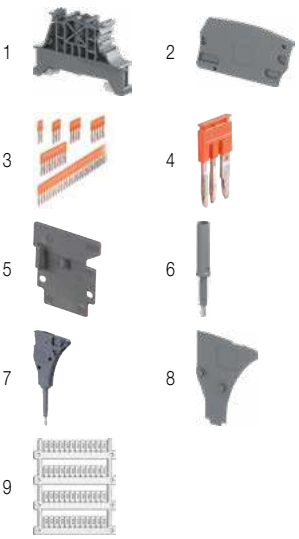

Accessories

	Description			Color	Type	Part Number		Pkg qty	Weight (1 pce) g
1	End stops	10 mm	0.394 in	Dark grey	BAM4	1SNK900001R0000		50	14.00
2	End sections	2.2 mm	0.087 in	Dark grey	ES6-4S	1SNK505911R0000		20	3.10
3	Jumper bars	2 poles	41 A (IEC)	Orange	JB6-2	1SNK906302R0000		50	1.30
		3 poles	41 A (IEC)		JB6-3	1SNK906303R0000		50	2.10
		4 poles	41 A (IEC)		JB6-4	1SNK906304R0000		50	2.90
		5 poles	41 A (IEC)		JB6-5	1SNK906305R0000		50	3.60
		10 poles	41 A (IEC)		JB6-10	1SNK906310R0000		20	7.40
		50 poles	41 A (IEC)		JB6-50	1SNK906350R0000		10	38.10
4	Cross spacing jumpers	3 poles	32 A (IEC)	Orange	JB85-3	1SNK900603R0000		10	2.80
5	Circuit separators	0 mm	0 in	Dark grey	CS	1SNK900101R0000		20	0.20
		3 mm	0.118 in		CS-R1	1SNK900103R0000		20	5.20
6	Test adapters	For test plugs DIA 2 mm 0.079 in		Dark grey	TP2	1SNK900203R0000		20	1.70
		For test plugs DIA 4 mm 0.157 in			TP4	1SNK900205R0000		20	2.40
7	Test connectors	End module, 5.2 mm 0.205 in		Dark grey	TC5-R1	1SNK900201R0000		10	5.20
8	Spacers	0.8 mm	0.031 in	Dark grey	ES-TC6	1SNK900105R0000		10	0.80
9	Terminal block markers	Blank marker		White	MG-CPM 13 41791	1SNB041791R0612		1680	0.27
		Blank card			MC612	1SNK150000R0000		22	10.00
					MC612PA	1SNK159999R0000		20	11.00
		Universal wire markers holder		Grey	UMH	1SNK900611R0000		10	0.20

Complete list of accessories is indicated in the terminal block datasheet including end stops.
Some accessories such as jumper bars may modify the terminal block's ratings: Complete information available in the accessories section of the catalog.

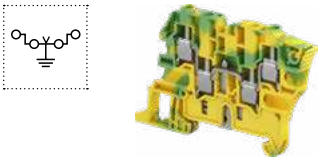

Ground screw clamp terminal blocks

Description		Color	Type	Part Number		Pkg qty	Weight (1 pce) g
Ground	Profile aligned with ZS6-4S	Green-yellow	ZS6-4S-PE	1SNK506152R0000		25	19.40

1SNK161068S0201

Technical data valid for copper conductors only.

ZS10 screw clamp terminal blocks
Feed-through - 8 mm 0.315 in spacing

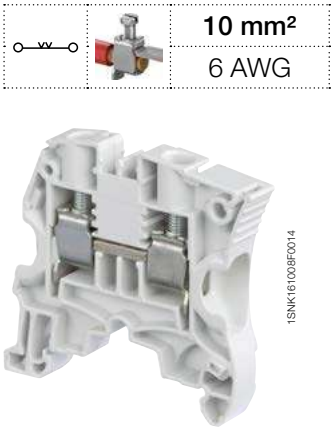

10 mm²	
6 AWG	

1SNK161009R0014

ZS10

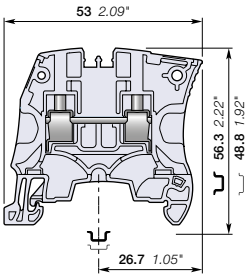

8 mm 0.315 in spacing

Description

- Save space by connecting conductors up to 10 mm² (without insulated ferrule, CB certified) 6 AWG in just 8 mm 0.315 in spacing,
- Perfectly adapted to solar applications: voltage is rated 1000 V AC / DC IEC.

Ordering details

Description	Color	Type	Part Number		Pkg qty	Weight (1 pce) g
Feed-through	Grey	ZS10	1SNK508010R0000		50	14.10
	Blue	ZS10-BL	1SNK508020R0000		50	14.10
	Orange	ZS10-OR	1SNK508030R0000		50	14.10
	Yellow	ZS10-YL	1SNK508060R0000		50	14.10
	Green	ZS10-GN	1SNK508061R0000		50	14.10
	Red	ZS10-RD	1SNK508062R0000		50	14.10
	Purple	ZS10-PR	1SNK508063R0000		50	14.10
	Brown	ZS10-BR	1SNK508064R0000		50	14.10
	White	ZS10-WH	1SNK508065R0000		50	14.10
	Black	ZS10-BK	1SNK508066R0000		50	14.10

Main technical data

Connecting capacity		IEC	UL - CSA
1 conductor per clamp	Rigid - Solid / Stranded	0.5 ... 10 mm²	24 ... 6 AWG
	Flexible	0.5 ... 10 mm²	
	with non insulated ferrule	0.5 ... 10 mm²	24 ... 8 AWG
	with insulated ferrule	0.5 ... 6 mm²	24 ... 10 AWG
	Gauge	A5-B5	
2 conductors per clamp	Rigid - Solid / Stranded	0.5 ... 4 mm²	20 ... 12 AWG
	Flexible	0.5 ... 4 mm²	
	with twin ferrule	0.5 ... 4 mm²	20 ... 12 AWG
Rated current / Rated cross section		57 A / 10 mm²	42 A / 6 AWG
Rated short-time withstand current (1s)		1200 A	
Short Circuit Current Rating (with specific conditions)			100 kA
Rated voltage		1000 V	600 V
Impulse withstand voltage		8000 V	
Protection		IP20	NEMA 1
Increased safety Ex e		693 V 57 A IEC/EN 60079-7 - IM2 II 2 GD Ex eb I/II/IIIC – 600 V 42 A UL 60079-7 - Class I, Zone 1, AEx e II, Ex e II U	

The connecting capacity data for one Rigid - Solid / Stranded - Flexible conductor (when applicable) is a mandatory information required by IEC, UL and CSA standards (Copper conductors). All other data are provided as supplementary information only. For more details, please consult our CB, UL or CSA certificates and technical datasheet available on http://www.TE.com

CE, CB, RoHS, USR CNR, CSA, EAC Ex, ATEX, IECEx, BR-Ex e II, Haz Loc, BV, DNV, Rina

Mounting instructions

Rail	TH 35-7.5, TH 35-15
Wire stripping length	12 mm 0.472 in
Tool	Flat screwdriver Ø 4 mm Ø 0.157 in
Torque	1.3 Nm ± 0.3 11.5 lb.in ± 2.65

Accessories

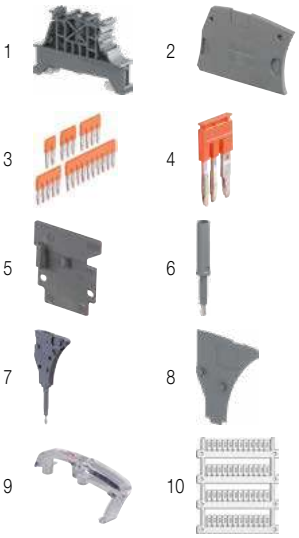

	Description			Color	Type	Part Number		Pkg qty	Weight (1 pce) g
1	End stops	10 mm	0.394 in	Dark grey	BAM4	1SNK900001R0000		50	14.00
2	End sections	2.2 mm	0.087 in	Dark grey	ES4	1SNK505910R0000		20	2.20
3	Jumper bars	2 poles	57 A (IEC)	Orange	JB8-2	1SNK908302R0000		50	2.70
		3 poles	57 A (IEC)		JB8-3	1SNK908303R0000		50	4.10
		4 poles	57 A (IEC)		JB8-4	1SNK908304R0000		50	5.60
		5 poles	57 A (IEC)		JB8-5	1SNK908305R0000		40	7.00
		10 poles	57 A (IEC)		JB8-10	1SNK908310R0000		20	14.20
4	Cross spacing jumpers	3 poles	32 A (IEC)	Orange	JB85-3	1SNK900603R0000		10	2.80
5	Circuit separators	0 mm	0 in	Dark grey	CS	1SNK900101R0000		20	0.20
		3 mm	0.118 in		CS-R1	1SNK900103R0000		20	5.20
6	Test adapters	For test plugs DIA 2 mm 0.079 in		Dark grey	TP2	1SNK900203R0000		20	1.70
		For test plugs DIA 4 mm 0.157 in			TP4	1SNK900205R0000		20	2.40
7	Test connectors	5.2 mm 0.205 in spacing		Dark grey	TC5	1SNK900200R0000		10	5.20
		End module, 5.2 mm 0.205 in			TC5-R1	1SNK900201R0000		10	5.20
8	Spacers	2.8 mm	0.110 in	Dark grey	ES-TC8	1SNK900104R0000		10	1.40
9	Protecting covers	8 mm 0.315 in spacing		Transparent	PL8	1SNK900620R0000		10	2.60
10	Terminal block markers	Blank marker		White	MG-CPM 13 41791	1SNB041791R0612		1680	0.27
		Blank card			MC812	1SNK160000R0000		22	10.00
					MC812PA	1SNK169999R0000		20	14.00
		Universal wire markers holder		Grey	UMH	1SNK900611R0000		10	0.20

Complete list of accessories is indicated in the terminal block datasheet including end stops.
Some accessories such as jumper bars may modify the terminal block's ratings: Complete information available in the accessories section of the catalog.

Ground screw clamp terminal blocks

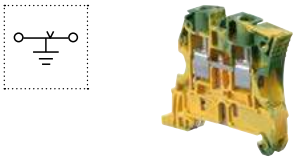

Description		Color	Type	Part Number		Pkg qty	Weight (1 pce) g
Ground	Profile aligned with ZS10	Green-yellow	ZS10-PE	1SNK508150R0000		20	22.50

1SNK161004S0201

Technical data valid for copper conductors only.

ZS16 screw clamp terminal blocks
Feed-through - 10 mm 0.394 in spacing

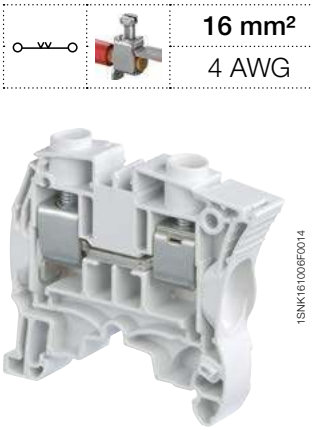

16 mm²
4 AWG

1SNK161006F0014

ZS16

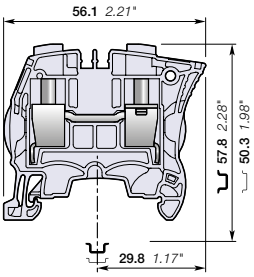

10 mm 0.394 in spacing

Description

- Save space by connecting conductors up to 16 mm² (without insulated ferrule, CB certified) 4 AWG in just 10 mm 0.394 in spacing,
- Perfectly adapted to solar applications: voltage is rated 1000 V AC / DC IEC.

Ordering details

Description	Color	Type	Part Number		Pkg qty	Weight (1 pce) g
Feed-through	Grey	ZS16	1SNK510010R0000		25	20.20
	Blue	ZS16-BL	1SNK510020R0000		25	20.20
	Orange	ZS16-OR	1SNK510030R0000		25	20.20

Main technical data

Connecting capacity		IEC	UL - CSA
1 conductor per clamp	Rigid - Solid / Stranded	0.5 ... 16 mm²	24 ... 4 AWG
	Flexible	0.5 ... 16 mm²	
	with non insulated ferrule	0.5 ... 16 mm²	24 ... 4 AWG
	with insulated ferrule	0.5 ... 10 mm²	24 ... 8 AWG
	Gauge	A6-B6	
2 conductors per clamp	Rigid - Solid / Stranded	0.5 ... 6 mm²	20 ... 10 AWG
	Flexible	0.5 ... 6 mm²	
	with twin ferrule	0.5 ... 6 mm²	20 ... 10 AWG
Rated current / Rated cross section		76 A / 16 mm²	67 A / 4 AWG
Rated short-time withstand current (1s)		1920 A	
Short Circuit Current Rating (with specific conditions)			100 kA
Rated voltage		1000 V	600 V
Impulse withstand voltage		8000 V	
Protection		IP20	NEMA 1
Increased safety Ex e		693 V 76 A IEC/EN 60079-7 - IM2 II 2 GD Ex eb I/II/IIIC – 600 V 67 A UL 60079-7 - Class I, Zone 1, AEx e II, Ex e II U	

Mounting instructions

Rail	TH 35-7.5, TH 35-15
Wire stripping length	13.5 mm 0.531 in
Tool	Flat screwdriver Ø 5.5 mm Ø 0.217 in
Torque	1.8 Nm ± 0.2 15.9 lb.in ± 1.77

The connecting capacity data for one Rigid - Solid / Stranded - Flexible conductor (when applicable) is a mandatory information required by IEC, UL and CSA standards (Copper conductors). All other data are provided as supplementary information only. For more details, please consult our CB, UL or CSA certificates and technical datasheet available on http://www.TE.com

CE, CB, RoHS, USR CNR, CSA, EAC Ex, ATEX, IECEx, BR-Ex e II, Haz Loc, BV, DNV, Rina

3

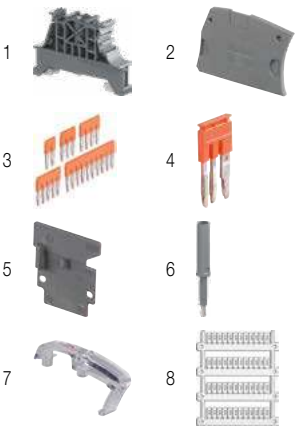

Accessories

	Description			Color	Type	Part Number		Pkg qty	Weight (1 pce) g
1	End stops	10 mm	0.394 in	Dark grey	BAM4	1SNK900001R0000		50	14.00
2	End sections	2.2 mm	0.087 in	Dark grey	ES4	1SNK505910R0000		20	2.20
3	Jumper bars	2 poles	76 A (IEC)	Orange	JB10-2	1SNK910302R0000		50	4.60
		3 poles	76 A (IEC)		JB10-3	1SNK910303R0000		50	7.10
		4 poles	76 A (IEC)		JB10-4	1SNK910304R0000		40	9.40
		5 poles	76 A (IEC)		JB10-5	1SNK910305R0000		30	12.00
		10 poles	76 A (IEC)		JB10-10	1SNK910310R0000		20	24.00
4	Cross spacing jumpers	3 poles	32 A (IEC)	Orange	JB85-3	1SNK900603R0000		10	2.80
5	Circuit separators	0 mm	0 in	Dark grey	CS	1SNK900101R0000		20	0.20
		3 mm	0.118 in		CS-R1	1SNK900103R0000		20	5.20
6	Test adapters	For test plugs DIA 2 mm 0.079 in		Dark grey	TP2	1SNK900203R0000		20	1.70
		For test plugs DIA 4 mm 0.157 in			TP4	1SNK900205R0000		20	2.40
7	Protecting covers	10 mm 0.394 in spacing		Transparent	PL10	1SNK900621R0000		10	3.10
8	Terminal block markers	Blank marker		White	MG-CPM 13 41791	1SNB041791R0612		1680	0.27
		Blank card			MC812	1SNK160000R0000		22	10.00
					MC812PA	1SNK169999R0000		20	14.00
		Universal wire markers holder		Grey	UMH	1SNK900611R0000		10	0.20

Complete list of accessories is indicated in the terminal block datasheet including end stops.
Some accessories such as jumper bars may modify the terminal block's ratings: Complete information available in the accessories section of the catalog.

Ground screw clamp terminal blocks

Description		Color	Type	Part Number		Pkg qty	Weight (1 pce) g
Ground	Profile aligned with ZS16	Green-yellow	ZS16-PE	1SNK510150R0000		20	32.00

1SNK161017S0201

Technical data valid for copper conductors only.

ZS25 screw clamp terminal blocks
Feed-through - 12 mm 0.472 in spacing

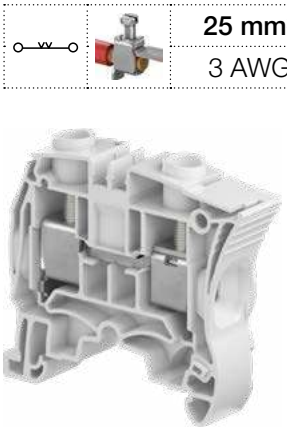

25 mm²
3 AWG

1SNK161081V0014

ZS25

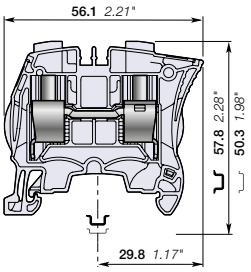

12 mm 0.472 in spacing

Description

- Save space by connecting conductors up to 25 mm² (without insulated ferrule, CB certified) 3 AWG in just 12 mm 0.472 in spacing,
- Perfectly adapted to solar applications: voltage is rated 1000 V AC / DC IEC.

Ordering details

Description	Color	Type	Part Number		Pkg qty	Weight (1 pce) g
Feed-through	Grey	ZS25	1SNK512010R0000		25	21.40
	Blue	ZS25-BL	1SNK512020R0000		25	21.40
	Yellow	ZS25-YL	1SNK512060R0000		25	21.40

Main technical data

Connecting capacity		IEC	UL - CSA
1 conductor per clamp	Rigid - Solid / Stranded	0.5 ... 25 mm²	24 ... 3 AWG
	Flexible	0.5 ... 25 mm²	
	with non insulated ferrule	0.5 ... 16 mm²	24 ... 4 AWG
	with insulated ferrule	0.5 ... 16 mm²	24 ... 8 AWG
	Gauge	A6-B6	
2 conductors per clamp	Rigid - Solid / Stranded	0.5 ... 10 mm²	20 ... 10 AWG
	Flexible	0.5 ... 10 mm²	
	with twin ferrule	0.5 ... 10 mm²	20 ... 10 AWG
Rated current / Rated cross section		76 A / 16 mm²	100 A / 3 AWG
Maximum current / Maximum cross section		101 A / 25 mm²	
Rated short-time withstand current (1s)		1920 A	
Short Circuit Current Rating (with specific conditions)			100 kA
Rated voltage		1000 V	600 V
Impulse withstand voltage		8000 V	
Protection		IP20	NEMA 1
Increased safety Ex e		693 V 69 A IEC/EN 60079-7 - IM2 II 2 GD Ex eb I/II/IIIC – 600 V 100 A	

Mounting instructions

Rail	TH 35-7.5, TH 35-15
Wire stripping length	13.5 mm 0.531 in
Tool	Flat screwdriver Ø 5.5 mm Ø 0.217 in
Torque	1.8 Nm ± 0.2 15.9 lb.in ± 1.77

The connecting capacity data for one Rigid - Solid / Stranded - Flexible conductor (when applicable) is a mandatory information required by IEC, UL and CSA standards (Copper conductors). All other data are provided as supplementary information only. For more details, please consult our CB, UL or CSA certificates and technical datasheet available on http://www.TE.com

CE, CB, RoHS, USR CNR, CSA, EAC Ex, ATEX, IECEx, BR-Ex e II, Haz Loc, BV, DNV

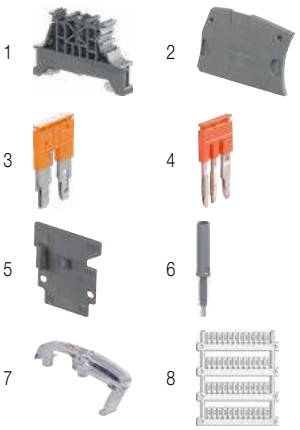

Accessories

	Description			Color	Type	Part Number		Pkg qty	Weight (1 pce) g
1	End stops	10 mm	0.394 in	Dark grey	BAM4	1SNK900001R0000		50	14.00
2	End sections	2.2 mm	0.087 in	Dark grey	ES4	1SNK505910R0000		20	2.20
3	Jumper bars	2 poles	76 A (IEC)	Orange	JB12-2	1SNK912302R0000		50	4.90
		3 poles	76 A (IEC)		JB12-3	1SNK912303R0000		50	7.60
		5 poles	76 A (IEC)		JB12-5	1SNK912305R0000		20	12.90
4	Cross spacing jumpers	3 poles	32 A (IEC)	Orange	JB85-3	1SNK900603R0000		10	2.80
5	Circuit separators	0 mm	0 in	Dark grey	CS	1SNK900101R0000		20	0.20
		3 mm	0.118 in		CS-R1	1SNK900103R0000		20	5.20
6	Test adapters	For test plugs DIA 2 mm 0.079 in		Dark grey	TP2	1SNK900203R0000		20	1.70
		For test plugs DIA 4 mm 0.157 in			TP4	1SNK900205R0000		20	2.40
7	Protecting covers	10 mm 0.394 in spacing		Transparent	PL10	1SNK900621R0000		10	3.10
8	Terminal block markers	Blank marker		White	MG-CPM 13 41791	1SNB041791R0612		1680	0.27
		Blank card			MC812	1SNK160000R0000		22	10.00
					MC812PA	1SNK169999R0000		20	14.00
		Universal wire markers holder		Grey	UMH	1SNK900611R0000		10	0.20

Complete list of accessories is indicated in the terminal block datasheet including end stops.
Some accessories such as jumper bars may modify the terminal block's ratings: Complete information available in the accessories section of the catalog.

Ground screw clamp terminal blocks

Description		Color	Type	Part Number		Pkg qty	Weight (1 pce) g
Ground	Profile aligned with ZS25	Green-yellow	ZS25-PE	1SNK512150R0000		20	38.00

1SNK161078S0201

Technical data valid for copper conductors only.

ZS35 screw clamp terminal blocks
Feed-through - 16 mm 0.630 in spacing

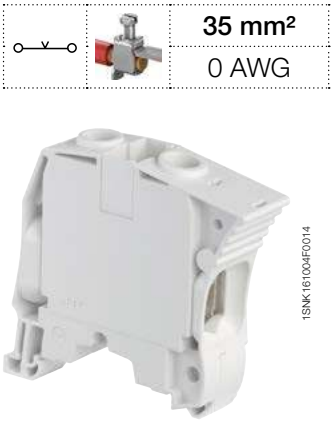

ZS35

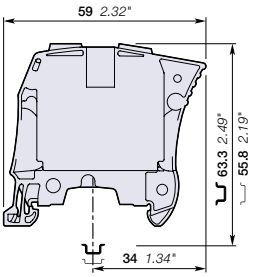

16 mm 0.630 in spacing

35 mm²
0 AWG

Description

Closed terminal block:
- No end section needed,
- Optimized rigidity,
- Perfectly adapted to solar applications: voltage is rated 1000 V AC / DC IEC.

Ordering details

Description		Color	Type	Part Number		Pkg qty	Weight (1 pce) g
Feed-through	Closed block	Grey	ZS35	1SNK516010R0000		20	53.40
		Blue	ZS35-BL	1SNK516020R0000		20	53.40
		Orange	ZS35-OR	1SNK516030R0000		20	53.40

Main technical data

Connecting capacity		IEC	UL - CSA
1 conductor per clamp	Rigid - Solid / Stranded	6 ... 35 mm²	10 ... 0 AWG
	Flexible	6 ... 35 mm²	
	with non insulated ferrule	4 ... 35 mm²	10 ... 2 AWG
	with insulated ferrule	4 ... 35 mm²	10 ... 2 AWG
	Gauge	A9-B9	
2 conductors per clamp	Rigid - Solid / Stranded	6 ... 16 mm²	10 ... 6 AWG
	Flexible	6 ... 16 mm²	
	with twin ferrule	4 ... 10 mm²	12 ... 8 AWG
Rated current / Rated cross section		125 A / 35 mm²	150 A / 0 AWG
Rated short-time withstand current (1s)		4200 A	
Short Circuit Current Rating (with specific conditions)			100 kA
Rated voltage		1000 V	600 V
Impulse withstand voltage		8000 V	
Protection		IP10	NEMA 1
Increased safety Ex e		693 V 125 A IEC/EN 60079-7 - IM2 II 2 GD Ex eb I/II/IIIC – 600 V 150 A UL 60079-7 - Class I, Zone 1, AEx e II	

Mounting instructions

Rail	TH 35-7.5, TH 35-15
Wire stripping length	17 mm 0.669 in
Tool	Flat screwdriver Ø 6.5 mm Ø 0.256 in
Torque	2.9 Nm ± 0.1 25.7 lb.in ± 0.885

The connecting capacity data for one Rigid - Solid / Stranded - Flexible conductor (when applicable) is a mandatory information required by IEC, UL and CSA standards (Copper conductors). All other data are provided as supplementary information only. For more details, please consult our CB, UL or CSA certificates and technical datasheet available on http://www.TE.com

CE, CB, RoHS, USR, CSA, EAC Ex, ATEX, IECEx, BR-Ex e II, Haz Loc, BV, DNV, Rina

3

Accessories

	Description			Color	Type	Part Number		Pkg qty	Weight (1 pce) g
1	**End stops**	10 mm	0.394 in	Dark grey	BAZH1	1SNK900102R0000		20	24.00
2	**Jumper bars**	2 poles	125 A (IEC)	Orange	JB16-2	1SNK916302R0000		10	10.00
		3 poles	125 A (IEC)		JB16-3	1SNK916303R0000		10	16.00
		4 poles	125 A (IEC)		JB16-4	1SNK916304R0000		10	22.00
		5 poles	125 A (IEC)		JB16-5	1SNK916305R0000		10	28.00
		10 poles	125 A (IEC)		JB16-10	1SNK916310R0000		10	56.60
3	**Circuit separators**	3 mm	0.118 in	Dark grey	CS-R1	1SNK900103R0000		20	5.20
4	**Protecting covers**	16 mm 0.630 in spacing		Transparent	PL16	1SNK900622R0000		10	4.60
5	**Terminal block markers**	Blank marker		White	MG-CPM 13 41791	1SNB041791R0612		1680	0.27
		Blank card			MC812	1SNK160000R0000		22	10.00
					MC812PA	1SNK169999R0000		20	14.00
		Universal wire markers holder		Grey	UMH	1SNK900611R0000		10	0.20

Complete list of accessories is indicated in the terminal block datasheet including end stops.
Some accessories such as jumper bars may modify the terminal block's ratings: Complete information available in the accessories section of the catalog.

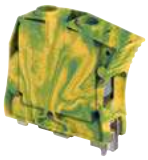

Ground screw clamp terminal blocks

Description		Color	Type	Part Number		Pkg qty	Weight (1 pce) g
Ground	Profile aligned with ZS35	Green-yellow	ZS35-PE	1SNK516150R0000		20	81.80

1SNK161019S0201

Technical data valid for copper conductors only.

ZS50 screw clamp terminal blocks
Feed-through - 16 mm 0.630 in spacing

ZS50

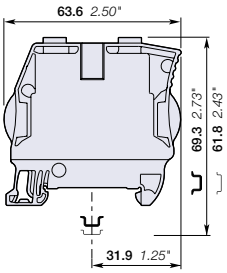

16 mm 0.630 in spacing

		50 mm²
		0 AWG

Description

Combine high performance with compact dimensions:
- Connect conductors up to 50 mm² (CB certified) 0 AWG in just 16 mm 0.630 in spacing,
- Perfectly adapted to solar applications: 1250 V DC (1000 V AC) IEC and 1000 V UL,
- Closed terminal block: no end section needed, optmized rigidity.

Ordering details

Description		Color	Type	Part Number		Pkg qty	Weight (1 pce) g
Feed-through	Closed block	Grey	ZS50	1SNK516011R0000		20	52.90
		Blue	ZS50-BL	1SNK516021R0000		20	52.90
		Yellow	ZS50-YL	1SNK516060R0000		20	52.90
		Red	ZS50-RD	1SNK516063R0000		20	52.90
		Black	ZS50-BK	1SNK516064R0000		20	52.90

Main technical data

Connecting capacity		IEC	UL - CSA
1 conductor per clamp	Rigid - Solid / Stranded	1 ... 50 mm²	18 ... 0 AWG
	Flexible	1 ... 50 mm²	
	with non insulated ferrule	1 ... 50 mm²	18 ... 0 AWG
	with insulated ferrule	1 ... 50 mm²	18 ... 0 AWG
	Gauge	Dia.11	
2 conductors per clamp	Rigid - Solid / Stranded	1 ... 25 mm²	18 ... 4 AWG
	Flexible	1 ... 25 mm²	
	with twin ferrule	1 ... 16 mm²	18 ... 4 AWG
Rated current / Rated cross section		150 A / 50 mm²	140 A / 0 AWG
Rated short-time withstand current (1s)		6000 A	
Short Circuit Current Rating (with specific conditions)			100 kA
Rated voltage		1000 V	1000 V
Impulse withstand voltage		8000 V	
Protection		IP10	NEMA 1
Increased safety Ex e		880 V 150 A IEC/EN 60079-7 - IM2 II 2 GD Ex eb I/II/IIIC	

Mounting instructions

Rail	TH 35-7.5, TH 35-15
Wire stripping length	17 mm 0.669 in
Tool	Flat screwdriver Ø 6.5 mm Ø 0.256 in
Torque	3 Nm ± 0.50 26.6 lb.in ± 4.43

The connecting capacity data for one Rigid - Solid / Stranded - Flexible conductor (when applicable) is a mandatory information required by IEC, UL and CSA standards (Copper conductors). All other data are provided as supplementary information only. For more details, please consult our CB, UL or CSA certificates and technical datasheet available on http://www.TE.com

CE, CB, RoHS, USR, CSA, EAC Ex, ATEX, IECEx, BR-Ex e II, Haz Loc, BV, DNV

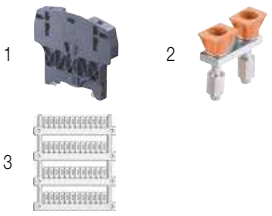

Accessories

	Description			Color	Type	Part Number		Pkg qty	Weight (1 pce) g
1	**End stops**	10 mm	0.394 in	Dark grey	BAZH1	1SNK900102R0000		20	24.00
2	**Jumper bars**	2 poles	125 A (IEC)	Orange	JB16-2	1SNK916302R0000		10	10.00
		3 poles	125 A (IEC)		JB16-3	1SNK916303R0000		10	16.00
		4 poles	125 A (IEC)		JB16-4	1SNK916304R0000		10	22.00
		5 poles	125 A (IEC)		JB16-5	1SNK916305R0000		10	28.00
		10 poles	125 A (IEC)		JB16-10	1SNK916310R0000		10	56.60
3	**Terminal block markers**	Blank marker		White	MG-CPM 13 41791	1SNB041791R0612		1680	0.27
		Blank card			MC812	1SNK160000R0000		22	10.00
					MC812PA	1SNK169999R0000		20	14.00
		Universal wire markers holder		Grey	UMH	1SNK900611R0000		10	0.20

Complete list of accessories is indicated in the terminal block datasheet including end stops.
Some accessories such as jumper bars may modify the terminal block's ratings: Complete information available in the accessories section of the catalog.

Ground screw clamp terminal blocks

Description		Color	Type	Part Number		Pkg qty	Weight (1 pce) g
Ground	Profile aligned with ZS50	Green-yellow	ZS50-PE	1SNK516151R0000		20	83.00

1SNK161069S0201

Technical data valid for copper conductors only.

ZS70 screw clamp terminal blocks
Feed-through - 22 mm 0.866 in spacing

ZS70

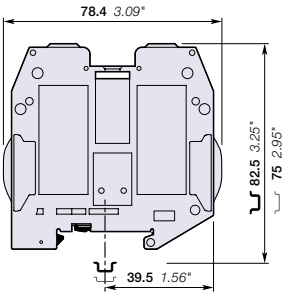

22 mm 0.866 in spacing

70 mm²
00 AWG

Description

Closed terminal block:
- No end section needed,
- Optimized rigidity,
- Perfectly adapted to solar applications: 1250 V DC (1000 V AC) IEC and 1000 V UL.

Ordering details

Description		Color	Type	Part Number		Pkg qty	Weight (1 pce) g
Feed-through	Closed block	Grey	ZS70	1SNK522010R0000		10	158.10
		Blue	ZS70-BL	1SNK522020R0000		10	158.10
		Yellow	ZS70-YL	1SNK522060R0000		10	158.10

Main technical data

Connecting capacity		IEC	UL - CSA
1 conductor per clamp	Rigid - Solid / Stranded	16 ... 95 mm²	4 ... 00 AWG
	Flexible	16 ... 70 mm²	
	with non insulated ferrule	16 ... 50 mm²	
	with insulated ferrule	16 ... 50 mm²	
	Gauge	B11	
2 conductors per clamp	Rigid - Solid / Stranded	16 ... 35 mm²	4 ... 2 AWG
	Flexible	16 ... 35 mm²	
	with twin ferrule	16 mm²	6 AWG
Rated current / Rated cross section		192 A / 70 mm²	159 A / 00 AWG
Rated short-time withstand current (1s)		8400 A	
Short Circuit Current Rating (with specific conditions)			100 kA
Rated voltage		1000 V	1000 V
Impulse withstand voltage		8000 V	
Protection		IP10	NEMA 1
Increased safety Ex e		693 V 192 A IEC/EN 60079-7 - IM2 II 2 GD Ex eb I/II/IIIC – 600 V 159 A UL 60079-7 - Class I, Zone 1, AEx e II, Ex e II U	

Mounting instructions

Rail	TH 35-7.5, TH 35-15
Wire stripping length	25 mm 0.984 in
Tool	Allen key Ø 6 mm Ø 0.236 in
Torque	6.5 Nm ± 0.5 57.5 lb.in ± 4.43

The connecting capacity data for one Rigid - Solid / Stranded - Flexible conductor (when applicable) is a mandatory information required by IEC, UL and CSA standards (Copper conductors). All other data are provided as supplementary information only. For more details, please consult our CB, UL or CSA certificates and technical datasheet available on http://www.TE.com

CE, CB, RoHS, USR CNR, CSA, EAC Ex, ATEX, IECEx, BR-Ex e II, Haz Loc, BV, DNV, Rina

3

1
2
3 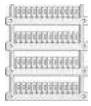

Accessories

	Description			Color	Type	Part Number		Pkg qty	Weight (1 pce) g
1	**End stops**	10 mm	0.394 in	Dark grey	BAZH1	1SNK900102R0000		20	24.00
2	**Jumper bars**	2 poles	192 A (IEC)		JB22-2	1SNK922302R0000		5	27.00
		3 poles	192 A (IEC)		JB22-3	1SNK922303R0000		5	43.30
		5 poles	192 A (IEC)		JB22-5	1SNK922305R0000		5	76.10
		10 poles	192 A (IEC)		JB22-10	1SNK922310R0000		5	157.40
3	**Terminal block markers**	Blank marker		White	MG-CPM 13 41791	1SNB041791R0612		1680	0.27
		Blank card			MC812	1SNK160000R0000		22	10.00
					MC812PA	1SNK169999R0000		20	14.00
		Universal wire markers holder		Grey	UMH	1SNK900611R0000		10	0.20

Complete list of accessories is indicated in the terminal block datasheet including end stops.
Some accessories such as jumper bars may modify the terminal block's ratings: Complete information available in the accessories section of the catalog.

Ground screw clamp terminal blocks

Description		Color	Type	Part Number		Pkg qty	Weight (1 pce) g
Ground	Profile aligned with ZS70	Green-yellow	ZS70-PE	1SNK522150R0000		10	222.00

1SNK161021S0201

Technical data valid for copper conductors only.

ZS95 screw clamp terminal blocks
Feed-through - 26 mm 1.024 in spacing

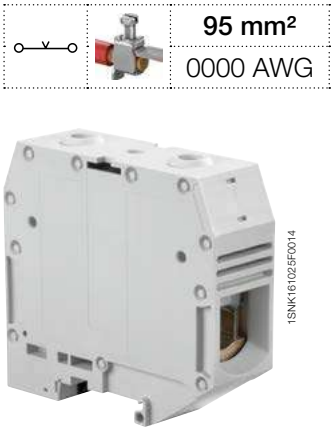

95 mm²
0000 AWG

1SNK161025F0014

ZS95

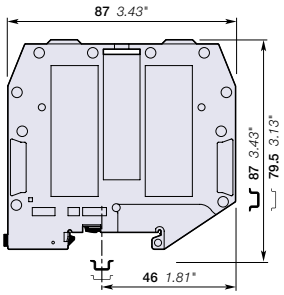

26 mm 1.024 in spacing

Description

Closed terminal block:
- No end section needed,
- Optimized rigidity,
- Perfectly adapted to solar applications: 1250 V DC (1000 V AC) IEC and 1000 V UL.

Ordering details

Description		Color	Type	Part Number		Pkg qty	Weight (1 pce) g
Feed-through	Closed block	Grey	ZS95	1SNK526010R0000		10	215.10
		Blue	ZS95-BL	1SNK526020R0000		10	215.10
		Yellow	ZS95-YL	1SNK526060R0000		10	215.10

Main technical data

Connecting capacity		IEC	UL - CSA
1 conductor per clamp	Rigid - Solid / Stranded	35 ... 120 mm²	2 ... 0000 AWG
	Flexible	35 ... 95 mm²	
	with non insulated ferrule	35 ... 50 mm²	
	with insulated ferrule	35 ... 50 mm²	
	Gauge	B12	
2 conductors per clamp	Rigid - Solid / Stranded	25 ... 35 mm²	4 ... 2 AWG
	Flexible	25 ... 35 mm²	
	with twin ferrule	16 mm²	6 AWG
Rated current / Rated cross section		232 A / 95 mm²	230 A / 0000 AWG
Rated short-time withstand current (1s)		11400 A	
Short Circuit Current Rating (with specific conditions)			100 kA
Rated voltage		1000 V	1000 V
Impulse withstand voltage		8000 V	
Protection		IP10	NEMA 1
Increased safety Ex e		693 V 232 A IEC/EN 60079-7 - IM2 II 2 GD Ex eb I/II/IIIC – 600 V 230 A UL 60079-7 - Class I, Zone 1, AEx e II	

Mounting instructions

Rail		TH 35-7.5, TH 35-15
Wire stripping length		26 mm 1.024 in
Tool		Allen key Ø 6 mm Ø 0.236 in
Torque		9.25 Nm ± 0.25 81.7 lb.in ± 2.21

The connecting capacity data for one Rigid - Solid / Stranded - Flexible conductor (when applicable) is a mandatory information required by IEC, UL and CSA standards (Copper conductors). All other data are provided as supplementary information only. For more details, please consult our CB, UL or CSA certificates and technical datasheet available on http://www.TE.com

CE, CB, RoHS, USR, CSA, EAC Ex, ATEX, IECEx, BR-Ex e II, Haz Loc, BV, DNV, Rina

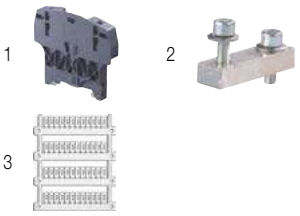

Accessories

	Description			Color	Type	Part Number		Pkg qty	Weight (1 pce) g
1	**End stops**	10 mm	0.394 in	Dark grey	BAZH1	1SNK900102R0000		20	24.00
2	**Jumper bars**	2 poles	232 A (IEC)		JB26-2	1SNK926302R0000		5	41.20
		3 poles	232 A (IEC)		JB26-3	1SNK926303R0000		5	65.70
		5 poles	232 A (IEC)		JB26-5	1SNK926305R0000		5	115.70
		10 poles	232 A (IEC)		JB26-10	1SNK926310R0000		5	241.50
3	**Terminal block markers**	Blank marker		White	MG-CPM 13 41791	1SNB041791R0612		1680	0.27
		Blank card			MC812	1SNK160000R0000		22	10.00
					MC812PA	1SNK169999R0000		20	14.00
		Universal wire markers holder		Grey	UMH	1SNK900611R0000		10	0.20

Complete list of accessories is indicated in the terminal block datasheet including end stops.
Some accessories such as jumper bars may modify the terminal block's ratings: Complete information available in the accessories section of the catalog.

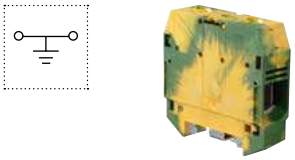

Ground screw clamp terminal blocks

Description		Color	Type	Part Number		Pkg qty	Weight (1 pce) g
Ground	Profile aligned with ZS95	Green-yellow	ZS95-PE	1SNK526150R0000		10	278.00

1SNK161023S0201

Technical data valid for copper conductors only.

ZS150 screw clamp terminal blocks
Feed-through - 31 mm 1.220 in spacing

ZS150

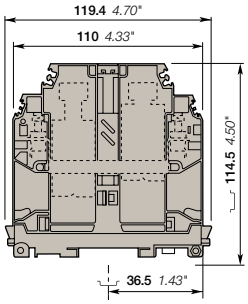

31 mm 1.220 in spacing

		150 mm²
		350 Kcmil

Description

- Perfectly adapted to solar applications : 1500V DC (1000V AC) IEC and 1000V UL,
- Closed terminal block: no end section needed, optimized rigidity,
- Ease your voltage monitoring or distribution with the 2 built-in derivations,
- Use of jumper bars requires the user to cut-out the partition.

Ordering details

Description		Color	Type	Part Number		Pkg qty	Weight (1 pce) g
Feed-through	Closed block with 2 x 10 mm² derivations.	Grey	ZS150	1SNK531010R0000		5	318.00
		Blue	ZS150-BL	1SNK531020R0000		5	318.00
		Yellow	ZS150-YL	1SNK531060R0000		5	318.00

Main technical data

Connecting capacity			IEC	UL	CSA
Main circuit with 1 conductor per clamp	Rigid - Solid / Stranded		35 ... 185 mm²	2 ... 350 Kcmil	2 ... 350 Kcmil
	Flexible		50 ... 150 mm²		
	with insulated ferrule				
	Gauge		B14		
Derivation with 1 conductor per clamp	Rigid - Solid / Stranded		0.5 ... 16 mm²	20 ... 8 AWG	20 ... 8 AWG
	Flexible		0.5 ... 10 mm²	20 ... 8 Kcmil	20 ... 8 Kcmil
	Gauge		B6		
Rated current / Rated cross section					
	Main circuit	Copper	309 A / 150 mm²	310 A / 350 Kcmil	310 A / 350 Kcmil
		Aluminium			
	Derivation		57 A / 10 mm²	50 A / 8 AWG	50 A / 8 AWG
Rated short-time withstand current (1s)			18000 A		
Rated voltage	V AC		1000 V	1000 V	1000 V
	V DC		1500		
Impulse withstand voltage			12000 V		
Protection			IP10	NEMA 1	
Increased safety Ex e			1000 V 309 A IEC/EN 60079-7 - IM2 II 2 GD Ex eb I/II/IIIC		

Mounting instructions

Rail		TH 35-7.5, TH 35-15
Main circuit		
Wire stripping length		40 mm 1.575 in
Tool		Allen key Ø 8 mm Ø 0.315 in
Torque		20 Nm 177 lb.in
Derivation		
Wire stripping length		12 mm 0.47 in
Tool		Flat screwdriver Ø 4 mm Ø 0.157 in
Torque		1.2 Nm ... 1.4 Nm 10.6 lb.in ... 12.3 lb.in

The connecting capacity data for one Rigid - Solid / Stranded - Flexible conductor (when applicable) is a mandatory information required by IEC, UL and CSA standards (Copper conductors). All other data are provided as supplementary information only. For more details, please consult our CB, UL or CSA certificates and technical datasheet available on http://www.TE.com

CE, CB, RoHS, USR CNR, CSA, EAC, ATEX, IECEx, BV

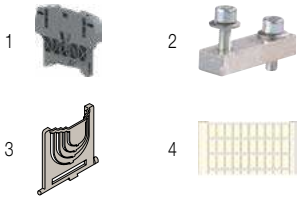

Accessories

	Description			Color	Type	Part Number		Pkg qty	Weight (1 pce) g
1	**End stops**	10 mm	0.394 in	Dark grey	BAZH1	1SNK900102R0000		20	24.00
2	**Jumper bars**	2 poles	309 A (IEC)		BJMI31.2	1SNA206053R0700		1	120.00
		3 poles	309 A (IEC)		BJMI31.3	1SNA206054R0000		1	190.00
3	**Protecting covers**				CPBP1	1SNA399788R1600		20	0.40
4	**Terminal block markers**	Blank card		White	RC1010	1SNA238000R1600		10	1.30
		Blank marker			MG-CPM 13 41791	1SNB041791R0612		1680	0.27
		Blank card			MC812	1SNK160000R0000		22	10.00
					MC812PA	1SNK169999R0000		20	14.00
		Universal wire markers holder		Grey	UMH	1SNK900611R0000		10	0.20

Complete list of accessories is indicated in the terminal block datasheet including end stops.
Some accessories such as jumper bars may modify the terminal block's ratings: Complete information available in the accessories section of the catalog.

3

1SNK161093S0201

Technical data valid for copper conductors only.

ZS240 screw clamp terminal blocks
Feed-through - 36 mm 1.417 in spacing

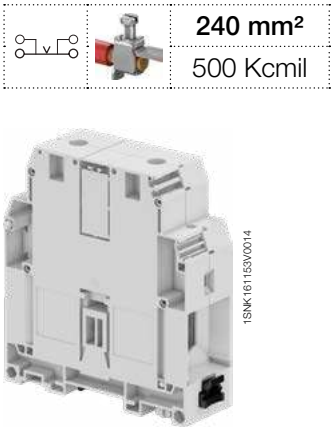

240 mm²
500 Kcmil

ZS240

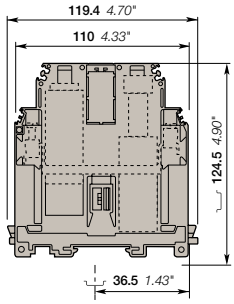

36 mm 1.417 in spacing

Description

- Perfectly adapted to solar applications : 1500V DC (1000V AC) IEC and 1000V UL,
- UL Certified for aluminum cables use - Closed terminal block: no end section needed, optimized rigidity,
- Ease your voltage monitoring or distribution with the 2 built-in derivations,
- Use of jumper bars requires the user to cut-out the partition.

Ordering details

Description		Color	Type	Part Number		Pkg qty	Weight (1 pce) g
Feed-through	Closed block with 2 x 10 mm² derivations.	Grey	ZS240	1SNK536010R0000		5	366.00
		Blue	ZS240-BL	1SNK536020R0000		5	366.00
		Yellow	ZS240-YL	1SNK536060R0000		5	366.00

Main technical data

Connecting capacity			IEC	UL	CSA
Main circuit with 1 conductor per clamp	Rigid - Solid / Stranded		50 ... 300 mm²	0 ... 500 Kcmil	0 ... 500 Kcmil
	Flexible		50 ... 240 mm²		
	with insulated ferrule				
	Gauge		B14		
Derivation with 1 conductor per clamp	Rigid - Solid / Stranded		0.5 ... 16 mm²	20 ... 8 AWG	20 ... 8 AWG
	Flexible		0.5 ... 10 mm²	20 ... 8 Kcmil	20 ... 8 Kcmil
	Gauge		B6		
Rated current / Rated cross section					
	Main circuit	Copper	415 A / 240 mm²	380 A / 500 Kcmil	380 A / 500 Kcmil
		Aluminium		271 / 500 Kcmil	271 / 500 Kcmil
	Derivation		57 A / 10 mm²	50 A / 8 AWG	50 A / 8 AWG
Rated short-time withstand current (1s)			28800 A		
Rated voltage	V AC		1000 V	1000 V	1000 V
	V DC		1500		
Impulse withstand voltage			12000 V		
Protection			IP10	NEMA 1	
Increased safety Ex e			1000 V 415 A IEC/EN 60079-7 - IM2 II 2 GD Ex eb I/II/IIIC		

Mounting instructions

Rail	TH 35-7.5, TH 35-15
Main circuit	
Wire stripping length	38 mm 1.496 in
Tool	Allen key Ø 8 mm Ø 0.315 in
Torque	25 Nm 221.3 lb.in
Derivation	
Wire stripping length	12 mm 0.47 in
Tool	Flat screwdriver Ø 4 mm Ø 0.157 in
Torque	1.2 Nm ... 1.4 Nm 10.6 lb.in ... 12.3 lb.in

The connecting capacity data for one Rigid - Solid / Stranded - Flexible conductor (when applicable) is a mandatory information required by IEC, UL and CSA standards (Copper conductors). All other data are provided as supplementary information only. For more details, please consult our CB, UL or CSA certificates and technical datasheet available on http://www.TE.com

CE CB RoHS USR CNR CSA EAC ATEX IECEx BV

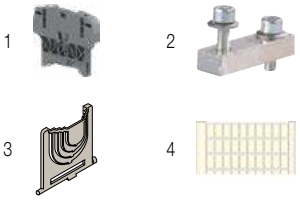

Accessories

	Description			Color	Type	Part Number		Pkg qty	Weight (1 pce) g
1	**End stops**	10 mm	0.394 in	Dark grey	BAZH1	1SNK900102R0000		20	24.00
2	**Jumper bars**	2 poles	415 A (IEC)		BJMI36.2	1SNA206126R2500		1	170.00
		3 poles	415 A (IEC)		BJMI36.3	1SNA206223R0600		1	260.00
3	**Protecting covers**				CPBP2	1SNA399787R0500		20	1.30
4	**Terminal block markers**	Blank card		White	RC1010	1SNA238000R1600		10	1.30
		Blank marker			MG-CPM 13 41791	1SNB041791R0612		1680	0.27
		Blank card			MC812	1SNK160000R0000		22	10.00
					MC812PA	1SNK169999R0000		20	14.00
		Universal wire markers holder		Grey	UMH	1SNK900611R0000		10	0.20

Complete list of accessories is indicated in the terminal block datasheet including end stops.
Some accessories such as jumper bars may modify the terminal block's ratings: Complete information available in the accessories section of the catalog.

1SNK161094S0201

Technical data valid for copper conductors only.

ZS4-PE screw clamp terminal blocks
Ground - 5.2 mm 0.205 in spacing

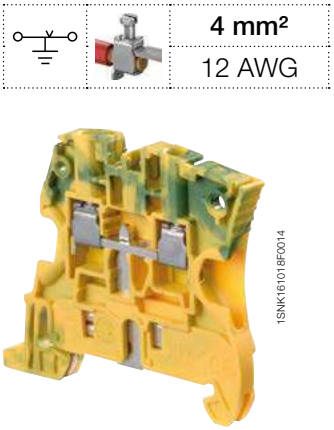

ZS4-PE

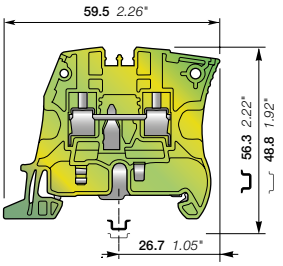

5.2 mm 0.205 in spacing

	4 mm²
	12 AWG

Description

Improve the safety of your installation in the event of a short-circuit thanks to our screwless rail contact:
- Rail contact non operator dependent,
- Performances above the requirements of IEC 60947-7-2 terminal block standard,
- Secured snap on or remove from the rail.

Ordering details

Description		Color	Type	Part Number		Pkg qty	Weight (1 pce) g
Ground	Screwless rail connection	Green-yellow	ZS4-PE	1SNK505150R0000		20	12.10

Main technical data

Connecting capacity		IEC	UL - CSA
1 conductor per clamp	Rigid - Solid / Stranded	0.2 ... 4 mm²	24 ... 12 AWG
	Flexible	0.22 ... 4 mm²	
	with non insulated ferrule	0.22 ... 4 mm²	24 ... 12 AWG
	with insulated ferrule	0.22 ... 2.5 mm²	24 ... 14 AWG
	Gauge	A3-B3	
Rated cross section		4 mm²	12 AWG
Rated short-time withstand current (1s)		480 A	396 A
Protection		IP20	NEMA 1
Explosive atmosphere classification		IM2 II 2 GD Ex eb I/II/IIIC – Class I, Zone 1, AEx e II, Ex e II U	

Mounting instructions

Rail	TH 35-7.5, TH 35-15
Wire stripping length	10.5 mm 0.412 in
Tool	Flat screwdriver Ø 3.5 mm Ø 0.138 in
Torque	0.6 Nm ± 0.1 5.31 lb.in ± 0.885

The connecting capacity data for one Rigid - Solid / Stranded - Flexible conductor (when applicable) is a mandatory information required by IEC, UL and CSA standards (Copper conductors). All other data are provided as supplementary information only. For more details, please consult our CB, UL or CSA certificates and technical datasheet available on http://www.TE.com

CE, CB, RoHS, USR CNR, CSA, EAC Ex, ATEX, IECEx, BR-Ex e II, Haz Loc, BV, DNV, Rina

3

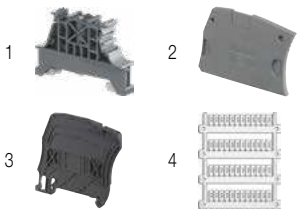

Accessories

	Description			Color	Type	Part Number		Pkg qty	Weight (1 pce) g
1	**End stops**	10 mm	0.394 in	Dark grey	BAM4	1SNK900001R0000		50	14.00
2	**End sections**	2.2 mm	0.087 in	Dark grey	ES4	1SNK505910R0000		20	2.20
3	**Circuit separators**	3 mm	0.118 in	Dark grey	CS-R1	1SNK900103R0000		20	5.20
4	**Terminal block markers**	Blank marker		White	MG-CPM 13 41790	1SNB041790R0512		1960	0.23
		Blank card			MC512	1SNK140000R0000		22	9.00
					MC512PA	1SNK149999R0000		20	10.00
		Universal wire markers holder		Grey	UMH	1SNK900611R0000		10	0.20

Complete list of accessories is indicated in the terminal block datasheet including end stops.
Some accessories such as jumper bars may modify the terminal block's ratings: Complete information available in the accessories section of the catalog.

1SNK161002S0201

Technical data valid for copper conductors only.

ZS6-PE screw clamp terminal blocks
Ground - 6 mm 0.236 in spacing

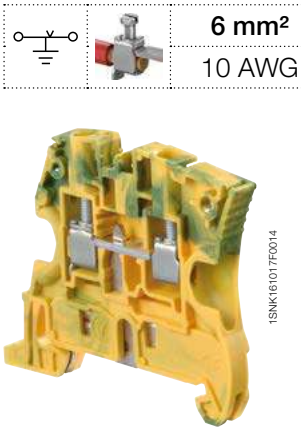

ZS6-PE

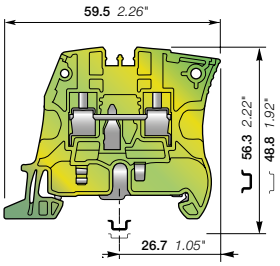

6 mm 0.236 in spacing

	6 mm²
	10 AWG

Description

Improve the safety of your installation in the event of a short-circuit thanks to our screwless rail contact:
- Rail contact non operator dependent,
- Performances above the requirements of IEC 60947-7-2 terminal block standard,
- Secured snap on or remove from the rail.

Ordering details

Description		Color	Type	Part Number		Pkg qty	Weight (1 pce) g
Ground	Screwless rail connection	Green-yellow	ZS6-PE	1SNK506150R0000		20	13.70

Main technical data

Connecting capacity		IEC	UL - CSA
1 conductor per clamp	Rigid - Solid / Stranded	0.2 ... 6 mm²	24 ... 10 AWG
	Flexible	0.2 ... 6 mm²	
	with non insulated ferrule	0.22 ... 4 mm²	24 ... 12 AWG
	with insulated ferrule	0.22 ... 4 mm²	24 ... 12 AWG
	Gauge	A4-B3	
Rated cross section		6 mm²	10 AWG
Rated short-time withstand current (1s)		720 A	636 A
Protection		IP20	NEMA 1
Explosive atmosphere classification		IM2 II 2 GD Ex eb I/II/IIIC – Class I, Zone 1, AEx e II, Ex e II U	

Mounting instructions

Rail	TH 35-7.5, TH 35-15
Wire stripping length	10.5 mm 0.412 in
Tool	Flat screwdriver Ø 4 mm Ø 0.157 in
Torque	0.85 Nm ± 0.15 7.52 lb.in ± 1.33

The connecting capacity data for one Rigid - Solid / Stranded - Flexible conductor (when applicable) is a mandatory information required by IEC, UL and CSA standards (Copper conductors). All other data are provided as supplementary information only. For more details, please consult our CB, UL or CSA certificates and technical datasheet available on http://www.TE.com

CE, CB, RoHS, USR CNR, CSA, EAC Ex, ATEX, IECEx, BR-Ex e II, Haz Loc, BV, DNV, Rina

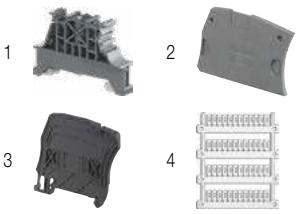

Accessories

	Description			Color	Type	Part Number		Pkg qty	Weight (1 pce) g
1	**End stops**	10 mm	0.394 in	Dark grey	BAM4	1SNK900001R0000		50	14.00
2	**End sections**	2.2 mm	0.087 in	Dark grey	ES4	1SNK505910R0000		20	2.20
3	**Circuit separators**	3 mm	0.118 in	Dark grey	CS-R1	1SNK900103R0000		20	5.20
4	**Terminal block markers**	Blank marker		White	MG-CPM 13 41791	1SNB041791R0612		1680	0.27
		Blank card			MC612	1SNK150000R0000		22	10.00
					MC612PA	1SNK159999R0000		20	11.00
		Universal wire markers holder		Grey	UMH	1SNK900611R0000		10	0.20

Complete list of accessories is indicated in the terminal block datasheet including end stops.
Some accessories such as jumper bars may modify the terminal block's ratings: Complete information available in the accessories section of the catalog.

1SNK161015S0201

Technical data valid for copper conductors only.

ZS6-3S-PE screw clamp terminal blocks

Ground with 3 connections - 6 mm 0.236 in spacing

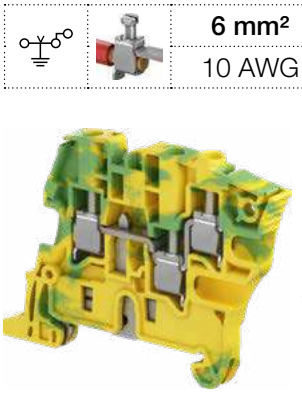

ZS6-3S-PE

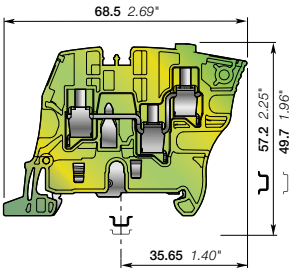

6 mm 0.236 in spacing

	6 mm²
	10 AWG

Description

Improve the safety of your installation in the event of a short-circuit thanks to our screwless rail contact:
- rail contact non operator dependent, secured snap on or off the rail,
- Same profile as ZS6-3S for aligned marking and identical end section.

Ordering details

Description		Color	Type	Part Number		Pkg qty	Weight (1 pce) g
Ground	Screwless rail connection	Green-yellow	ZS6-3S-PE	1SNK506151R0000		25	16.20

Main technical data

Connecting capacity		IEC	UL - CSA
1 conductor per clamp	Rigid - Solid / Stranded	0.2 ... 6 mm²	24 ... 10 AWG
	Flexible	0.22... 6 mm²	
	with non insulated ferrule	0.22 ... 4 mm²	24 ... 12 AWG
	with insulated ferrule	0.22 ... 4 mm²	24 ... 12 AWG
	Gauge	A4-B3	
Rated cross section		4 mm²	10 AWG
Maximum cross section		6 mm²	
Rated short-time withstand current (1s)		480 A	636 A
Maximum short-time withstand current (1s)		480 A	
Protection		IP20	NEMA 1
Explosive atmosphere classification		IM2 II 2 GD Ex eb I/II/IIIC – Class I, Zone 1, AEx e II	

Mounting instructions

Rail	TH 35-7.5, TH 35-15
Wire stripping length	10.5 mm 0.413 in
Tool	Flat screwdriver Ø 4 mm Ø 0.157 in
Torque	0.75 Nm ± 0.05 6.64 lb.in ± 0.443

The connecting capacity data for one Rigid - Solid / Stranded - Flexible conductor (when applicable) is a mandatory information required by IEC, UL and CSA standards (Copper conductors). All other data are provided as supplementary information only. For more details, please consult our CB, UL or CSA certificates and technical datasheet available on http://www.TE.com

CE, CB, RoHS, USR, CSA, EAC Ex, ATEX, IECEx, BR-Ex e II, Haz Loc, BV, DNV

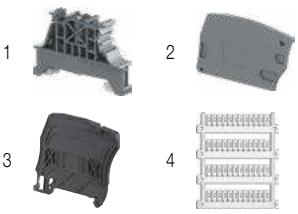

Accessories

	Description			Color	Type	Part Number		Pkg qty	Weight (1 pce) g
1	**End stops**	10 mm	0.394 in	Dark grey	BAM4	1SNK900001R0000		50	14.00
2	**End sections**	2.2 mm	0.087 in	Dark grey	ES6-3S	1SNK505912R0000		20	2.50
3	**Circuit separators**	3 mm	0.118 in	Dark grey	CS-R1	1SNK900103R0000		20	5.20
4	**Terminal block markers**	Blank marker		White	MG-CPM 13 41791	1SNB041791R0612		1680	0.27
		Blank card			MC612	1SNK150000R0000		22	10.00
					MC612PA	1SNK159999R0000		20	11.00
		Universal wire markers holder		Grey	UMH	1SNK900611R0000		10	0.20

Complete list of accessories is indicated in the terminal block datasheet including end stops.
Some accessories such as jumper bars may modify the terminal block's ratings: Complete information available in the accessories section of the catalog.

1SNK161080S0201

Technical data valid for copper conductors only.

ZS6-4S-PE screw clamp terminal blocks

Ground with 4 connections - 6 mm 0.236 in spacing

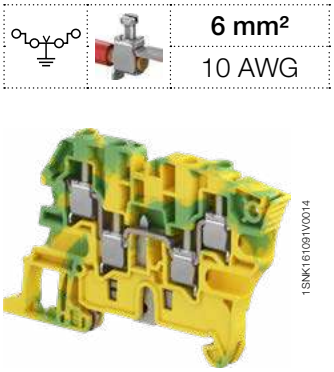

ZS6-4S-PE

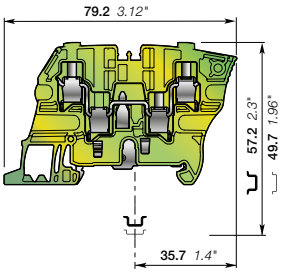

6 mm 0.236 in spacing

	6 mm²
	10 AWG

Description

Improve the safety of your installation in the event of a short-circuit thanks to our screwless rail contact:

- rail contact non operator dependent, secured snap on or off the rail,
- Same profile as ZS6-4S for aligned marking and identical end section.

Ordering details

Description		Color	Type	Part Number		Pkg qty	Weight (1 pce) g
Ground	Screwless rail connection	Green-yellow	ZS6-4S-PE	1SNK506152R0000		25	19.40

Main technical data

Connecting capacity		IEC	UL - CSA
1 conductor per clamp	Rigid - Solid / Stranded	0.2 ... 6 mm²	24 ... 10 AWG
	Flexible	0.22... 6 mm²	
	with non insulated ferrule	0.22 ... 4 mm²	24 ... 12 AWG
	with insulated ferrule	0.22 ... 4 mm²	24 ... 12 AWG
	Gauge	A4-B3	
Rated cross section		4 mm²	10 AWG
Maximum cross section		6 mm²	
Rated short-time withstand current (1s)		480 A	636 A
Maximum short-time withstand current (1s)		480 A	
Protection		IP20	NEMA 1
Explosive atmosphere classification		IM2 II 2 GD Ex eb I/II/IIIC – Class I, Zone 1, AEx e II	

Mounting instructions

Rail	TH 35-7.5, TH 35-15
Wire stripping length	10.5 mm 0.413 in
Tool	Flat screwdriver Ø 4 mm Ø 0.157 in
Torque	0.75 Nm ± 0.05 6.64 lb.in ± 0.443

The connecting capacity data for one Rigid - Solid / Stranded - Flexible conductor (when applicable) is a mandatory information required by IEC, UL and CSA standards (Copper conductors). All other data are provided as supplementary information only. For more details, please consult our CB, UL or CSA certificates and technical datasheet available on http://www.TE.com

CE, CB, RoHS, USR, CSA, EAC Ex, ATEX, IECEx, BR-Ex e II, Haz Loc, BV, DNV

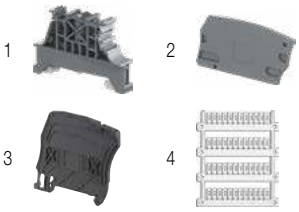

Accessories

	Description			Color	Type	Part Number		Pkg qty	Weight (1 pce) g
1	**End stops**	10 mm	0.394 in	Dark grey	BAM4	1SNK900001R0000		50	14.00
2	**End sections**	2.2 mm	0.087 in	Dark grey	ES6-4S	1SNK505911R0000		20	3.10
3	**Circuit separators**	3 mm	0.118 in	Dark grey	CS-R1	1SNK900103R0000		20	5.20
4	**Terminal block markers**	Blank marker		White	MG-CPM 13 41791	1SNB041791R0612		1680	0.27
		Blank card			MC612	1SNK150000R0000		22	10.00
					MC612PA	1SNK159999R0000		20	11.00
		Universal wire markers holder		Grey	UMH	1SNK900611R0000		10	0.20

Complete list of accessories is indicated in the terminal block datasheet including end stops.
Some accessories such as jumper bars may modify the terminal block's ratings: Complete information available in the accessories section of the catalog.

1SNK161081S0201

Technical data valid for copper conductors only.

ZS10-PE screw clamp terminal blocks
Ground - 8 mm 0.315 in spacing

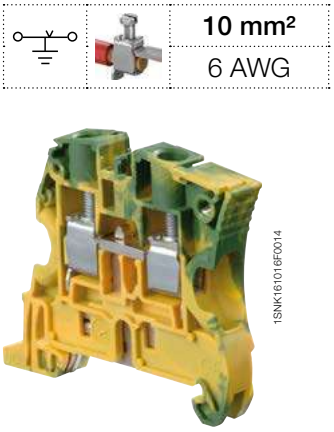

ZS10-PE

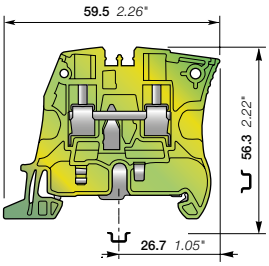

8 mm 0.315 in spacing

	10 mm²
	6 AWG

Description

Improve the safety of your installation in the event of a short-circuit thanks to our screwless rail contact:
- Rail contact non operator dependent,
- Performances above the requirements of IEC 60947-7-2 terminal block standard,
- Secured snap on or remove from the rail.

Ordering details

Description		Color	Type	Part Number		Pkg qty	Weight (1 pce) g
Ground	Screwless rail connection	Green-yellow	ZS10-PE	1SNK508150R0000		20	22.50

Main technical data

Connecting capacity		IEC	UL - CSA
1 conductor per clamp	Rigid - Solid / Stranded	0.5 ... 10 mm²	24 ... 6 AWG
	Flexible	0.5 ... 10 mm²	
	with non insulated ferrule	0.5 ... 10 mm²	24 ... 8 AWG
	with insulated ferrule	0.5 ... 6 mm²	24 ... 8 AWG
	Gauge	A5-B5	
Rated cross section		10 mm²	6 AWG
Rated short-time withstand current (1s)		1200 A	1596 A
Protection		IP20	NEMA 1
Explosive atmosphere classification		IM2 II 2 GD Ex eb I/II/IIIC – Class I, Zone 1, AEx e II, Ex e II U	

Mounting instructions

Rail	TH 35-7.5, TH 35-15
Wire stripping length	12 mm 0.472 in
Tool	Flat screwdriver Ø 4 mm Ø 0.157 in
Torque	1.3 Nm ± 0.3 11.5 lb.in ± 2.65

The connecting capacity data for one Rigid - Solid / Stranded - Flexible conductor (when applicable) is a mandatory information required by IEC, UL and CSA standards (Copper conductors). All other data are provided as supplementary information only. For more details, please consult our CB, UL or CSA certificates and technical datasheet available on http://www.TE.com

CE, CB, RoHS, USR CNR, CSA, EAC Ex, ATEX, IECEx, BR-Ex e II, Haz Loc, BV, DNV, Rina

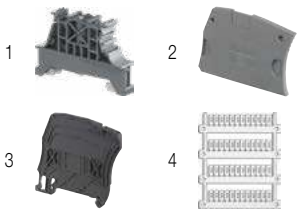

Accessories

	Description			Color	Type	Part Number		Pkg qty	Weight (1 pce) g
1	**End stops**	10 mm	0.394 in	Dark grey	BAM4	1SNK900001R0000		50	14.00
2	**End sections**	2.2 mm	0.087 in	Dark grey	ES4	1SNK505910R0000		20	2.20
3	**Circuit separators**	3 mm	0.118 in	Dark grey	CS-R1	1SNK900103R0000		20	5.20
4	**Terminal block markers**	Blank marker		White	MG-CPM 13 41791	1SNB041791R0612		1680	0.27
		Blank card			MC812	1SNK160000R0000		22	10.00
					MC812PA	1SNK169999R0000		20	14.00
		Universal wire markers holder		Grey	UMH	1SNK900611R0000		10	0.20

Complete list of accessories is indicated in the terminal block datasheet including end stops.
Some accessories such as jumper bars may modify the terminal block's ratings: Complete information available in the accessories section of the catalog.

1SNK161016S0201

Technical data valid for copper conductors only.

ZS16-PE screw clamp terminal blocks
Ground - 10 mm 0.394 in spacing

16 mm²
4 AWG

1SNK161019F0014

ZS16-PE

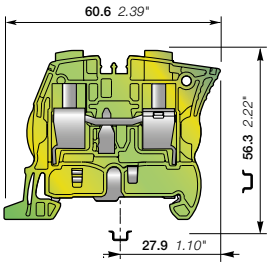

10 mm 0.394 in spacing

Description

Improve the safety of your installation in the event of a short-circuit thanks to our screwless rail contact:
- Rail contact non operator dependent,
- Performances above the requirements of IEC 60947-7-2 terminal block standard,
- Secured snap on or remove from the rail,
- PE.N function available by combining ZS16-PE with ZS16-BL and 2 poles jumper bar JB10-2.

Ordering details

Description		Color	Type	Part Number		Pkg qty	Weight (1 pce) g
Ground	Screwless rail connection	Green-yellow	ZS16-PE	1SNK510150R0000		20	32.00

Main technical data

Connecting capacity		IEC	UL - CSA
1 conductor per clamp	Rigid - Solid / Stranded	0.5 ... 16 mm²	24 ... 4 AWG
	Flexible	0.5 ... 16 mm²	
	with non insulated ferrule	0.5 ... 16 mm²	24 ... 4 AWG
	with insulated ferrule	0.5 ... 10 mm²	24 ... 8 AWG
	Gauge	A6-B6	
Rated cross section		16 mm²	4 AWG
Rated short-time withstand current (1s)		1920 A	2544 A
Protection		IP20	NEMA 1
Explosive atmosphere classification		IM2 II 2 GD Ex eb I/II/IIIC – Class I, Zone 1, AEx e II, Ex e II U	

Mounting instructions

Rail		TH 35-7.5, TH 35-15
Wire stripping length		13.5 mm 0.531 in
Tool		Flat screwdriver Ø 5.5 mm Ø 0.217 in
Torque		1.8 Nm ± 0.2 15.9 lb.in ± 1.77

The connecting capacity data for one Rigid - Solid / Stranded - Flexible conductor (when applicable) is a mandatory information required by IEC, UL and CSA standards (Copper conductors). All other data are provided as supplementary information only. For more details, please consult our CB, UL or CSA certificates and technical datasheet available on http://www.TE.com

CE, CB, RoHS, USR CNR, CSA, EAC Ex, ATEX, IECEx, BR-Ex e II, Haz Loc, BV, DNV, Rina

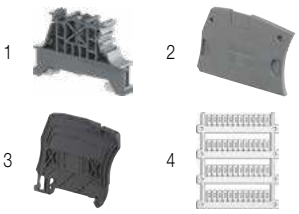

Accessories

	Description			Color	Type	Part Number		Pkg qty	Weight (1 pce) g
1	**End stops**	10 mm	0.394 in	Dark grey	BAM4	1SNK900001R0000		50	14.00
2	**End sections**	2.2 mm	0.087 in	Dark grey	ES4	1SNK505910R0000		20	2.20
3	**Circuit separators**	3 mm	0.118 in	Dark grey	CS-R1	1SNK900103R0000		20	5.20
4	**Terminal block markers**	Blank marker		White	MG-CPM 13 41791	1SNB041791R0612		1680	0.27
		Blank card			MC812	1SNK160000R0000		22	10.00
					MC812PA	1SNK169999R0000		20	14.00
		Universal wire markers holder		Grey	UMH	1SNK900611R0000		10	0.20

Complete list of accessories is indicated in the terminal block datasheet including end stops.
Some accessories such as jumper bars may modify the terminal block's ratings: Complete information available in the accessories section of the catalog.

1SNK161018S0201

Technical data valid for copper conductors only.

ZS25-PE screw clamp terminal blocks
Ground - 12 mm 0.472 in spacing

25 mm²
3 AWG

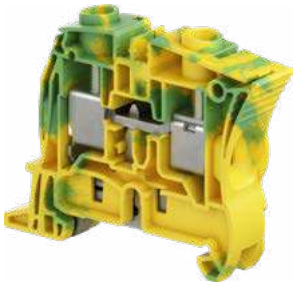

1SNK161092V0014

ZS25-PE

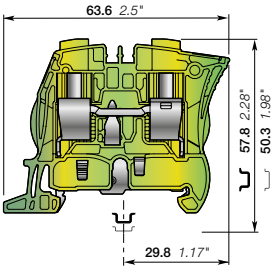

12 mm 0.472 in spacing

Description

Improve the safety of your installation in the event of a short-circuit thanks to our screwless rail contact:
- rail contact non operator dependent, secured snap on or off the rail,
- Same profile as ZS25 for aligned marking and identical end section.

Ordering details

Description		Color	Type	Part Number		Pkg qty	Weight (1 pce) g
Ground	Screwless rail connection	Green-yellow	ZS25-PE	1SNK512150R0000		20	38.00

Main technical data

Connecting capacity		IEC	UL - CSA
1 conductor per clamp	Rigid - Solid / Stranded	0.5 ... 25 mm²	24 ... 3 AWG
	Flexible	0.5 ... 25 mm²	
	with non insulated ferrule	0.5 ... 16 mm²	24 ... 4 AWG
	with insulated ferrule	0.5 ... 16 mm²	24 ... 8 AWG
	Gauge	A6-B6	
Rated cross section		16 mm²	3 AWG
Maximum cross section		25 mm²	
Rated short-time withstand current (1s)		1920 A	3204 A
Maximum short-time withstand current (1s)		3000 A	
Protection		IP20	NEMA 1
Explosive atmosphere classification		IM2 II 2 GD Ex eb I/II/IIIC – Class I, Zone 1, AEx e II, Ex e II U	

Mounting instructions

Rail	TH 35-7.5, TH 35-15
Wire stripping length	13.5 mm 0.531 in
Tool	Flat screwdriver Ø 5.5 mm Ø 0.217 in
Torque	1.8 Nm ± 0.2 15.9 lb.in ± 1.77

The connecting capacity data for one Rigid - Solid / Stranded - Flexible conductor (when applicable) is a mandatory information required by IEC, UL and CSA standards (Copper conductors). All other data are provided as supplementary information only. For more details, please consult our CB, UL or CSA certificates and technical datasheet available on http://www.TE.com

CE, CB, RoHS, USR CNR, CSA, EAC Ex, ATEX, IECEx, BR-Ex e II, Haz Loc, BV, DNV

3

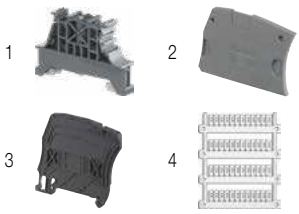

Accessories

	Description			Color	Type	Part Number		Pkg qty	Weight (1 pce) g
1	**End stops**	10 mm	0.394 in	Dark grey	BAM4	1SNK900001R0000		50	14.00
2	**End sections**	2.2 mm	0.087 in	Dark grey	ES4	1SNK505910R0000		20	2.20
3	**Circuit separators**	3 mm	0.118 in	Dark grey	CS-R1	1SNK900103R0000		20	5.20
4	**Terminal block markers**	Blank marker		White	MG-CPM 13 41791	1SNB041791R0612		1680	0.27
		Blank card			MC812	1SNK160000R0000		22	10.00
					MC812PA	1SNK169999R0000		20	14.00
		Universal wire markers holder		Grey	UMH	1SNK900611R0000		10	0.20

Complete list of accessories is indicated in the terminal block datasheet including end stops.
Some accessories such as jumper bars may modify the terminal block's ratings: Complete information available in the accessories section of the catalog.

1SNK161082S0201

Technical data valid for copper conductors only.

ZS35-PE screw clamp terminal blocks
Ground - 16 mm 0.630 in spacing

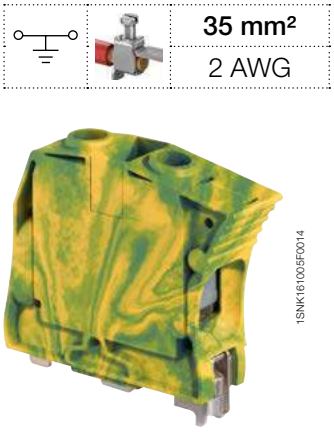

35 mm²	
2 AWG	

Description

Reliable electrical and mechanical contact with the rail that exceeds the requirements of IEC 60947-7-2 terminal block standard.

1SNK161005F0014

ZS35-PE

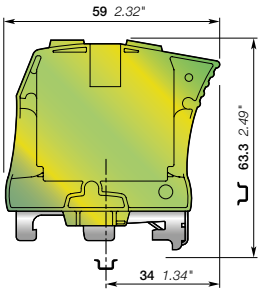

16 mm 0.630 in spacing

Ordering details

Description		Color	Type	Part Number		Pkg qty	Weight (1 pce) g
Ground	Screw rail connection	Green-yellow	ZS35-PE	1SNK516150R0000		20	81.80

Main technical data

Connecting capacity		IEC	UL - CSA
1 conductor per clamp	Rigid - Solid / Stranded	6 ... 35 mm²	10 ... 2 AWG
	Flexible	6 ... 35 mm²	
	with non insulated ferrule	4 ... 35 mm²	10 ... 2 AWG
	with insulated ferrule	4 ... 35 mm²	10 ... 2 AWG
	Gauge	A9	
Rated cross section		35 mm²	2 AWG
Rated short-time withstand current (1s)		4200 A	4032 A
Protection		IP10	NEMA 1
Explosive atmosphere classification		IM2 II 2 GD Ex eb I/II/IIIC – Class I, Zone 1, AEx e II	

Mounting instructions

Rail	TH 35-7.5, TH 35-15
Wire stripping length	17 mm 0.669 in
Tool Screw clamp	Flat screwdriver Ø 6.5 mm Ø 0.256 in
Rail connection screw	Ø 5.5 Ø 0.217
Torque Screw clamp	2.65 Nm ± 0.15 23.4 lb.in ± 1.33
Rail connection screw	1.6 Nm ± 0.15 Nm 14.2 lb.in ± 1.33 lb.in

The connecting capacity data for one Rigid - Solid / Stranded - Flexible conductor (when applicable) is a mandatory information required by IEC, UL and CSA standards (Copper conductors). All other data are provided as supplementary information only. For more details, please consult our CB, UL or CSA certificates and technical datasheet available on http://www.TE.com

CE, CB, RoHS, USR, CSA, EAC Ex, ATEX, IECEx, BR-Ex e II, Haz Loc, BV, DNV, Rina

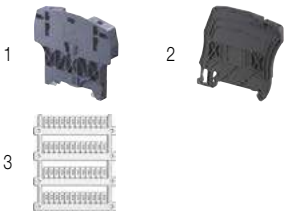

Accessories

	Description			Color	Type	Part Number		Pkg qty	Weight (1 pce) g
1	**End stops**	10 mm	0.394 in	Dark grey	BAZH1	1SNK900102R0000		20	24.00
2	**Circuit separators**	3 mm	0.118 in	Dark grey	CS-R1	1SNK900103R0000		20	5.20
3	**Terminal block markers**	Blank marker		White	MG-CPM 13 41791	1SNB041791R0612		1680	0.27
		Blank card			MC812	1SNK160000R0000		22	10.00
					MC812PA	1SNK169999R0000		20	14.00
		Universal wire markers holder		Grey	UMH	1SNK900611R0000		10	0.20

Complete list of accessories is indicated in the terminal block datasheet including end stops.
Some accessories such as jumper bars may modify the terminal block's ratings: Complete information available in the accessories section of the catalog.

1SNK161020S0201

Technical data valid for copper conductors only.

ZS35-PEN screw clamp terminal blocks
Ground + neutral - 32 mm 1.260 in spacing

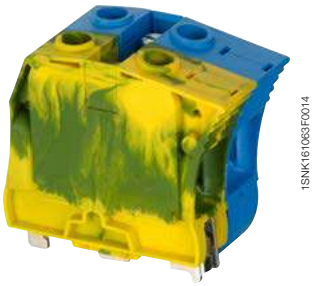

ZS35-PEN

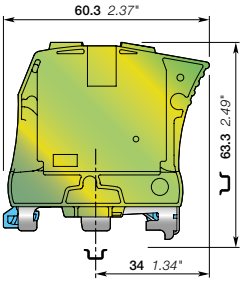

32 mm 1.260 in spacing

Description

Simplify your PE.N connection with ZS35-PE block connected to ZS35-BL through a pre-mounted jumper.

Ordering details

Description	Color	Type	Part Number		Pkg qty	Weight (1 pce) g
Ground + neutral	Green-yellow	ZS35-PEN	1SNK516170R0000		10	236.00

Main technical data

Connecting capacity		IEC	UL - CSA
1 conductor per clamp	Rigid - Solid / Stranded	6 ... 35 mm²	
	Flexible	6 ... 35 mm²	
	with non insulated ferrule	6 ... 35 mm²	10 ... 2 AWG
	with insulated ferrule	6 ... 35 mm²	
	Gauge	A9	
Rated cross section		35 mm²	
Rated short-time withstand current (1s)		4200 A	
Protection		IP10	NEMA 1

Mounting instructions

Rail	TH 35-7.5, TH 35-15
Wire stripping length	17 mm 0.669 in
Tool Screw clamp	Flat screwdriver Ø 6.5 mm Ø 0.256 in
Rail connection screw	Ø 5.5 Ø 0.217
Torque Screw clamp	2.65 Nm ± 0.15 23.5 lb.in ± 1.33
Rail connection screw	1.6 Nm ± 0.15 Nm 14.2 lb.in ± 1.33 lb.in

The connecting capacity data for one Rigid - Solid / Stranded - Flexible conductor (when applicable) is a mandatory information required by IEC, UL and CSA standards (Copper conductors). All other data are provided as supplementary information only. For more details, please consult our CB, UL or CSA certificates and technical datasheet available on http://www.TE.com

CE RoHS EAC

Accessories

	Description			Color	Type	Part Number		Pkg qty	Weight (1 pce) g
1	End stops	10 mm	0.394 in	Dark grey	BAZH1	1SNK900102R0000		20	24.00
2	Terminal block markers	Blank marker		White	MG-CPM 13 41791	1SNB041791R0612		1680	0.27
		Blank card			MC812	1SNK160000R0000		22	10.00
					MC812PA	1SNK169999R0000		20	14.00
		Universal wire markers holder		Grey	UMH	1SNK900611R0000		10	0.20

Complete list of accessories is indicated in the terminal block datasheet including end stops.
Some accessories such as jumper bars may modify the terminal block's ratings: Complete information available in the accessories section of the catalog.

3

1SNK161047S0201

Technical data valid for copper conductors only.

ZS50-PE screw clamp terminal blocks

Ground - 16 mm 0.630 in spacing

50 mm²
0 AWG

Description

– Reliable electrical and mechanical contact with the rail that exceeds the requirements of the IEC 60947-7-2 terminal block standard.

1SNK161093V0014

ZS50-PE

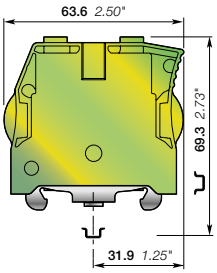

16 mm 0.630 in spacing

Ordering details

Description		Color	Type	Part Number		Pkg qty	Weight (1 pce) g
Ground	Screw rail connection	Green-yellow	ZS50-PE	1SNK516151R0000		20	83.00

Main technical data

Connecting capacity		IEC	UL - CSA
1 conductor per clamp	Rigid - Solid / Stranded	1 … 50 mm²	18 … 0 AWG
	Flexible	1 … 50 mm²	
	with non insulated ferrule	1 … 50 mm²	18 … 0 AWG
	with insulated ferrule	1 … 50 mm²	18 … 0 AWG
	Gauge	Dia.11	
Rated cross section		50 mm²	0 AWG
Rated short-time withstand current (1s)		6000 A	6420 A
Protection		IP10	NEMA 1
Explosive atmosphere classification		IM2 II 2 GD Ex eb I/II/IIIC – Class I, Zone 1, AEx e II	

The connecting capacity data for one Rigid - Solid / Stranded - Flexible conductor (when applicable) is a mandatory information required by IEC, UL and CSA standards (Copper conductors). All other data are provided as supplementary information only. For more details, please consult our CB, UL or CSA certificates and technical datasheet available on http://www.TE.com

CE, CB, RoHS, USR, CSA, EAC Ex, ATEX, IECEx, BR-Ex e II, Haz Loc, BV, DNV

Mounting instructions

Rail	TH 35-7.5, TH 35-15
Wire stripping length	17 mm 0.669 in
Tool Screw clamp	Flat screwdriver Ø 6.5 mm Ø 0.256 in
Rail connection screw	Ø 6.5 Ø 0.256
Torque Screw clamp	3 Nm ± 0.50 26.6 lb.in ± 4.43
Rail connection screw	3 Nm ± 0.25 Nm 26.553 lb.in ± 2.21 lb.in

1

2 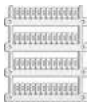

Accessories

	Description			Color	Type	Part Number		Pkg qty	Weight (1 pce) g
1	**End stops**	10 mm	0.394 in	Dark grey	BAZH1	1SNK900102R0000		20	24.00
2	**Terminal block markers**	Blank marker		White	MG-CPM 13 41791	1SNB041791R0612		1680	0.27
		Blank card			MC812	1SNK160000R0000		22	10.00
					MC812PA	1SNK169999R0000		20	14.00
		Universal wire markers holder		Grey	UMH	1SNK900611R0000		10	0.20

Complete list of accessories is indicated in the terminal block datasheet including end stops.
Some accessories such as jumper bars may modify the terminal block's ratings: Complete information available in the accessories section of the catalog.

1SNK161070S0201

Technical data valid for copper conductors only.

ZS70-PE screw clamp terminal blocks
Ground - 22 mm 0.866 in spacing

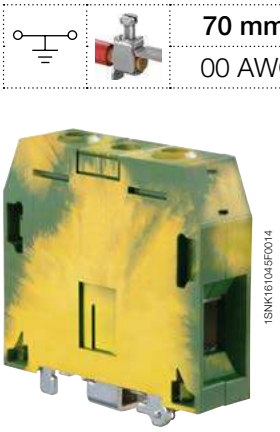

ZS70-PE

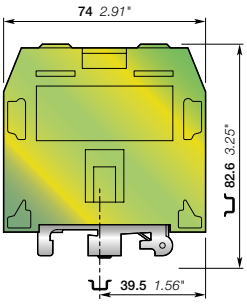

22 mm 0.866 in spacing

		70 mm²
		00 AWG

Description

Reliable electrical and mechanical contact with the rail that exceeds the requirements of IEC 60947-7-2 terminal block standard.

Ordering details

Description		Color	Type	Part Number		Pkg qty	Weight (1 pce) g
Ground	Screw rail connection	Green-yellow	ZS70-PE	1SNK522150R0000		10	222.00

Main technical data

Connecting capacity		IEC	UL - CSA
1 conductor per clamp	Rigid - Solid / Stranded	16 ... 95 mm²	4 ... 00 AWG
	Flexible	16 ... 70 mm²	
	with non insulated ferrule	16 ... 50 mm²	
	with insulated ferrule	16 ... 50 mm²	
	Gauge	B11	
Rated cross section		70 mm²	00 AWG
Rated short-time withstand current (1s)		8400 A	8088 A
Protection		IP10	NEMA 1
Explosive atmosphere classification		IM2 II 2 GD Ex eb I/II/IIIC – Class I, Zone 1, AEx e II, Ex e II U	

Mounting instructions

Rail	TH 35-15
Wire stripping length	25 mm 0.984 in
Tool Screw clamp	Allen key Ø 6 mm Ø 0.236 in
Rail connection screw	Ø 4 Ø 0.158
Torque Screw clamp	6.5 Nm ± 0.5 57.5 lb.in ± 4.43
Rail connection screw	1.9 Nm ± 0.1 Nm 16.82 lb.in ± 0.885 lb.in

The connecting capacity data for one Rigid - Solid / Stranded - Flexible conductor (when applicable) is a mandatory information required by IEC, UL and CSA standards (Copper conductors). All other data are provided as supplementary information only. For more details, please consult our CB, UL or CSA certificates and technical datasheet available on http://www.TE.com

CE, CB, RoHS, USR CNR, CSA, EAC Ex, ATEX, IECEx, BR-Ex e II, Haz Loc, BV, DNV, Rina

Accessories

	Description			Color	Type	Part Number		Pkg qty	Weight (1 pce) g
1	**End stops**	10 mm	0.394 in	Dark grey	BAZH1	1SNK900102R0000		20	24.00
2	**Terminal block markers**	Blank marker		White	MG-CPM 13 41791	1SNB041791R0612		1680	0.27
		Blank card			MC812	1SNK160000R0000		22	10.00
					MC812PA	1SNK169999R0000		20	14.00
		Universal wire markers holder		Grey	UMH	1SNK900611R0000		10	0.20

Complete list of accessories is indicated in the terminal block datasheet including end stops.
Some accessories such as jumper bars may modify the terminal block's ratings: Complete information available in the accessories section of the catalog.

3

1SNK161022S0201

Technical data valid for copper conductors only.

ZS95-PE screw clamp terminal blocks
Ground - 26 mm 1.024 in spacing

95 mm²
0000 AWG

Description

Reliable electrical and mechanical contact with the rail that exceeds the requirements of IEC 60947-7-2 terminal block standard.

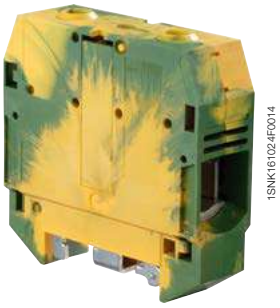

ZS95-PE

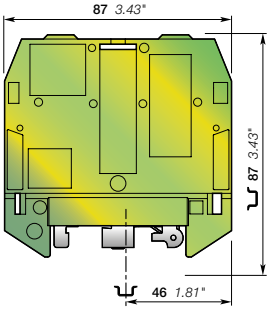

26 mm 1.024 in spacing

Ordering details

Description		Color	Type	Part Number		Pkg qty	Weight (1 pce) g
Ground	Screw rail connection	Green-yellow	ZS95-PE	1SNK526150R0000		10	278.00

Main technical data

Connecting capacity		IEC	UL - CSA
1 conductor per clamp	Rigid - Solid / Stranded	35 ... 120 mm²	2 ... 0000 AWG
	Flexible	35 ... 95 mm²	
	with non insulated ferrule	35 ... 50 mm²	
	with insulated ferrule	35 ... 50 mm²	
	Gauge	B12	
Rated cross section		95 mm²	0000 AWG
Rated short-time withstand current (1s)		11400 A	12840 A
Protection		IP10	NEMA 1
Explosive atmosphere classification		IM2 II 2 GD Ex eb I/II/IIIC – Class I, Zone 1, AEx e II, Ex e II U	

Mounting instructions

Rail	TH 35-15
Wire stripping length	26 mm 1.024 in
Tool Screw clamp	Allen key Ø 6 mm Ø 0.236 in
Rail connection screw	Ø 4 Ø 0.158
Torque Screw clamp	9.25 Nm ± 0.25 81.7 lb.in ± 2.2
Rail connection screw	1.9 Nm ± 0.1 Nm 16.82 lb.in ± 0.885 lb.in

The connecting capacity data for one Rigid - Solid / Stranded - Flexible conductor (when applicable) is a mandatory information required by IEC, UL and CSA standards (Copper conductors). All other data are provided as supplementary information only. For more details, please consult our CB, UL or CSA certificates and technical datasheet available on http://www.TE.com

CE, CB, RoHS, USR CNR, CSA, EAC Ex, ATEX, IECEx, BR-Ex e II, Haz Loc, BV, DNV, Rina

Accessories

	Description			Color	Type	Part Number		Pkg qty	Weight (1 pce) g
1	**End stops**	10 mm	0.394 in	Dark grey	BAZH1	1SNK900102R0000		20	24.00
2	**Terminal block markers**	Blank marker		White	MG-CPM 13 41791	1SNB041791R0612		1680	0.27
		Blank card			MC812	1SNK160000R0000		22	10.00
					MC812PA	1SNK169999R0000		20	14.00
		Universal wire markers holder		Grey	UMH	1SNK900611R0000		10	0.20

Complete list of accessories is indicated in the terminal block datasheet including end stops.
Some accessories such as jumper bars may modify the terminal block's ratings: Complete information available in the accessories section of the catalog.

1SNK161024S0201

Technical data valid for copper conductors only.

ZS4-S screw clamp terminal blocks

Disconnect with blade - 5.2 mm 0.205 in spacing

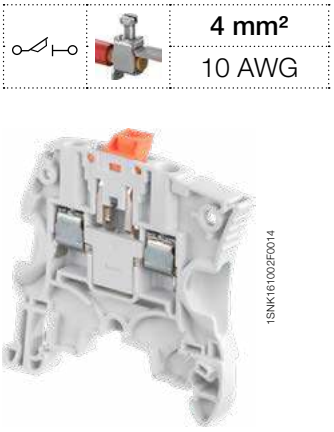

4 mm²
10 AWG

Description

- Ease your disconnect operations with the disconnect blade operated by hand or with a screwdriver,
- Same profile as ZS4 feed-through terminal block for aligned marking and identical end section use.

ZS4-S

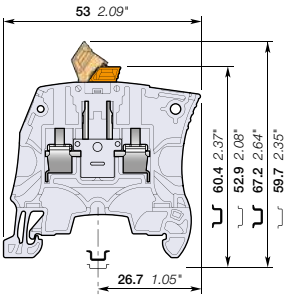

5.2 mm 0.205 in spacing

Ordering details

Description		Color	Type	Part Number		Pkg qty	Weight (1 pce) g
Disconnect	Profile aligned with ZS4	Grey	ZS4-S	1SNK505310R0000		50	8.60
		Blue	ZS4-S-BL	1SNK505320R0000		50	8.60
		Orange	ZS4-S-OR	1SNK505330R0000		50	8.60

Main technical data

Connecting capacity		IEC	UL - CSA
1 conductor per clamp	Rigid - Solid / Stranded	0.2 ... 4 mm²	24 ... 10 AWG
	Flexible	0.2 ... 4 mm²	
	with non insulated ferrule	0.22 ... 4 mm²	24 ... 10 AWG
	with insulated ferrule	0.22 ... 2.5 mm²	24 ... 14 AWG
	Gauge	A3-B3	
2 conductors per clamp	Rigid - Solid / Stranded	0.2 ... 1.5 mm²	24 ... 16 AWG
	Flexible	0.2 ... 1.5 mm²	
	with twin ferrule	0.22 ... 1.5 mm²	24 ... 16 AWG
Rated current / Rated cross section		25 A / 4 mm²	25 A / 10 AWG
Rated short-time withstand current (1s)		480 A	
Rated voltage		400 V	150 V
Impulse withstand voltage		6000 V	
Protection		IP20	NEMA 1

Mounting instructions

Rail		TH 35-7.5, TH 35-15
Wire stripping length		10.5 mm 0.412 in
Tool		Flat screwdriver Ø 3.5 mm Ø 0.138 in
Torque		0.6 Nm ± 0.1 5.31 lb.in ± 0.885

Recommendation for best usage: in horizontal assemblies, disconnect terminal blocks should be mounted with fixed foot on top (power side) so that the disconnect knife does not partially close through gravity. Furthermore, as specified per IEC 60947-7-1, disconnect terminal blocks are intended to be used for temporary disconnection at zero potential and at no load.

The connecting capacity data for one Rigid - Solid / Stranded - Flexible conductor (when applicable) is a mandatory information required by IEC, UL and CSA standards (Copper conductors). All other data are provided as supplementary information only. For more details, please consult our CB, UL or CSA certificates and technical datasheet available on http://www.TE.com

CE | CB | RoHS | USR CNR | CSA | EAC | BV | DNV | Rina

Accessories

	Description			Color	Type	Part Number		Pkg qty	Weight (1 pce) g
1	**End stops**	10 mm	0.394 in	Dark grey	BAM4	1SNK900001R0000		50	14.00
2	**End sections**	2.2 mm	0.087 in	Dark grey	ES4	1SNK505910R0000		20	2.20
3	**Lateral jumper bars**	2 poles	30 A (IEC)	Grey	PC5-2	1SNA113542R1000		10	1.80
		10 poles	30 A (IEC)		PC5-10	1SNA113544R1200		10	6.00
4	**Circuit separators**	3 mm	0.118 in	Dark grey	CS-R1	1SNK900103R0000		20	5.20
5	**Shield connectors**				SHBS	1SNK900600R0000		20	3.50
6	**Protecting covers**	5.2 mm 0.205 in spacing		Transparent	PL5	1SNK900618R0000		10	1.50
7	**Terminal block markers**	Blank marker		White	MG-CPM 13 41790	1SNB041790R0512		1960	0.23
		Blank card			MC512	1SNK140000R0000		22	9.00
					MC512PA	1SNK149999R0000		20	10.00
		Universal wire markers holder		Grey	UMH	1SNK900611R0000		10	0.20

Complete list of accessories is indicated in the terminal block datasheet including end stops.
Some accessories such as jumper bars may modify the terminal block's ratings: Complete information available in the accessories section of the catalog.

3

1SNK161010S0201

Technical data valid for copper conductors only.

ZS4-S-T screw clamp terminal blocks

Disconnect with blade - with test socket - 5.2 mm 0.205 in spacing

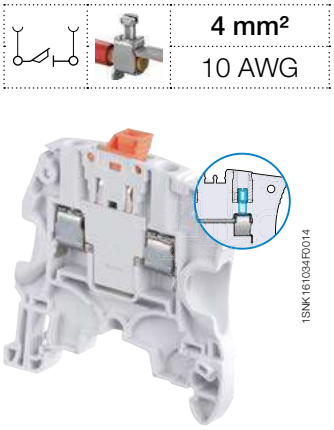

4 mm²	
10 AWG	

ZS4-S-T

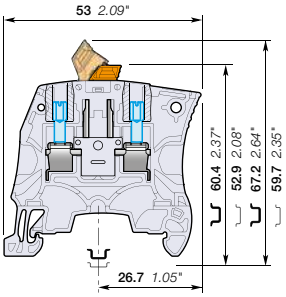

5.2 mm 0.205 in spacing

Description

- Ease your test operations with the 2 built-in test sockets,
- Screwdriver or hand operated disconnect blade,
- Same profile as ZS4 feed-through terminal block for aligned marking and identical end section use.

Ordering details

Description		Color	Type	Part Number		Pkg qty	Weight (1 pce) g
Disconnect	Profile aligned with ZS4, with 2 test sockets DIA 2 mm 0.079 in	Grey	ZS4-S-T2	1SNK505311R0000		50	8.90
		Blue	ZS4-S-T2-BL	1SNK505321R0000		50	8.90
		Orange	ZS4-S-T2-OR	1SNK505331R0000		50	8.90
	Profile aligned with ZS4, with 2 test sockets DIA 2.3 mm 0.091 in	Grey	ZS4-S-T2.3	1SNK505312R0000		50	8.80

Main technical data

Connecting capacity		IEC	UL - CSA
1 conductor per clamp	Rigid - Solid / Stranded	0.2 ... 4 mm²	24 ... 10 AWG
	Flexible	0.22 ... 4 mm²	
	with non insulated ferrule	0.22 ... 4 mm²	24 ... 10 AWG
	with insulated ferrule	0.22 ... 2.5 mm²	24 ... 14 AWG
	Gauge	A3-B3	
2 conductors per clamp	Rigid - Solid / Stranded	0.2 ... 1.5 mm²	24 ... 16 AWG
	Flexible	0.2 ... 1.5 mm²	
	with twin ferrule	0.22 ... 1.5 mm²	24 ... 16 AWG
Rated current / Rated cross section		25 A / 4 mm²	25 A / 10 AWG
Rated short-time withstand current (1s)		480 A	
Rated voltage		400 V	150 V
Impulse withstand voltage		6000 V	
Protection		IP20	NEMA 1

Mounting instructions

Rail		TH 35-7.5, TH 35-15
Wire stripping length		10.5 mm 0.412 in
Tool		Flat screwdriver Ø 3.5 mm Ø 0.138 in
Torque		0.6 Nm ± 0.1 5.31 lb.in ± 0.885

Recommendation for best usage: in horizontal assemblies, disconnect terminal blocks should be mounted with fixed foot on top (power side) so that the disconnect knife does not partially close through gravity. Furthermore, as specified per IEC 60947-7-1, disconnect terminal blocks are intended to be used for temporary disconnection at zero potential and at no load.

The connecting capacity data for one Rigid - Solid / Stranded - Flexible conductor (when applicable) is a mandatory information required by IEC, UL and CSA standards (Copper conductors). All other data are provided as supplementary information only. For more details, please consult our CB, UL or CSA certificates and technical datasheet available on http://www.TE.com

CE RoHS USR CNR CSA EAC

Accessories

	Description			Color	Type	Part Number		Pkg qty	Weight (1 pce) g
1	**End stops**	10 mm	0.394 in	Dark grey	BAM4	1SNK900001R0000		50	14.00
2	**End sections**	2.2 mm	0.087 in	Dark grey	ES4	1SNK505910R0000		20	2.20
3	**Lateral jumper bars**	2 poles	30 A (IEC)	Grey	PC5-2	1SNA113542R1000		10	1.80
		10 poles	30 A (IEC)		PC5-10	1SNA113544R1200		10	6.00
4	**Circuit separators**	3 mm	0.118 in	Dark grey	CS-R1	1SNK900103R0000		20	5.20
5	**Shield connectors**				SHBS	1SNK900600R0000		20	3.50
6	**Protecting covers**	5.2 mm 0.205 in spacing		Transparent	PL5	1SNK900618R0000		10	1.50
7	**Terminal block markers**	Blank marker		White	MG-CPM 13 41790	1SNB041790R0512		1960	0.23
		Blank card			MC512	1SNK140000R0000		22	9.00
					MC512PA	1SNK149999R0000		20	10.00
		Universal wire markers holder		Grey	UMH	1SNK900611R0000		10	0.20

Complete list of accessories is indicated in the terminal block datasheet including end stops.
Some accessories such as jumper bars may modify the terminal block's ratings: Complete information available in the accessories section of the catalog.

1SNK161042S0201

Technical data valid for copper conductors only.

ZS4-S-R1 screw clamp terminal blocks

Disconnect with blade - 6 mm 0.236 in spacing

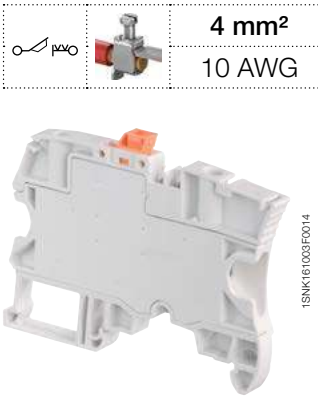

4 mm²	
10 AWG	

1SNK161003F0014

ZS4-S-R1

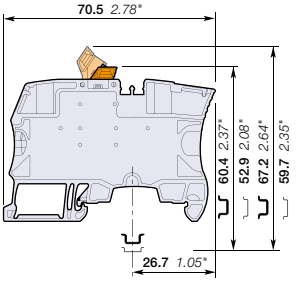

6 mm 0.236 in spacing

Description

- Simplify the alternated distribution thanks to the two jumper channels aligned with ZS4 feed-through terminal blocks,
- Ease your disconnect operations with the disconnect blade operated by hand or with a screwdriver.

Ordering details

Description		Color	Type	Part Number		Pkg qty	Weight (1 pce) g
Disconnect	Profile aligned with ZS4-SF	Grey	ZS4-S-R1	1SNK506310R0000		50	13.20
		Blue	ZS4-S-R1-BL	1SNK506320R0000		50	13.20
		Orange	ZS4-S-R1-OR	1SNK506330R0000		50	13.20

Main technical data

Connecting capacity		IEC	UL - CSA
1 conductor per clamp	Rigid - Solid / Stranded	0.2 ... 4 mm²	24 ... 10 AWG
	Flexible	0.22 ... 4 mm²	
	with non insulated ferrule	0.22 ... 4 mm²	24 ... 12 AWG
	with insulated ferrule	0.22 ... 4 mm²	24 ... 12 AWG
	Gauge	A3-B3	
2 conductors per clamp	Rigid - Solid / Stranded	0.2 ... 1.5 mm²	24 ... 16 AWG
	Flexible	0.2 ... 1.5 mm²	
	with twin ferrule	0.22 ... 1.5 mm²	24 ... 16 AWG
Rated current / Rated cross section		26 A / 4 mm²	26 A / 10 AWG
Rated short-time withstand current (1s)		480 A	
Rated voltage		400 V	150 V
Impulse withstand voltage		6000 V	
Protection		IP20	NEMA 1

Mounting instructions

Rail	TH 35-7.5, TH 35-15
Wire stripping length	10.5 mm 0.412 in
Tool	Flat screwdriver Ø 3.5 mm Ø 0.138 in
Torque	0.6 Nm ± 0.1 5.31 lb.in ± 0.885

Recommendation for best usage: in horizontal assemblies, disconnect terminal blocks should be mounted with fixed foot on top (power side) so that the disconnect knife does not partially close through gravity. Furthermore, as specified per IEC 60947-7-1, disconnect terminal blocks are intended to be used for temporary disconnection at zero potential and at no load.

The connecting capacity data for one Rigid - Solid / Stranded - Flexible conductor (when applicable) is a mandatory information required by IEC, UL and CSA standards (Copper conductors). All other data are provided as supplementary information only. For more details, please consult our CB, UL or CSA certificates and technical datasheet available on http://www.TE.com

CE | CB | RoHS | USR CNR | CSA | EAC | BV | DNV | Rina

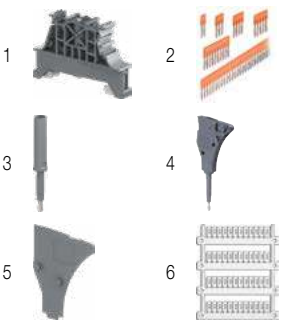

Accessories

	Description			Color	Type	Part Number		Pkg qty	Weight (1 pce) g
1	**End stops**	10 mm	0.394 in	Dark grey	BAM4	1SNK900001R0000		50	14.00
2	**Jumper bars**	2 poles	41 A (IEC)	Orange	JB6-2	1SNK906302R0000		50	1.30
		3 poles	41 A (IEC)		JB6-3	1SNK906303R0000		50	2.10
		4 poles	41 A (IEC)		JB6-4	1SNK906304R0000		50	2.90
		5 poles	41 A (IEC)		JB6-5	1SNK906305R0000		50	3.60
		10 poles	41 A (IEC)		JB6-10	1SNK906310R0000		20	7.40
3	**Test adapters**	For test plugs DIA 2 mm 0.079 in		Dark grey	TP2	1SNK900203R0000		20	1.70
		For test plugs DIA 4 mm 0.157 in			TP4	1SNK900205R0000		20	2.40
4	**Test connectors**	End module, 5.2 mm 0.205 in		Dark grey	TC5-R1	1SNK900201R0000		10	5.20
5	**Spacers**	0.8 mm	0.031 in	Dark grey	ES-TC6	1SNK900105R0000		10	0.80
6	**Terminal block markers**	Blank marker		White	MG-CPM 13 41791	1SNB041791R0612		1680	0.27
		Blank card			MC612	1SNK150000R0000		22	10.00
					MC612PA	1SNK159999R0000		20	11.00
		Universal wire markers holder		Grey	UMH	1SNK900611R0000		10	0.20

Complete list of accessories is indicated in the terminal block datasheet including end stops.
Some accessories such as jumper bars may modify the terminal block's ratings: Complete information available in the accessories section of the catalog.

1SNK161012S0201

Technical data valid for copper conductors only.

ZS4-S-T-R1 screw clamp terminal blocks

Disconnect with blade - with test socket - 6 mm 0.236 in spacing

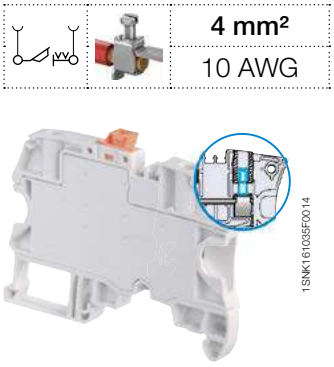

4 mm²
10 AWG

1SNK161035F0014

ZS4-S-T-R1

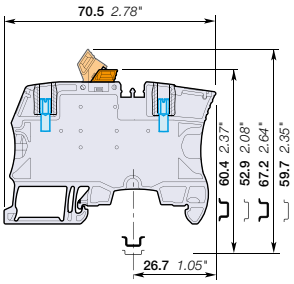

6 mm 0.236 in spacing

Description

- Ease your test operations with the 2 built-in test sockets,
- Screwdriver or hand operated disconnect blade,
- Simplify the alternated distribution thanks to the two jumper channels aligned with ZS4 feed-through terminal blocks.

Ordering details

Description		Color	Type	Part Number		Pkg qty	Weight (1 pce) g
Disconnect	Profile aligned with ZS4-SF, with 2 test sockets DIA 2 mm 0.079 in	Grey	ZS4-S-T2-R1	1SNK506311R0000		50	14.20
		Blue	ZS4-S-T2-R1-BL	1SNK506321R0000		50	14.20
		Orange	ZS4-S-T2-R1-OR	1SNK506331R0000		50	14.20
	Profile aligned with ZS4-SF, with 2 test sockets DIA 2.3 mm 0.091 in	Grey	ZS4-S-T2.3-R1	1SNK506312R0000		50	14.20

Main technical data

Connecting capacity		IEC	UL - CSA
1 conductor per clamp	Rigid - Solid / Stranded	0.2 ... 4 mm²	24 ... 10 AWG
	Flexible	0.22 ... 4 mm²	
	with non insulated ferrule	0.22 ... 4 mm²	24 ... 12 AWG
	with insulated ferrule	0.22 ... 4 mm²	24 ... 12 AWG
	Gauge	A3-B3	
2 conductors per clamp	Rigid - Solid / Stranded	0.2 ... 1.5 mm²	24 ... 16 AWG
	Flexible	0.2 ... 1.5 mm²	
	with twin ferrule	0.22 ... 1.5 mm²	24 ... 16 AWG
Rated current / Rated cross section		26 A / 4 mm²	26 A / 10 AWG
Rated short-time withstand current (1s)		480 A	
Rated voltage		400 V	150 V
Impulse withstand voltage		6000 V	
Protection		IP20	NEMA 1

Mounting instructions

Rail	TH 35-7.5, TH 35-15
Wire stripping length	10.5 mm 0.412 in
Tool	Flat screwdriver Ø 3.5 mm Ø 0.138 in
Torque	0.6 Nm ± 0.1 5.31 lb.in ± 0.885

Recommendation for best usage: in horizontal assemblies, disconnect terminal blocks should be mounted with fixed foot on top (power side) so that the disconnect knife does not partially close through gravity. Furthermore, as specified per IEC 60947-7-1, disconnect terminal blocks are intended to be used for temporary disconnection at zero potential and at no load.

The connecting capacity data for one Rigid - Solid / Stranded - Flexible conductor (when applicable) is a mandatory information required by IEC, UL and CSA standards (Copper conductors). All other data are provided as supplementary information only. For more details, please consult our CB, UL or CSA certificates and technical datasheet available on http://www.TE.com

CE | CB | RoHS | USR CNR | CSA | EAC | BV | DNV | Rina

Accessories

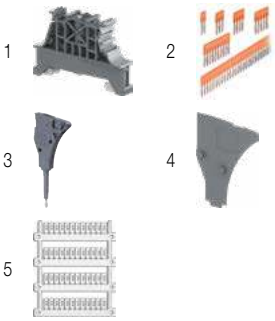

	Description			Color	Type	Part Number		Pkg qty	Weight (1 pce) g
1	**End stops**	10 mm	0.394 in	Dark grey	BAM4	1SNK900001R0000		50	14.00
2	**Jumper bars**	2 poles	41 A (IEC)	Orange	JB6-2	1SNK906302R0000		50	1.30
		3 poles	41 A (IEC)		JB6-3	1SNK906303R0000		50	2.10
		4 poles	41 A (IEC)		JB6-4	1SNK906304R0000		50	2.90
		5 poles	41 A (IEC)		JB6-5	1SNK906305R0000		50	3.60
		10 poles	41 A (IEC)		JB6-10	1SNK906310R0000		20	7.40
3	**Test connectors**	End module, 5.2 mm 0.205 in		Dark grey	TC5-R1	1SNK900201R0000		10	5.20
4	**Spacers**	0.8 mm	0.031 in	Dark grey	ES-TC6	1SNK900105R0000		10	0.80
5	**Terminal block markers**	Blank marker		White	MG-CPM 13 41791	1SNB041791R0612		1680	0.27
		Blank card			MC612	1SNK150000R0000		22	10.00
					MC612PA	1SNK159999R0000		20	11.00
		Universal wire markers holder		Grey	UMH	1SNK900611R0000		10	0.20

Complete list of accessories is indicated in the terminal block datasheet including end stops.
Some accessories such as jumper bars may modify the terminal block's ratings: Complete information available in the accessories section of the catalog.

1SNK161045S0201

Technical data valid for copper conductors only.

ZS6-S screw clamp terminal blocks

Disconnect with blade - 6 mm 0.236 in spacing

6 mm²
10 AWG

ZS6-S

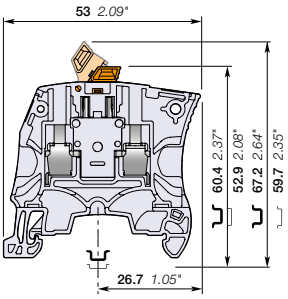

6 mm 0.236 in spacing

Description

- Ease your disconnect operations with the disconnect blade operated by hand or with a screwdriver,
- Same profile as ZS6 feed-through terminal block for aligned marking and identical end section use.

Ordering details

Description		Color	Type	Part Number		Pkg qty	Weight (1 pce) g
Disconnect	Profile aligned with ZS6	Grey	ZS6-S	1SNK506315R0000		50	8.60
		Blue	ZS6-S-BL	1SNK506322R0000		50	8.60

Main technical data

Connecting capacity		IEC	UL - CSA
1 conductor per clamp	Rigid - Solid / Stranded	0.2 ... 6 mm²	24 ... 10 AWG
	Flexible	0.22 ... 6 mm²	
	with non insulated ferrule	0.22 ... 6 mm²	24 ... 12 AWG
	with insulated ferrule	0.22 ... 4 mm²	24 ... 12 AWG
	Gauge	A4-B3	
2 conductors per clamp	Rigid - Solid / Stranded	0.2 ... 2.5 mm²	24 ... 14 AWG
	Flexible	0.22 ... 2.5 mm²	
	with twin ferrule	0.22 ... 2.5 mm²	24 ... 14 AWG
Rated current / Rated cross section		25 A / 4 mm²	25 A / 10 AWG
Maximum current / Maximum cross section		30 A / 6 mm²	
Rated short-time withstand current (1s)		480 A	
Rated voltage		500 V	300 V
Impulse withstand voltage		6000 V	
Protection		IP20	NEMA 1

Mounting instructions

Rail	TH 35-7.5, TH 35-15
Wire stripping length	10.5 mm 0.412 in
Tool	Flat screwdriver Ø 4 mm Ø 0.157 in
Torque	0.85 Nm ± 0.15 7.52 lb.in ± 1.33

Recommendation for best usage: in horizontal assemblies, disconnect terminal blocks should be mounted with fixed foot on top (power side) so that the disconnect knife does not partially close through gravity. Furthermore, as specified per IEC 60947-7-1, disconnect terminal blocks are intended to be used for temporary disconnection at zero potential and at no load.

The connecting capacity data for one Rigid - Solid / Stranded - Flexible conductor (when applicable) is a mandatory information required by IEC, UL and CSA standards (Copper conductors). All other data are provided as supplementary information only. For more details, please consult our CB, UL or CSA certificates and technical datasheet available on http://www.TE.com

CE CB RoHS USR CSA EAC BV DNV

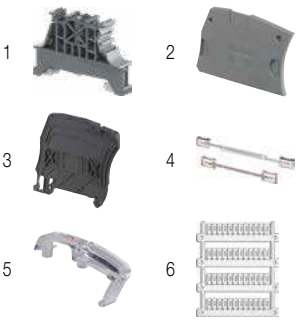

Accessories

	Description			Color	Type	Part Number		Pkg qty	Weight (1 pce) g
1	**End stops**	10 mm	0.394 in	Dark grey	BAM4	1SNK900001R0000		50	14.00
2	**End sections**	2.2 mm	0.087 in	Dark grey	ES4	1SNK505910R0000		20	2.20
3	**Circuit separators**	3 mm	0.118 in	Dark grey	CS-R1	1SNK900103R0000		20	5.20
4	**Shield connectors**				SHBS	1SNK900600R0000		20	3.50
5	**Protecting covers**	6 mm 0.236 in spacing		Transparent	PL6	1SNK900619R0000		10	1.80
6	**Terminal block markers**	Blank marker		White	MG-CPM 13 41791	1SNB041791R0612		1680	0.27
		Blank card			MC612	1SNK150000R0000		22	10.00
					MC612PA	1SNK159999R0000		20	11.00
		Universal wire markers holder		Grey	UMH	1SNK900611R0000		10	0.20

Complete list of accessories is indicated in the terminal block datasheet including end stops.
Some accessories such as jumper bars may modify the terminal block's ratings: Complete information available in the accessories section of the catalog.

3

1SNK161046S0201

Technical data valid for copper conductors only.

ZS6-S-4S-T screw clamp terminal blocks

Disconnect with blade - with test socket screws - 6 mm 0.236 in spacing

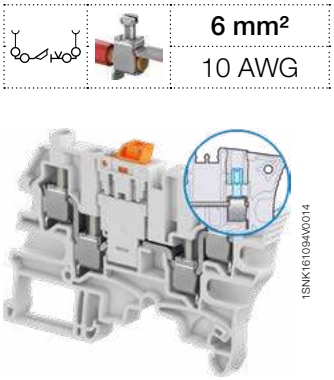

6 mm²
10 AWG

ZS6-S-4S-T

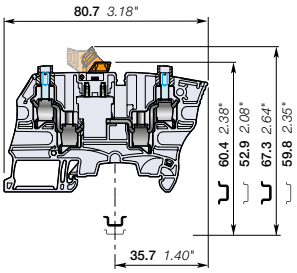

6 mm 0.236 in spacing

Description

- Recommended for energy markets and highly demanding applications requiring that only one conductor be connected per clamp,
- Ease your disconnect and test operations with the two built-in test socket screws,
- Simplify the alternated distribution thanks to the jumper channel.

Ordering details

Description		Color	Type	Part Number		Pkg qty	Weight (1 pce) g
Disconnect	with 2 test sockets DIA 2 mm 0,079 in	Grey	ZS6-S-4S-T2	1SNK506316R0000		50	18.40

Main technical data

Connecting capacity		IEC	UL - CSA
1 conductor per clamp	Rigid - Solid / Stranded	0.2 ... 6 mm²	24 ... 10 AWG
	Flexible	0.22... 6 mm²	
	with non insulated ferrule	0.22 ... 4 mm²	24 ... 12 AWG
	with insulated ferrule	0.22 ... 4 mm²	24 ... 12 AWG
	Gauge	A4-B3	
2 conductors per clamp	Rigid - Solid / Stranded	0.2 ... 2.5 mm²	24 ... 14 AWG
	Flexible	0.2 ... 2.5 mm²	
	with twin ferrule	0.22 ... 2.5 mm²	24 ... 14 AWG
Rated current / Rated cross section		27 A / 4 mm²	28 A / 10 AWG
Rated short-time withstand current (1s)		480 A	
Rated voltage		500 V	300 V
Impulse withstand voltage		6000 V	
Protection		IP20	NEMA 1

Mounting instructions

Rail	TH 35-7.5, TH 35-15
Wire stripping length	10.5 mm 0.413 in
Tool	Flat screwdriver Ø 4 mm Ø 0.157 in
Torque	0.85 Nm ± 0.15 7.52 lb.in ± 1.33

Recommendation for best usage: in horizontal assemblies, disconnect terminal blocks should be mounted with fixed foot on top (power side) so that the disconnect knife does not partially close through gravity. Furthermore, as specified per IEC 60947-7-1, disconnect terminal blocks are intended to be used for temporary disconnection at zero potential and at no load.

The connecting capacity data for one Rigid - Solid / Stranded - Flexible conductor (when applicable) is a mandatory information required by IEC, UL and CSA standards (Copper conductors). All other data are provided as supplementary information only. For more details, please consult our CB, UL or CSA certificates and technical datasheet available on http://www.TE.com

CE CB RoHS USR CSA EAC BV DNV

Accessories

	Description			Color	Type	Part Number		Pkg qty	Weight (1 pce) g
1	**End stops**	10 mm	0.394 in	Dark grey	BAM4	1SNK900001R0000		50	14.00
2	**End sections**	2.2 mm	0.087 in	Dark grey	ES6-4S	1SNK505911R0000		20	3.10
3	**Jumper bars**	2 poles	41 A (IEC)	Orange	JB6-2	1SNK906302R0000		50	1.30
		3 poles	41 A (IEC)		JB6-3	1SNK906303R0000		50	2.10
		4 poles	41 A (IEC)		JB6-4	1SNK906304R0000		50	2.90
		5 poles	41 A (IEC)		JB6-5	1SNK906305R0000		50	3.60
		10 poles	41 A (IEC)		JB6-10	1SNK906310R0000		20	7.40
4	**Circuit separators**	3 mm	0.118 in	Dark grey	CS-R1	1SNK900103R0000		20	5.20
5	**Test adapters**	For test plugs DIA 2 mm 0.079 in		Dark grey	TP2	1SNK900203R0000		20	1.70
		For test plugs DIA 4 mm 0.157 in			TP4	1SNK900205R0000		20	2.40
6	**Test connectors**	End module, 5.2 mm 0.205 in		Dark grey	TC5-R1	1SNK900201R0000		10	5.20
7	**Spacers**	0.8 mm	0.031 in	Dark grey	ES-TC6	1SNK900105R0000		10	0.80
8	**Terminal block markers**	Blank marker		White	MG-CPM 13 41791	1SNB041791R0612		1680	0.27
		Blank card			MC612	1SNK150000R0000		22	10.00
					MC612PA	1SNK159999R0000		20	11.00
		Universal wire markers holder		Grey	UMH	1SNK900611R0000		10	0.20

Complete list of accessories is indicated in the terminal block datasheet including end stops.
Some accessories such as jumper bars may modify the terminal block's ratings: Complete information available in the accessories section of the catalog.

1SNK161071S0201

Technical data valid for copper conductors only.

ZS10-S screw clamp terminal blocks

Disconnect with blade - 8 mm 0.315 in spacing

ZS10-S

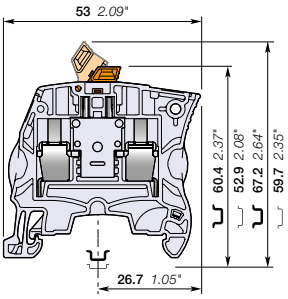

8 mm 0.315 in spacing

		10 mm²
		6 AWG

Description

- Ease your disconnect operations with the disconnect blade operated by hand or with a screwdriver,
- Same profile as ZS10 feed-through terminal block for aligned marking and identical end section use.

Ordering details

Description		Color	Type	Part Number		Pkg qty	Weight (1 pce) g
Disconnect	Profile aligned with ZS10	Grey	ZS10-S	1SNK508315R0000		50	8.60
		Blue	ZS10-S-BL	1SNK508320R0000		50	8.60

Main technical data

Connecting capacity		IEC	UL - CSA
1 conductor per clamp	Rigid - Solid / Stranded	0.2 ... 10 mm²	24 ... 6 AWG
	Flexible	0.22 ... 10 mm²	
	with non insulated ferrule	0.22 ... 10 mm²	24 ... 12 AWG
	with insulated ferrule	0.22 ... 6 mm²	24 ... 12 AWG
	Gauge	A5-B5	
2 conductors per clamp	Rigid - Solid / Stranded	0.5 ... 4 mm²	20 ... 12 AWG
	Flexible	0.5 ... 4 mm²	
	with twin ferrule	0.5 ... 4 mm²	20 ... 12 AWG
Rated current / Rated cross section		25 A / 4 mm²	25 A / 6 AWG
Maximum current / Maximum cross section		42 A / 10 mm²	
Rated short-time withstand current (1s)		480 A	
Rated voltage		630 V	300 V
Impulse withstand voltage		6000 V	
Protection		IP20	NEMA 1

Mounting instructions

Rail	TH 35-7.5, TH 35-15
Wire stripping length	12 mm 0.472 in
Tool	Flat screwdriver Ø 4 mm Ø 0.157 in
Torque	1.3 Nm ± 0.3 11.5 lb.in ± 2.65

Recommendation for best usage: in horizontal assemblies, disconnect terminal blocks should be mounted with fixed foot on top (power side) so that the disconnect knife does not partially close through gravity. Furthermore, as specified per IEC 60947-7-1, disconnect terminal blocks are intended to be used for temporary disconnection at zero potential and at no load.

The connecting capacity data for one Rigid - Solid / Stranded - Flexible conductor (when applicable) is a mandatory information required by IEC, UL and CSA standards (Copper conductors). All other data are provided as supplementary information only. For more details, please consult our CB, UL or CSA certificates and technical datasheet available on http://www.TE.com

CE CB RoHS USR CSA EAC BV DNV

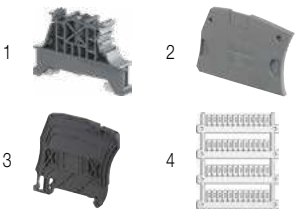

Accessories

	Description			Color	Type	Part Number		Pkg qty	Weight (1 pce) g
1	**End stops**	10 mm	0.394 in	Dark grey	BAM4	1SNK900001R0000		50	14.00
2	**End sections**	2.2 mm	0.087 in	Dark grey	ES4	1SNK505910R0000		20	2.20
3	**Circuit separators**	3 mm	0.118 in	Dark grey	CS-R1	1SNK900103R0000		20	5.20
4	**Terminal block markers**	Blank marker		White	MG-CPM 13 41791	1SNB041791R0612		1680	0.27
		Blank card			MC812	1SNK160000R0000		22	10.00
					MC812PA	1SNK169999R0000		20	14.00
		Universal wire markers holder		Grey	UMH	1SNK900611R0000		10	0.20

Complete list of accessories is indicated in the terminal block datasheet including end stops.
Some accessories such as jumper bars may modify the terminal block's ratings: Complete information available in the accessories section of the catalog.

1SNK161050S0201

Technical data valid for copper conductors only.

ZS4-SP screw clamp terminal blocks

Disconnect with plug - 5.2 mm 0.205 in spacing

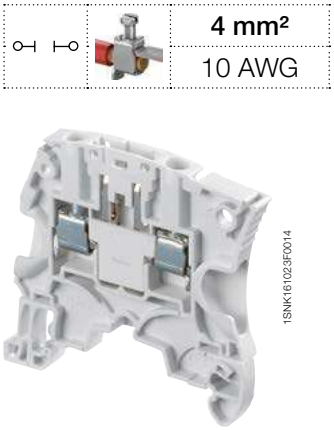

4 mm²	
10 AWG	

Description

- Save time with our screwless component holder plug,
- Same profile as ZS4 feed-through terminal block for aligned marking and identical end section use.

1SNK161023F0014

ZS4-SP

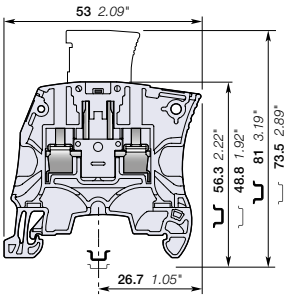

5.2 mm 0.205 in spacing

Ordering details

Description		Color	Type	Part Number		Pkg qty	Weight (1 pce) g
Disconnect	Profile aligned with ZS4, plug delivered separetely	Grey	ZS4-SP	1SNK505313R0000		50	8.20

Main technical data

Connecting capacity		IEC	UL - CSA
1 conductor per clamp	Rigid - Solid / Stranded	0.2 ... 4 mm²	24 ... 10 AWG
	Flexible	0.22 ... 4 mm²	
	with non insulated ferrule	0.22 ... 4 mm²	24 ... 10 AWG
	with insulated ferrule	0.22 ... 2.5 mm²	24 ... 14 AWG
	Gauge	A3-B3	
2 conductors per clamp	Rigid - Solid / Stranded	0.2 ... 1.5 mm²	24 ... 16 AWG
	Flexible	0.2 ... 1.5 mm²	
	with twin ferrule	0.22 ... 1.5 mm²	24 ... 16 AWG
Rated current / Rated cross section		18 A / 2.5 mm²	18 A / 10 AWG
Rated short-time withstand current (1s)		300 A	
Rated voltage		400 V	150 V
Impulse withstand voltage		6000 V	
Protection		IP20	NEMA 1

Mounting instructions

Rail	TH 35-7.5, TH 35-15
Wire stripping length	10.5 mm 0.412 in
Tool	Flat screwdriver Ø 3.5 mm Ø 0.138 in
Torque	0.6 Nm ± 0.1 5.31 lb.in ± 0.885

The connecting capacity data for one Rigid - Solid / Stranded - Flexible conductor (when applicable) is a mandatory information required by IEC, UL and CSA standards (Copper conductors). All other data are provided as supplementary information only. For more details, please consult our CB, UL or CSA certificates and technical datasheet available on http://www.TE.com

CE RoHS USR CNR CSA EAC

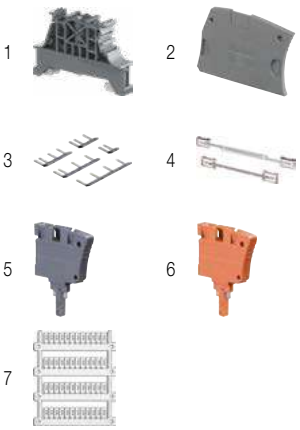

Accessories

	Description			Color	Type	Part Number		Pkg qty	Weight (1 pce) g
1	**End stops**	10 mm	0.394 in	Dark grey	BAM4	1SNK900001R0000		50	14.00
2	**End sections**	2.2 mm	0.087 in	Dark grey	ES4	1SNK505910R0000		20	2.20
3	**Lateral jumper bars**	2 poles	30 A (IEC)	Grey	PC5-2	1SNA113542R1000		10	1.80
		10 poles	30 A (IEC)		PC5-10	1SNA113544R1200		10	6.00
4	**Shield connectors**				SHBS	1SNK900600R0000		20	3.50
5	**Component plugs**	Components in series with circuit		Dark grey	PG5	1SNK900401R0000		20	3.50
6	**Disconnect plugs**	Equipped with linking bar		Orange	PG5-R1	1SNK900402R0000		20	3.50
7	**Terminal block markers**	Blank marker		White	MG-CPM 13 41790	1SNB041790R0512		1960	0.23
		Blank card			MC512	1SNK140000R0000		22	9.00
					MC512PA	1SNK149999R0000		20	10.00
		Universal wire markers holder		Grey	UMH	1SNK900611R0000		10	0.20

Complete list of accessories is indicated in the terminal block datasheet including end stops.
Some accessories such as jumper bars may modify the terminal block's ratings: Complete information available in the accessories section of the catalog.

1SNK161033S0201

Technical data valid for copper conductors only.

ZS4-SP-T2 screw clamp terminal blocks

Disconnect with plug - with test socket - 5.2 mm 0.205 in spacing

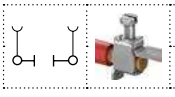

4 mm²
10 AWG

ZS4-SP-T2

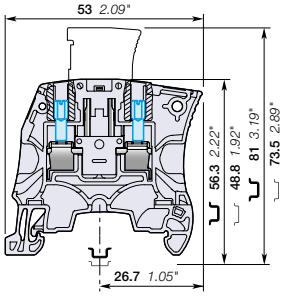

5.2 mm 0.205 in spacing

Description

- Ease your test operations with the 2 built-in test sockets DIA 2 mm 0.079 in,
- Save time with our screwless component holder plug,
- Same profile as ZS4 feed-through terminal block for aligned marking and identical end section use.

Ordering details

Description		Color	Type	Part Number		Pkg qty	Weight (1 pce) g
Disconnect	Profile aligned with ZS4, with 2 test sockets DIA 2 mm 0.079 in, plug delivered separetely	Grey	ZS4-SP-T2	1SNK505314R0000		50	8.40

Main technical data

Connecting capacity		IEC	UL - CSA
1 conductor per clamp	Rigid - Solid / Stranded	0.2 ... 4 mm²	24 ... 10 AWG
	Flexible	0.22 ... 4 mm²	
	with non insulated ferrule	0.22 ... 4 mm²	24 ... 10 AWG
	with insulated ferrule	0.22 ... 2.5 mm²	24 ... 14 AWG
	Gauge	A3-B3	
2 conductors per clamp	Rigid - Solid / Stranded	0.2 ... 1.5 mm²	24 ... 16 AWG
	Flexible	0.2 ... 1.5 mm²	
	with twin ferrule	0.22 ... 1.5 mm²	24 ... 16 AWG
Rated current / Rated cross section		18 A / 2.5 mm²	18 A / 10 AWG
Rated short-time withstand current (1s)		300 A	
Rated voltage		400 V	150 V
Impulse withstand voltage		6000 V	
Protection		IP20	NEMA 1

Mounting instructions

Rail		TH 35-7.5, TH 35-15
Wire stripping length		10.5 mm 0.412 in
Tool		Flat screwdriver Ø 3.5 mm Ø 0.138 in
Torque		0.6 Nm ± 0.1 5.31 lb.in ± 0.885

The connecting capacity data for one Rigid - Solid / Stranded - Flexible conductor (when applicable) is a mandatory information required by IEC, UL and CSA standards (Copper conductors). All other data are provided as supplementary information only. For more details, please consult our CB, UL or CSA certificates and technical datasheet available on http://www.TE.com

CE RoHS USR CNR CSA EAC

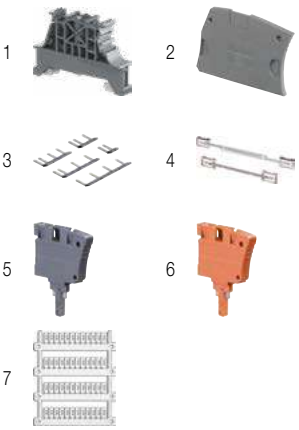

Accessories

	Description			Color	Type	Part Number		Pkg qty	Weight (1 pce) g
1	**End stops**	10 mm	0.394 in	Dark grey	BAM4	1SNK900001R0000		50	14.00
2	**End sections**	2.2 mm	0.087 in	Dark grey	ES4	1SNK505910R0000		20	2.20
3	**Lateral jumper bars**	2 poles	30 A (IEC)	Grey	PC5-2	1SNA113542R1000		10	1.80
		10 poles	30 A (IEC)		PC5-10	1SNA113544R1200		10	6.00
4	**Shield connectors**				SHBS	1SNK900600R0000		20	3.50
5	**Component plugs**	Components in series with circuit		Dark grey	PG5	1SNK900401R0000		20	3.50
6	**Disconnect plugs**	Equipped with linking bar		Orange	PG5-R1	1SNK900402R0000		20	3.50
7	**Terminal block markers**	Blank marker		White	MG-CPM 13 41790	1SNB041790R0512		1960	0.23
		Blank card			MC512	1SNK140000R0000		22	9.00
					MC512PA	1SNK149999R0000		20	10.00
		Universal wire markers holder		Grey	UMH	1SNK900611R0000		10	0.20

Complete list of accessories is indicated in the terminal block datasheet including end stops.
Some accessories such as jumper bars may modify the terminal block's ratings: Complete information available in the accessories section of the catalog.

1SNK161041S0201

Technical data valid for copper conductors only.

ZS4-SP-R1 screw clamp terminal blocks

Disconnect with plug - 6 mm 0.236 in spacing

4 mm²

10 AWG

1SNK161022F0014

ZS4-SP-R1

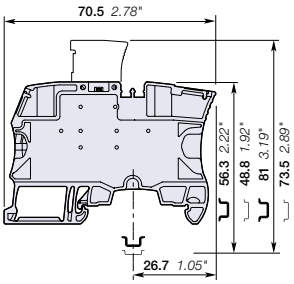

6 mm 0.236 in spacing

Description

- Simplify the alternated distribution between feed-through and disconnect circuits thanks to the two aligned jumper channels,
- Save time with our screwless component holder plug.

Ordering details

Description		Color	Type	Part Number		Pkg qty	Weight (1 pce) g
Disconnect	Profile aligned with ZS4-SF, plug delivered separetely	Grey	ZS4-SP-R1	1SNK506313R0000		50	14.20

Main technical data

Connecting capacity		IEC	UL - CSA
1 conductor per clamp	Rigid - Solid / Stranded	0.2 ... 4 mm²	24 ... 10 AWG
	Flexible	0.22 ... 4 mm²	
	with non insulated ferrule	0.22 ... 4 mm²	24 ... 12 AWG
	with insulated ferrule	0.22 ... 4 mm²	24 ... 12 AWG
	Gauge	A3-B3	
2 conductors per clamp	Rigid - Solid / Stranded	0.2 ... 1.5 mm²	24 ... 16 AWG
	Flexible	0.2 ... 1.5 mm²	
	with twin ferrule	0.22 ... 1.5 mm²	24 ... 16 AWG
Rated current / Rated cross section		18 A / 2.5 mm²	20 A / 10 AWG
Rated short-time withstand current (1s)		300 A	
Rated voltage		400 V	150 V
Impulse withstand voltage		6000 V	
Protection		IP20	NEMA 1

Mounting instructions

Rail	TH 35-7.5, TH 35-15
Wire stripping length	10.5 mm 0.412 in
Tool	Flat screwdriver Ø 3.5 mm Ø 0.138 in
Torque	0.6 Nm ± 0.1 5.31 lb.in ± 0.885

The connecting capacity data for one Rigid - Solid / Stranded - Flexible conductor (when applicable) is a mandatory information required by IEC, UL and CSA standards (Copper conductors). All other data are provided as supplementary information only. For more details, please consult our CB, UL or CSA certificates and technical datasheet available on http://www.TE.com

CE | RoHS | USR CNR | CSA | EAC

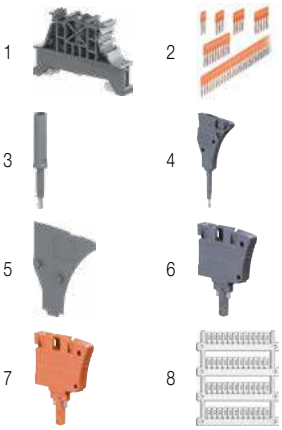

Accessories

	Description			Color	Type	Part Number		Pkg qty	Weight (1 pce) g
1	**End stops**	10 mm	0.394 in	Dark grey	BAM4	1SNK900001R0000		50	14.00
2	**Jumper bars**	2 poles	41 A (IEC)	Orange	JB6-2	1SNK906302R0000		50	1.30
		3 poles	41 A (IEC)		JB6-3	1SNK906303R0000		50	2.10
		4 poles	41 A (IEC)		JB6-4	1SNK906304R0000		50	2.90
		5 poles	41 A (IEC)		JB6-5	1SNK906305R0000		50	3.60
		10 poles	41 A (IEC)		JB6-10	1SNK906310R0000		20	7.40
3	**Test adapters**	For test plugs DIA 2 mm 0.079 in		Dark grey	TP2	1SNK900203R0000		20	1.70
		For test plugs DIA 4 mm 0.157 in			TP4	1SNK900205R0000		20	2.40
4	**Test connectors**	End module, 5.2 mm 0.205 in		Dark grey	TC5-R1	1SNK900201R0000		10	5.20
5	**Spacers**	0.8 mm	0.031 in	Dark grey	ES-TC6	1SNK900105R0000		10	0.80
6	**Component plugs**	Components in series with circuit		Dark grey	PG5	1SNK900401R0000		20	3.50
7	**Disconnect plugs**	Equipped with linking bar		Orange	PG5-R1	1SNK900402R0000		20	3.50
8	**Terminal block markers**	Blank marker		White	MG-CPM 13 41791	1SNB041791R0612		1680	0.27
		Blank card			MC612	1SNK150000R0000		22	10.00
					MC612PA	1SNK159999R0000		20	11.00
		Universal wire markers holder		Grey	UMH	1SNK900611R0000		10	0.20

Complete list of accessories is indicated in the terminal block datasheet including end stops.
Some accessories such as jumper bars may modify the terminal block's ratings: Complete information available in the accessories section of the catalog.

1SNK161039S0201

Technical data valid for copper conductors only.

ZS4-SP-T2-R1 screw clamp terminal blocks

Disconnect with plug - with test socket - 6 mm 0.236 in spacing

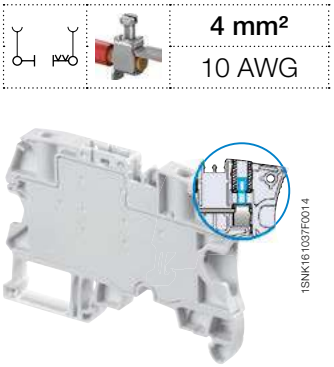

4 mm²
10 AWG

1SNK161037F0014

ZS4-SP-T2-R1

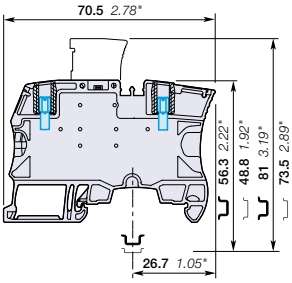

6 mm 0.236 in spacing

Description

- Ease your test operations with the 2 built-in test sockets DIA 2 mm 0.079 in,
- Save time with our screwless component holder plug,
- Simplify the distribution between feed-through and disconnect circuits thanks to the two aligned jumper channels.

Ordering details

Description		Color	Type	Part Number		Pkg qty	Weight (1 pce) g
Disconnect	Profile aligned with ZS4-SF, with 2 test sockets DIA 2 mm 0.079 in, plug delivered separetely	Grey	ZS4-SP-T2-R1	1SNK506314R0000		50	14.20

Main technical data

Connecting capacity		IEC	UL - CSA
1 conductor per clamp	Rigid - Solid / Stranded	0.2 ... 4 mm²	24 ... 10 AWG
	Flexible	0.22 ... 4 mm²	
	with non insulated ferrule	0.22 ... 4 mm²	24 ... 12 AWG
	with insulated ferrule	0.22 ... 4 mm²	24 ... 12 AWG
	Gauge	A3-B3	
2 conductors per clamp	Rigid - Solid / Stranded	0.2 ... 1.5 mm²	24 ... 16 AWG
	Flexible	0.2 ... 1.5 mm²	
	with twin ferrule	0.22 ... 1.5 mm²	24 ... 16 AWG
Rated current / Rated cross section		18 A / 2.5 mm²	20 A / 10 AWG
Rated short-time withstand current (1s)		300 A	
Rated voltage		400 V	150 V
Impulse withstand voltage		6000 V	
Protection		IP20	NEMA 1

Mounting instructions

Rail	TH 35-7.5, TH 35-15
Wire stripping length	10.5 mm 0.412 in
Tool	Flat screwdriver Ø 3.5 mm Ø 0.138 in
Torque	0.6 Nm ± 0.1 5.31 lb.in ± 0.885

The connecting capacity data for one Rigid - Solid / Stranded - Flexible conductor (when applicable) is a mandatory information required by IEC, UL and CSA standards (Copper conductors). All other data are provided as supplementary information only. For more details, please consult our CB, UL or CSA certificates and technical datasheet available on http://www.TE.com

CE RoHS USR CNR CSA EAC

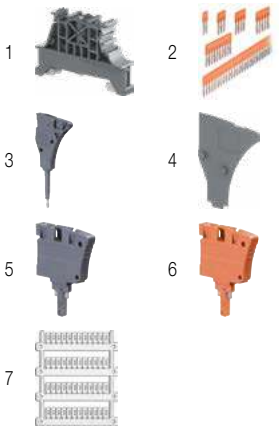

Accessories

	Description			Color	Type	Part Number		Pkg qty	Weight (1 pce) g
1	**End stops**	10 mm	0.394 in	Dark grey	BAM4	1SNK900001R0000		50	14.00
2	**Jumper bars**	2 poles	41 A (IEC)	Orange	JB6-2	1SNK906302R0000		50	1.30
		3 poles	41 A (IEC)		JB6-3	1SNK906303R0000		50	2.10
		4 poles	41 A (IEC)		JB6-4	1SNK906304R0000		50	2.90
		5 poles	41 A (IEC)		JB6-5	1SNK906305R0000		50	3.60
		10 poles	41 A (IEC)		JB6-10	1SNK906310R0000		20	7.40
3	**Test connectors**	End module, 5.2 mm 0.205 in		Dark grey	TC5-R1	1SNK900201R0000		10	5.20
4	**Spacers**	0.8 mm	0.031 in	Dark grey	ES-TC6	1SNK900105R0000		10	0.80
5	**Component plugs**	Components in series with circuit		Dark grey	PG5	1SNK900401R0000		20	3.50
6	**Disconnect plugs**	Equipped with linking bar		Orange	PG5-R1	1SNK900402R0000		20	3.50
7	**Terminal block markers**	Blank marker		White	MG-CPM 13 41791	1SNB041791R0612		1680	0.27
		Blank card			MC612	1SNK150000R0000		22	10.00
					MC612PA	1SNK159999R0000		20	11.00
		Universal wire markers holder		Grey	UMH	1SNK900611R0000		10	0.20

Complete list of accessories is indicated in the terminal block datasheet including end stops.
Some accessories such as jumper bars may modify the terminal block's ratings: Complete information available in the accessories section of the catalog.

1SNK161040S0201

Technical data valid for copper conductors only.

ZS10-SP screw clamp terminal blocks

Disconnect with plug - 8 mm 0.315 in spacing

10 mm²

6 AWG

Description

- Save time with our screwless component holder plug,
- Same profile as ZS10 feed-through terminal block for aligned marking and identical end section use.

1SNK161060F0014

ZS10-SP

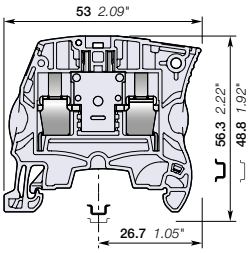

8 mm 0.315 in spacing

Ordering details

Description		Color	Type	Part Number		Pkg qty	Weight (1 pce) g
Disconnect	Profile aligned with ZS10	Grey	ZS10-SP	1SNK508316R0000		50	8.60

Main technical data

Connecting capacity		IEC	UL - CSA
1 conductor per clamp	Rigid - Solid / Stranded	0.2 ... 10 mm²	24 ... 6 AWG
	Flexible	0.22 ... 10 mm²	
	with non insulated ferrule	0.22 ... 10 mm²	24 ... 8 AWG
	with insulated ferrule	0.22 ... 6 mm²	24 ... 8 AWG
	Gauge	A5-B5	
2 conductors per clamp	Rigid - Solid / Stranded	0.5 ... 4 mm²	20 ... 12 AWG
	Flexible	0.5 ... 4 mm²	
	with twin ferrule	0.5 ... 4 mm²	20 ... 12 AWG
Rated current / Rated cross section		18 A / 2.5 mm²	18 A / 6 AWG
Maximum current / Maximum cross section		18 A / 10 mm²	
Rated short-time withstand current (1s)		300 A	
Rated voltage		630 V	300 V
Impulse withstand voltage		6000 V	
Protection		IP20	NEMA 1

Mounting instructions

Rail	TH 35-7.5, TH 35-15
Wire stripping length	12 mm 0.472 in
Tool	Flat screwdriver Ø 4 mm Ø 0.157 in
Torque	1.3 Nm ± 0.3 11.5 lb.in ± 2.65

The connecting capacity data for one Rigid - Solid / Stranded - Flexible conductor (when applicable) is a mandatory information required by IEC, UL and CSA standards (Copper conductors). All other data are provided as supplementary information only. For more details, please consult our CB, UL or CSA certificates and technical datasheet available on http://www.TE.com

CE RoHS USR CSA EAC

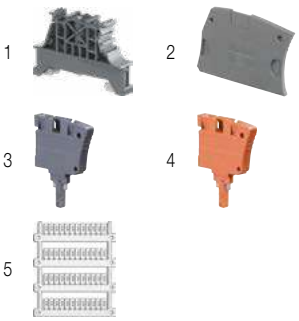

Accessories

	Description			Color	Type	Part Number		Pkg qty	Weight (1 pce) g
1	**End stops**	10 mm	0.394 in	Dark grey	BAM4	1SNK900001R0000		50	14.00
2	**End sections**	2.2 mm	0.087 in	Dark grey	ES4	1SNK505910R0000		20	2.20
3	**Component plugs**	Components in series with circuit		Dark grey	PG5	1SNK900401R0000		20	3.50
4	**Disconnect plugs**	Equipped with linking bar		Orange	PG5-R1	1SNK900402R0000		20	3.50
5	**Terminal block markers**	Blank marker		White	MG-CPM 13 41791	1SNB041791R0612		1680	0.27
		Blank card			MC812	1SNK160000R0000		22	10.00
					MC812PA	1SNK169999R0000		20	14.00
		Universal wire markers holder		Grey	UMH	1SNK900611R0000		10	0.20

Complete list of accessories is indicated in the terminal block datasheet including end stops.
Some accessories such as jumper bars may modify the terminal block's ratings: Complete information available in the accessories section of the catalog.

1SNK161051S0201

Technical data valid for copper conductors only.

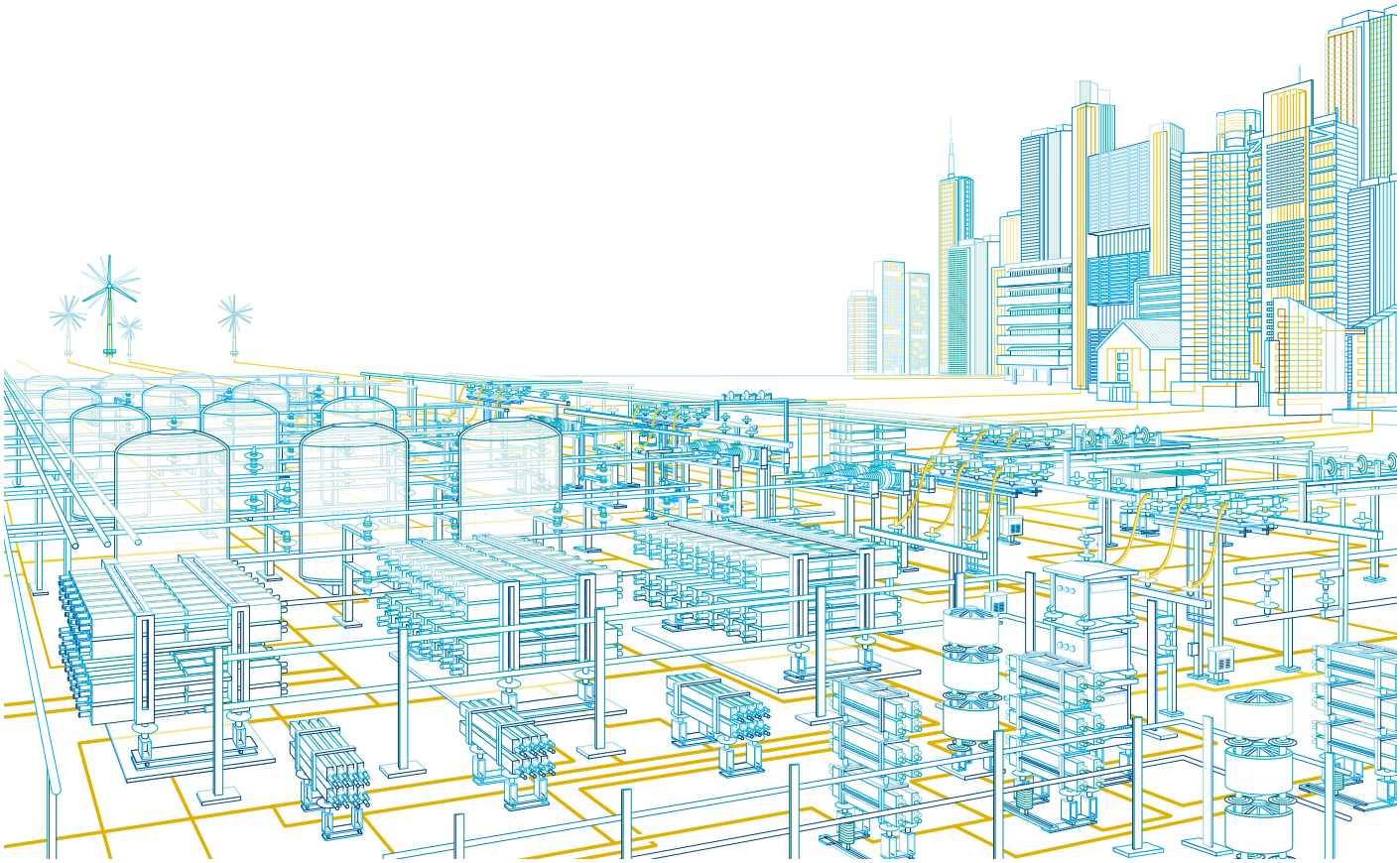

PB-85

Optimize your control circuit protection

Our SNK series fuse terminal blocks offer a full set of features and functions to protect your control circuits with efficiency and reliability.
All terminal blocks complies with the latest evolution of the international standards IEC 60947-7-3 (“Ancillary equipment safety requirements for fuse terminal blocks.”) which fixes precise temperature constraint for short-circuit and overload protection (information in the catalogue pages related to the products).

Qualified for worldwide markets and applications
Eco-designed according to international environmental standards in sustainable development.

Select the right fuse holder for the right application

1 standard applications

The standard fuse holders feature compact dimensions while offering compatibility with 5 x 20 and 5 x 25 mm fuses. double deck terminal blocks allow efficient space reduction for panels with space constraints.

2 Expert for convenient circuit distribution

The expert fuse holders are equipped with two central jumper channels for convenient common distribution and are aligned with feed-through and disconnect terminal blocks. They facilitate alternated potential distribution and reduce wiring.

Additional features for easy trouble shooting and testing

Performant blown fuse indicators

Low leakage current (< 0.5 mA) allows the protection of low current circuits such as PLC’s inputs without any risk of circuit disturbances.
Large voltage range (24/110 V and 110/250 V AC/DC) reduces the number of variants and allows adaptation to worldwide applications (24/110 V range covers North american market needs).

Easy testing

Some terminal blocks are equipped with Dia 2 mm built-in test socket screws for circuit testing while respecting the IP20 touch proof protection.

1
5x20 and 5x25 mm fuses
Compact and high density

2
5x20 and 6.3x32 mm fuses
Easy potential distribution

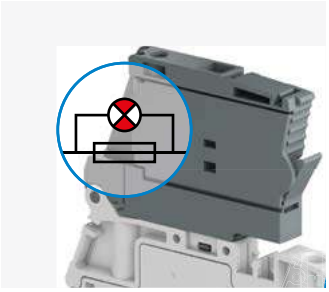

Low leakage current blown fuse indicator.
Large voltage range: (24/110 V and 110/250 V AC and DC)

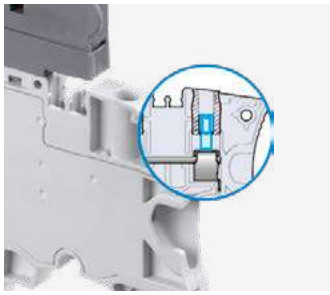

Convenient testing through built in test socket screws

1SNK161085S0201

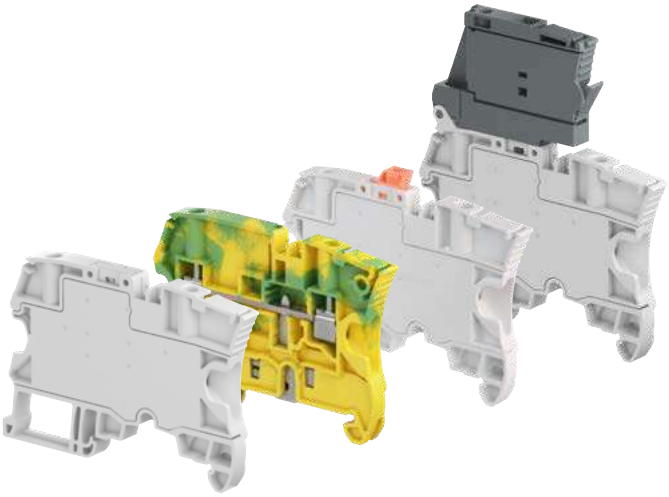

The smart choice for process automation

Large process automation applications typically require the use of a large number of digital or analog signals and sensors. Indeed, marshalling cabinets ensure an important cross wiring function, since the incoming field signal and the channel quantity of the I/O card of the controller (DCS, large PLC's) is always different. They facilitate the maintenance operations and ease the system modifications.

SNK aligned terminal blocks offering:

SNK series now features a full set of aligned terminal blocks matching the marshalling panels typical configurations. Fuse, disconnect, feed-through and ground terminal blocks with identical profile are providing compact and convenient solution. With only 6 mm spacing, two aligned screwless jumper channels, central large marking as well as aligned conductor entries, they are perfectly adapted to alternative potential distribution while still easy to connect.

Typical marshalling configurations

Digital signals

Popular potential distribution via double center channel.

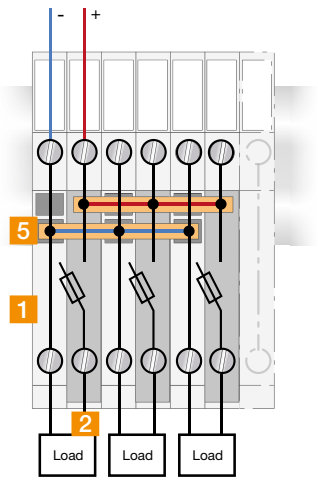

Disconnect functions equipped with test points allow total isolation of circuits, ease circuit testing during start-up, test and maintenance operations.

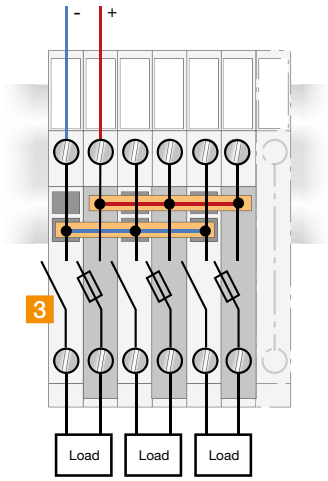

Analog

Potential distribution for analog signals. Ground terminal blocks allow reliable connection of cable shields to the ground sparing the use of external shield bar.

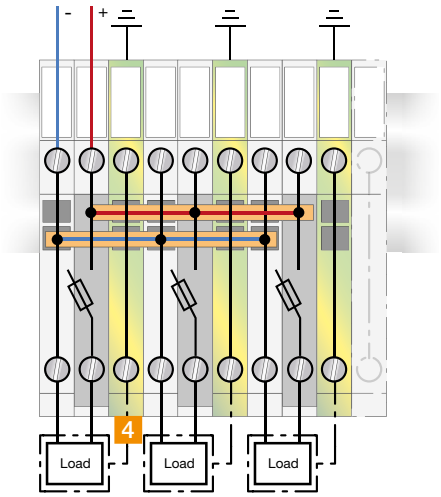

1 ZS4-R2

2 ZS4-SF

3 ZS4-S-R1 or ZS4-S-R2

4 ZS4-PE-R2

5 JB6-...

1SNK161086S0201

ZS4-SF1 screw clamp terminal blocks

For 5 x 20 and 5 x 25 fuses - 8 mm 0.315 in spacing

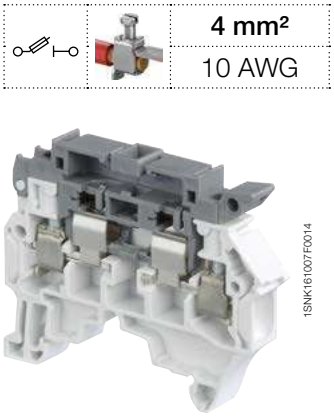

4 mm²	
10 AWG	

1SNK161007F0014

ZS4-SF1

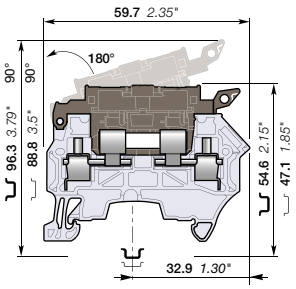

8 mm 0.315 in spacing

Description

Protect your circuit with 5x25 and 5x20 fuse terminal blocks, compliant with IEC 60947-7-3 standard (fuse not supplied with the terminal blocks).

Ordering details

Description	Color	Type	Part Number		Pkg qty	Weight (1 pce) g
Fuse	Grey, dark grey	ZS4-SF1	1SNK508410R0000		50	13.30
	Orange, dark grey	ZS4-SF1-OR	1SNK508430R0000		50	13.30

Main technical data

Connecting capacity		IEC	UL - CSA
1 conductor per clamp	Rigid - Solid / Stranded	0.2 ... 4 mm²	24 ... 10 AWG
	Flexible	0.22 ... 4 mm²	
	with non insulated ferrule	0.22 ... 4 mm²	24 ... 12 AWG
	with insulated ferrule	0.22 ... 4 mm²	24 ... 12 AWG
	Gauge	A3-B3	
2 conductors per clamp	Rigid - Solid / Stranded	0.2 ... 2.5 mm²	24 ... 14 AWG
	Flexible	0.2 ... 2.5 mm²	
	with twin ferrule	0.22 ... 2.5 mm²	24 ... 14 AWG
Rated current / Rated cross section		6.3 A / 4 mm²	10 A / 10 AWG
Rated voltage		630 V	300 V
Impulse withstand voltage		8000 V	
Protection		IP20	NEMA 1

Mounting instructions

Rail	TH 35-7.5, TH 35-15
Wire stripping length	11 mm 0.432 in
Tool	Flat screwdriver Ø 3.5 mm Ø 0.138 in
Torque	0.6 Nm ± 0.1 5.31 lb.in ± 0.885

Separate arrangement		Assembly composed of 1 fuse terminal block in between non fuse terminal blocks	Overload and short-circuit protection	2.5 W
			Exclusive short-circuit protection	4 W
Compound arrangement		Assembly composed of 5 fuse terminal blocks	Overload and short-circuit protection	1.6 W
			Exclusive short-circuit protection	4 W

The connecting capacity data for one Rigid - Solid / Stranded - Flexible conductor (when applicable) is a mandatory information required by IEC, UL and CSA standards (Copper conductors). All other data are provided as supplementary information only. For more details, please consult our CB, UL or CSA certificates and technical datasheet available on http://www.TE.com

CE | CB | RoHS | USR CNR | CSA | EAC | BV | DNV | Rina

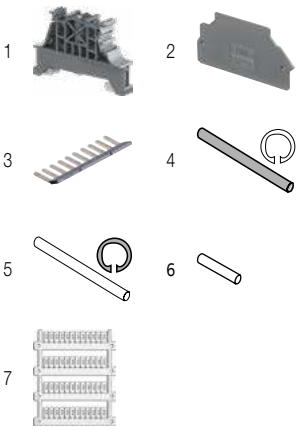

Accessories

	Description			Color	Type	Part Number		Pkg qty	Weight (1 pce) g
1	End stops	10 mm	0.394 in	Dark grey	BAM4	1SNK900001R0000		50	14.00
2	End sections	1.5 mm	0.059 in	Dark grey	ES4-SF	1SNK508960R0000		20	1.80
3	Lateral jumper bars	10 poles	35 A (IEC)	Grey	PC81-10	1SNA173523R1100		10	5.00
4	Assembly rods	2 poles			TGA8	1SNA168672R1100		10	1.00
		3 poles			TGA8	1SNA168673R1200		10	1.50
		4 poles			TGA8	1SNA168674R1300		10	2.00
5	Spring retaining Rings				ANT	1SNA168675R1400		10	
6	Neutral cartridge	5x25			CN5	1SNA179371R1600		10	3.9
7	Terminal block markers	Blank marker		White	MG-CPM 13 41791	1SNB041791R0612		1680	0.27
		Blank card			MC812	1SNK160000R0000		22	10.00
					MC812PA	1SNK169999R0000		20	14.00
		Universal wire markers holder		Grey	UMH	1SNK900611R0000		10	0.20

Complete list of accessories is indicated in the terminal block datasheet including end stops.
Some accessories such as jumper bars may modify the terminal block's ratings: Complete information available in the accessories section of the catalog.

1SNK161011S0201

Technical data valid for copper conductors only.

ZS4-SF1-T screw clamp terminal blocks

For 5 x 20 and 5 x 25 fuses - with test socket - 8 mm 0.315 in spacing

4 mm²
10 AWG

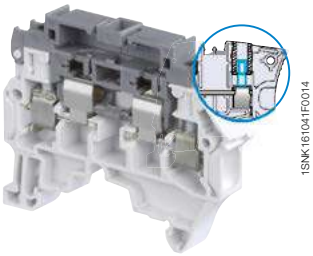

ZS4-SF1-T

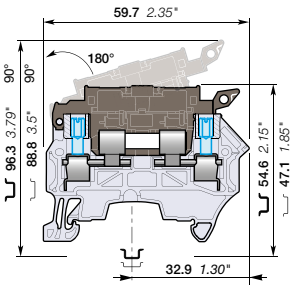

8 mm 0.315 in spacing

Description

- Protect your circuit with 5x25 and 5x20 fuse terminal blocks (fuse not supplied with the terminal blocks),
- Compliant with IEC 60947-7-3 standard,
- With built in test sockets.

Ordering details

Description		Color	Type	Part Number		Pkg qty	Weight (1 pce) g
Fuse	With 2 test sockets DIA 2 mm 0.079 in	Grey, dark grey	ZS4-SF1-T2	1SNK508411R0000		50	13.30

Main technical data

Connecting capacity		IEC	UL - CSA
1 conductor per clamp	Rigid - Solid / Stranded	0.2 ... 4 mm²	24 ... 10 AWG
	Flexible	0.22 ... 4 mm²	
	with non insulated ferrule	0.22 ... 4 mm²	24 ... 12 AWG
	with insulated ferrule	0.22 ... 4 mm²	24 ... 12 AWG
	Gauge	A3-B3	
2 conductors per clamp	Rigid - Solid / Stranded	0.2 ... 2.5 mm²	24 ... 14 AWG
	Flexible	0.2 ... 2.5 mm²	
	with twin ferrule	0.22 ... 2.5 mm²	24 ... 14 AWG
Rated current / Rated cross section		6.3 A / 4 mm²	10 A / 10 AWG
Rated voltage		630 V	300 V
Impulse withstand voltage		8000 V	
Protection		IP20	NEMA 1

Mounting instructions

Rail		TH 35-7.5, TH 35-15
Wire stripping length		11 mm 0.432 in
Tool		Flat screwdriver Ø 3.5 mm Ø 0.138 in
Torque		0.6 Nm ± 0.1 5.31 lb.in ± 0.885

Separate arrangement		Assembly composed of 1 fuse terminal block in between non fuse terminal blocks	Overload and short-circuit protection	2.5 W
			Exclusive short-circuit protection	4 W
Compound arrangement		Assembly composed of 5 fuse terminal blocks	Overload and short-circuit protection	1.6 W
			Exclusive short-circuit protection	4 W

The connecting capacity data for one Rigid - Solid / Stranded - Flexible conductor (when applicable) is a mandatory information required by IEC, UL and CSA standards (Copper conductors). All other data are provided as supplementary information only. For more details, please consult our CB, UL or CSA certificates and technical datasheet available on http://www.TE.com

CE CB RoHS USR CNR CSA EAC BV DNV Rina

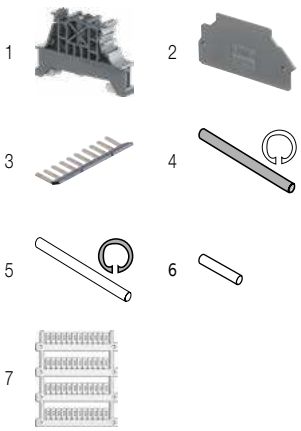

Accessories

	Description			Color	Type	Part Number		Pkg qty	Weight (1 pce) g
1	**End stops**	10 mm	0.394 in	Dark grey	BAM4	1SNK900001R0000		50	14.00
2	**End sections**	1.5 mm	0.059 in	Dark grey	ES4-SF	1SNK508960R0000		20	1.80
3	**Lateral jumper bars**	10 poles	35 A (IEC)	Grey	PC81-10	1SNA173523R1100		10	5.00
4	**Assembly rods**	2 poles			TGA8	1SNA168672R1100		10	1.00
		3 poles			TGA8	1SNA168673R1200		10	1.50
		4 poles			TGA8	1SNA168674R1300		10	2.00
5	**Spring retaining Rings**				ANT	1SNA168675R1400		10	
6	**Neutral cartridge**	5x25			CN5	1SNA179371R1600		10	3.9
7	**Terminal block markers**	Blank marker		White	MG-CPM 13 41791	1SNB041791R0612		1680	0.27
		Blank card			MC812	1SNK160000R0000		22	10.00
					MC812PA	1SNK169999R0000		20	14.00
		Universal wire markers holder		Grey	UMH	1SNK900611R0000		10	0.20

Complete list of accessories is indicated in the terminal block datasheet including end stops.
Some accessories such as jumper bars may modify the terminal block's ratings: Complete information available in the accessories section of the catalog.

1SNK161036S0201

Technical data valid for copper conductors only.

ZS4-SF1-R screw clamp terminal blocks

For 5 x 20 and 5 x 25 fuses - with blown fuse indicator - 8 mm 0.315 in spacing

4 mm²
10 AWG

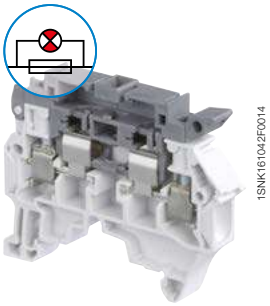

ZS4-SF1-R

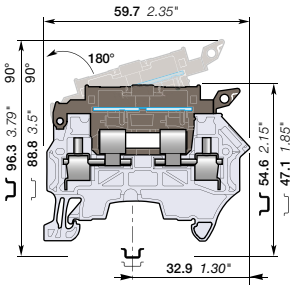

8 mm 0.315 in spacing

Description

- Protect your circuit with 5x25 and 5x20 fuse terminal blocks (fuse not supplied with the terminal blocks),
- Compliant with IEC 60947-7-3 standard,
- Quickly identify the defective circuit thanks to the blown fuse indicator (with leakage current < 0.5 mA).

Ordering details

Description		Color	Type	Part Number		Pkg qty	Weight (1 pce) g
Fuse	With blown fuse indicator 115 ... 250 V AC / DC	Grey, dark grey	ZS4-SF1-R3	1SNK508414R0000		50	13.30
	With blown fuse indicator 24 ... 110 V AC / DC		ZS4-SF1-R1	1SNK508412R0000		50	13.30

Main technical data

Connecting capacity		IEC	UL - CSA
1 conductor per clamp	Rigid - Solid / Stranded	0.2 ... 4 mm²	24 ... 10 AWG
	Flexible	0.22 ... 4 mm²	
	with non insulated ferrule	0.22 ... 4 mm²	24 ... 12 AWG
	with insulated ferrule	0.22 ... 4 mm²	24 ... 12 AWG
	Gauge	A3-B3	
2 conductors per clamp	Rigid - Solid / Stranded	0.2 ... 2.5 mm²	24 ... 14 AWG
	Flexible	0.2 ... 2.5 mm²	
	with twin ferrule	0.22 ... 2.5 mm²	24 ... 14 AWG
Rated current / Rated cross section		6.3 A / 4 mm²	10 A / 10 AWG
Rated voltage		630 V	300 V
Impulse withstand voltage		8000 V	
Protection		IP20	NEMA 1

Mounting instructions

Rail	TH 35-7.5, TH 35-15
Wire stripping length	11 mm 0.432 in
Tool	Flat screwdriver Ø 3.5 mm Ø 0.138 in
Torque	0.6 Nm ± 0.1 5.31 lb.in ± 0.885

Separate arrangement	Assembly composed of 1 fuse terminal block in between non fuse terminal blocks	Overload and short-circuit protection	2.5 W
		Exclusive short-circuit protection	4 W
Compound arrangement	Assembly composed of 5 fuse terminal blocks	Overload and short-circuit protection	1.6 W
		Exclusive short-circuit protection	4 W

The connecting capacity data for one Rigid - Solid / Stranded - Flexible conductor (when applicable) is a mandatory information required by IEC, UL and CSA standards (Copper conductors). All other data are provided as supplementary information only. For more details, please consult our CB, UL or CSA certificates and technical datasheet available on http://www.TE.com

CE, CB, RoHS, USR CNR, CSA, EAC, BV, DNV, Rina

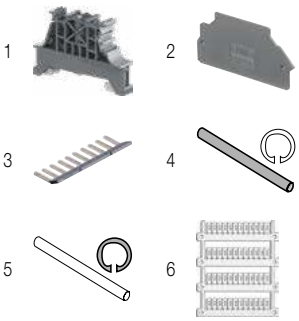

Accessories

	Description			Color	Type	Part Number		Pkg qty	Weight (1 pce) g
1	**End stops**	10 mm	0.394 in	Dark grey	BAM4	1SNK900001R0000		50	14.00
2	**End sections**	1.5 mm	0.059 in	Dark grey	ES4-SF	1SNK508960R0000		20	1.80
3	**Lateral jumper bars**	10 poles	35 A (IEC)	Grey	PC81-10	1SNA173523R1100		10	5.00
4	**Assembly rods**	2 poles			TGA8	1SNA168672R1100		10	1.00
		3 poles			TGA8	1SNA168673R1200		10	1.50
		4 poles			TGA8	1SNA168674R1300		10	2.00
5	**Spring retaining Rings**				ANT	1SNA168675R1400		10	
6	**Terminal block markers**	Blank marker		White	MG-CPM 13 41791	1SNB041791R0612		1680	0.27
		Blank card			MC812	1SNK160000R0000		22	10.00
					MC812PA	1SNK169999R0000		20	14.00
		Universal wire markers holder		Grey	UMH	1SNK900611R0000		10	0.20

Complete list of accessories is indicated in the terminal block datasheet including end stops.
Some accessories such as jumper bars may modify the terminal block's ratings: Complete information available in the accessories section of the catalog.

1SNK161034S0201

Technical data valid for copper conductors only.

ZS4-SF1-R screw clamp terminal blocks

For 5 x 20 and 5 x 25 fuses - with blown fuse indicator and test sockets - 8 mm 0.315 in spacing

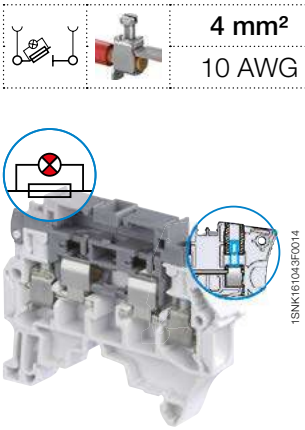

ZS4-SF1-R

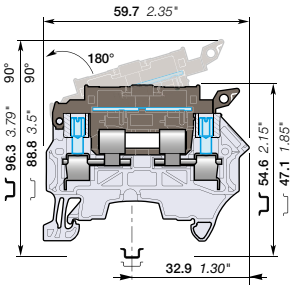

8 mm 0.315 in spacing

	4 mm²
	10 AWG

Description

- Protect your circuit with 5x25 and 5x20 fuse terminal blocks (fuse not supplied with the terminal blocks),
- Compliant with IEC 60947-7-3 standard,
- Ease the test with built-in test sockets,
- Quickly identify the defective circuit thanks to the blown fuse indicator (with leakage current < 0.5 mA).

Ordering details

Description		Color	Type	Part Number		Pkg qty	Weight (1 pce) g
Fuse	With blown fuse indicator 115 … 250 V AC / DC and 2 test sockets DIA 2 mm 0.079 in	Grey, dark grey	ZS4-SF1-R4	1SNK508415R0000		50	13.30
	With blown fuse indicator 24 … 110 V AC / DC and 2 test sockets DIA 2 mm 0.079 in		ZS4-SF1-R2	1SNK508413R0000		50	13.30

Main technical data

Connecting capacity		IEC	UL - CSA
1 conductor per clamp	Rigid - Solid / Stranded	0.2 … 4 mm²	24 … 10 AWG
	Flexible	0.22 … 4 mm²	
	with non insulated ferrule	0.22 … 4 mm²	24 … 12 AWG
	with insulated ferrule	0.22 … 4 mm²	24 … 12 AWG
	Gauge	A3-B3	
2 conductors per clamp	Rigid - Solid / Stranded	0.2 … 2.5 mm²	24 … 14 AWG
	Flexible	0.2 … 2.5 mm²	
	with twin ferrule	0.22 … 2.5 mm²	24 … 14 AWG
Rated current / Rated cross section		6.3 A / 4 mm²	10 A / 10 AWG
Rated voltage		630 V	300 V
Impulse withstand voltage		8000 V	
Protection		IP20	NEMA 1

Mounting instructions

Rail		TH 35-7.5, TH 35-15
Wire stripping length		11 mm 0.432 in
Tool		Flat screwdriver Ø 3.5 mm Ø 0.138 in
Torque		0.6 Nm ± 0.1 5.31 lb.in ± 0.885

Separate arrangement		Assembly composed of 1 fuse terminal block in between non fuse terminal blocks	Overload and short-circuit protection	2.5 W
			Exclusive short-circuit protection	4 W
Compound arrangement		Assembly composed of 5 fuse terminal blocks	Overload and short-circuit protection	1.6 W
			Exclusive short-circuit protection	4 W

The connecting capacity data for one Rigid - Solid / Stranded - Flexible conductor (when applicable) is a mandatory information required by IEC, UL and CSA standards (Copper conductors). All other data are provided as supplementary information only. For more details, please consult our CB, UL or CSA certificates and technical datasheet available on http://www.TE.com

CE CB RoHS USR CNR CSA EAC BV DNV Rina

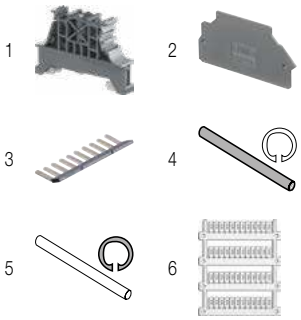

Accessories

	Description			Color	Type	Part Number		Pkg qty	Weight (1 pce) g
1	**End stops**	10 mm	0.394 in	Dark grey	BAM4	1SNK900001R0000		50	14.00
2	**End sections**	1.5 mm	0.059 in	Dark grey	ES4-SF	1SNK508960R0000		20	1.80
3	**Lateral jumper bars**	10 poles	35 A (IEC)	Grey	PC81-10	1SNA173523R1100		10	5.00
4	**Assembly rods**	2 poles			TGA8	1SNA168672R1100		10	1.00
		3 poles			TGA8	1SNA168673R1200		10	1.50
		4 poles			TGA8	1SNA168674R1300		10	2.00
5	**Spring retaining Rings**				ANT	1SNA168675R1400		10	
6	**Terminal block markers**	Blank marker		White	MG-CPM 13 41791	1SNB041791R0612		1680	0.27
		Blank card			MC812	1SNK160000R0000		22	10.00
					MC812PA	1SNK169999R0000		20	14.00
		Universal wire markers holder		Grey	UMH	1SNK900611R0000		10	0.20

Complete list of accessories is indicated in the terminal block datasheet including end stops.
Some accessories such as jumper bars may modify the terminal block's ratings: Complete information available in the accessories section of the catalog.

1SNK161035S0201

Technical data valid for copper conductors only.

ZS4-R1 screw clamp terminal blocks
Feed-through - 8 mm 0.315 in spacing

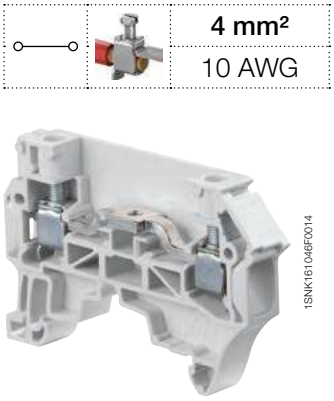

ZS4-R1

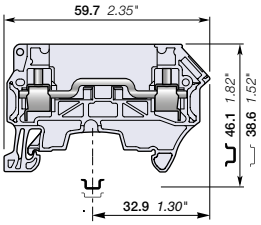

8 mm 0.315 in spacing

	4 mm²
	10 AWG

Description

Simplify the alternated feed-through and fuse circuits operations:

– With the same profile as the ZS4-SF1, the wiring of the alternated feed-through and fuse circuits is easier.

Ordering details

Description		Color	Type	Part Number		Pkg qty	Weight (1 pce) g
Feed-through	Profile aligned with ZS4-SF1	Grey	ZS4-R1	1SNK508013R0000		50	11.00

Main technical data

Connecting capacity		IEC	UL - CSA
1 conductor per clamp	Rigid - Solid / Stranded	0.2 ... 4 mm²	24 ... 10 AWG
	Flexible	0.22 ... 4 mm²	
	with non insulated ferrule	0.22 ... 4 mm²	24 ... 12 AWG
	with insulated ferrule	0.22 ... 4 mm²	24 ... 12 AWG
	Gauge	A3-B3	
2 conductors per clamp	Rigid - Solid / Stranded	0.2 ... 2.5 mm²	24 ... 14 AWG
	Flexible	0.2 ... 2.5 mm²	
	with twin ferrule	0.22 ... 2.5 mm²	24 ... 14 AWG
Rated current / Rated cross section		24 A / 2.5 mm²	26 A / 10 AWG
Rated short-time withstand current (1s)		300 A	
Short Circuit Current Rating (with specific conditions)			
Rated voltage		800 V	300 V
Impulse withstand voltage		6000 V	
Protection		IP20	NEMA 1

Mounting instructions

Rail	TH 35-7.5, TH 35-15
Wire stripping length	11 mm 0.432 in
Tool	Flat screwdriver Ø 3.5 mm Ø 0.138 in
Torque	0.6 Nm ± 0.1 5.31 lb.in ± 0.885

The connecting capacity data for one Rigid - Solid / Stranded - Flexible conductor (when applicable) is a mandatory information required by IEC, UL and CSA standards (Copper conductors). All other data are provided as supplementary information only. For more details, please consult our CB, UL or CSA certificates and technical datasheet available on http://www.TE.com

CE, CB, RoHS, USR CNR, CSA, EAC, BV, DNV, Rina

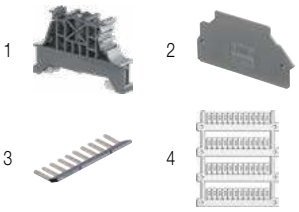

Accessories

	Description			Color	Type	Part Number		Pkg qty	Weight (1 pce) g
1	**End stops**	10 mm	0.394 in	Dark grey	BAM4	1SNK900001R0000		50	14.00
2	**End sections**	1.5 mm	0.059 in	Dark grey	ES4-SF	1SNK508960R0000		20	1.80
3	**Lateral jumper bars**	10 poles	35 A (IEC)	Grey	PC81-10	1SNA173523R1100		10	5.00
4	**Terminal block markers**	Blank marker		White	MG-CPM 13 41791	1SNB041791R0612		1680	0.27
		Blank card			MC812	1SNK160000R0000		22	10.00
					MC812PA	1SNK169999R0000		20	14.00
		Universal wire markers holder		Grey	UMH	1SNK900611R0000		10	0.20

Complete list of accessories is indicated in the terminal block datasheet including end stops.
Some accessories such as jumper bars may modify the terminal block's ratings: Complete information available in the accessories section of the catalog.

Fuse screw clamp terminal blocks

Description	Color	Type	Part Number		Pkg qty	Weight (1 pce) g
Fuse	Grey, dark grey	ZS4-SF1	1SNK508410R0000		50	13.30

1SNK161009S0201

Technical data valid for copper conductors only.

ZS4-S-R3 screw clamp terminal blocks

Disconnect with lever - 8 mm 0.315 in spacing

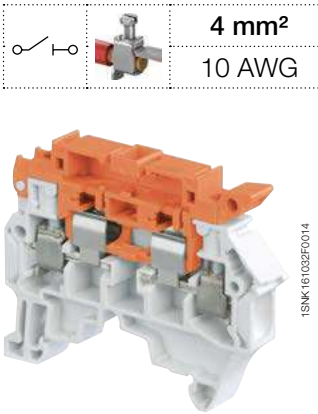

1SNK161032F0014

ZS4-S-R3

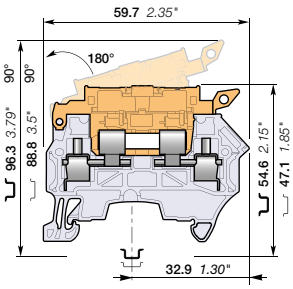

8 mm 0.315 in spacing

4 mm²
10 AWG

Description

Simplify the disconnect operations for the disconnect terminal blocks installed next to fuse terminal blocks ZS4-SF1:

- With the same profile as ZS4-SF1, the ZS4-S-R3 disconnect lever is easily operated by hand and the wiring of the alternated disconnect and fuse circuits is easier.,
- Neutral cartridge CN5 5x25 included.

Ordering details

Description		Color	Type	Part Number		Pkg qty	Weight (1 pce) g
Disconnect	Profile aligned with ZS4-SF1	Grey, orange	ZS4-S-R3	1SNK508416R0000		50	13.30
		Grey, blue	ZS4-S-R3-T2	1SNK508419R0000		50	13.30

Main technical data

Connecting capacity		IEC	UL - CSA
1 conductor per clamp	Rigid - Solid / Stranded	0.2 ... 4 mm²	24 ... 10 AWG
	Flexible	0.22 ... 4 mm²	
	with non insulated ferrule	0.22 ... 4 mm²	24 ... 12 AWG
	with insulated ferrule	0.22 ... 4 mm²	24 ... 12 AWG
	Gauge	A3-B3	
2 conductors per clamp	Rigid - Solid / Stranded	0.2 ... 2.5 mm²	24 ... 14 AWG
	Flexible	0.2 ... 2.5 mm²	
	with twin ferrule	0.22 ... 2.5 mm²	24 ... 14 AWG
Rated current / Rated cross section		18 A / 2.5 mm²	18 A / 10 AWG
Maximum current / Maximum cross section		18 A / 4 mm²	
Rated short-time withstand current (1s)		300 A	
Rated voltage		630 V	300 V
Impulse withstand voltage		6000 V	
Protection		IP20	NEMA 1

Mounting instructions

Rail	TH 35-7.5, TH 35-15
Wire stripping length	11 mm 0.432 in
Tool	Flat screwdriver Ø 3.5 mm Ø 0.138 in
Torque	0.6 Nm ± 0.1 5.31 lb.in ± 0.885

Recommendation for best usage: in horizontal assemblies, disconnect terminal blocks should be mounted with fixed foot on top (power side) so that the disconnect lever does not partially close through gravity. Furthermore, as specified per IEC 60947-7-1, disconnect terminal blocks are intended to be used for temporary disconnection at zero potential and at no load.

The connecting capacity data for one Rigid - Solid / Stranded - Flexible conductor (when applicable) is a mandatory information required by IEC, UL and CSA standards (Copper conductors). All other data are provided as supplementary information only. For more details, please consult our CB, UL or CSA certificates and technical datasheet available on http://www.TE.com

CE RoHS USR CNR CSA EAC BV DNV Rina

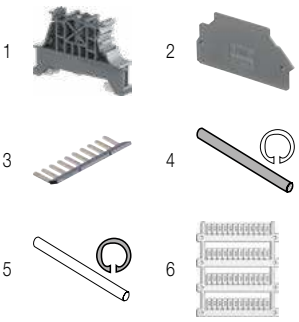

Accessories

	Description			Color	Type	Part Number		Pkg qty	Weight (1 pce) g
1	**End stops**	10 mm	0.394 in	Dark grey	BAM4	1SNK900001R0000		50	14.00
2	**End sections**	1.5 mm	0.059 in	Dark grey	ES4-SF	1SNK508960R0000		20	1.80
3	**Lateral jumper bars**	10 poles	35 A (IEC)	Grey	PC81-10	1SNA173523R1100		10	5.00
4	**Assembly rods**	2 poles			TGA8	1SNA168672R1100		10	1.00
		3 poles			TGA8	1SNA168673R1200		10	1.50
		4 poles			TGA8	1SNA168674R1300		10	2.00
5	**Spring retaining Rings**				ANT	1SNA168675R1400		10	
6	**Terminal block markers**	Blank marker		White	MG-CPM 13 41791	1SNB041791R0612		1680	0.27
		Blank card			MC812	1SNK160000R0000		22	10.00
					MC812PA	1SNK169999R0000		20	14.00
		Universal wire markers holder		Grey	UMH	1SNK900611R0000		10	0.20

Complete list of accessories is indicated in the terminal block datasheet including end stops.
Some accessories such as jumper bars may modify the terminal block's ratings: Complete information available in the accessories section of the catalog.

Fuse screw clamp terminal blocks

Description	Color	Type	Part Number		Pkg qty	Weight (1 pce) g
Fuse	Grey, dark grey	ZS4-SF1	1SNK508410R0000		50	13.30

1SNK161044S0201

Technical data valid for copper conductors only.

ZS4-SF screw clamp terminal blocks
For 5 x 20 fuses - 6 mm 0.236 in spacing

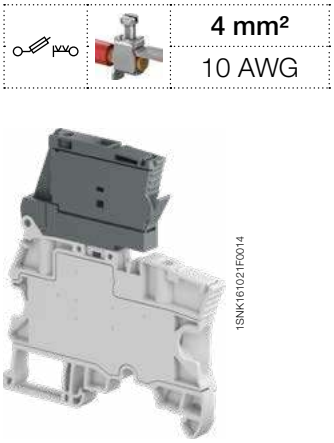

ZS4-SF

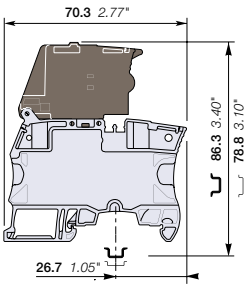

6 mm 0.236 in spacing

	4 mm²
	10 AWG

Description

- Protect your circuits with 5x20 fuse terminal blocks compliant with IEC 60947-7-3 standard (fuse not supplied with the terminal blocks),
- Simplify the distribution thanks to the two jumper channels aligned with ZS4 or ZS4-R2 feed-through and ZS4-S-R1 disconnect terminal blocks.

Ordering details

Description	Color	Type	Part Number		Pkg qty	Weight (1 pce) g
Fuse	Grey, dark grey	ZS4-SF	1SNK506410R0000		50	18.60

Main technical data

Connecting capacity		IEC	UL - CSA
1 conductor per clamp	Rigid - Solid / Stranded	0.2 ... 4 mm²	24 ... 10 AWG
	Flexible	0.22 ... 4 mm²	
	with non insulated ferrule	0.22 ... 4 mm²	24 ... 12 AWG
	with insulated ferrule	0.22 ... 4 mm²	24 ... 12 AWG
	Gauge	A3-B3	
2 conductors per clamp	Rigid - Solid / Stranded	0.2 ... 1.5 mm²	24 ... 16 AWG
	Flexible	0.2 ... 1.5 mm²	
	with twin ferrule	0.22 ... 1.5 mm²	24 ... 16 AWG
Rated current / Rated cross section		6.3 A / 4 mm²	10 A / 10 AWG
Rated voltage		500 V	150 V
Impulse withstand voltage		6000 V	
Protection		IP20	NEMA 1

Mounting instructions

Rail	TH 35-7.5, TH 35-15
Wire stripping length	10.5 mm 0.412 in
Tool	Flat screwdriver Ø 3.5 mm Ø 0.138 in
Torque	0.6 Nm ± 0.1 5.31 lb.in ± 0.885

Mount your fuse safely without touching any active part: put the fuse into the hooks of the fuse holder shutter; at the closing of the shutter, the fuse is perfectly in place in the fuse holder.

Separate arrangement		Assembly composed of 1 fuse terminal block in between non fuse terminal blocks	Overload and short-circuit protection	2.5 W
			Exclusive short-circuit protection	4 W
Compound arrangement		Assembly composed of 5 fuse terminal blocks	Overload and short-circuit protection	2.5 W
			Exclusive short-circuit protection	4 W

The connecting capacity data for one Rigid - Solid / Stranded - Flexible conductor (when applicable) is a mandatory information required by IEC, UL and CSA standards (Copper conductors). All other data are provided as supplementary information only. For more details, please consult our CB, UL or CSA certificates and technical datasheet available on http://www.TE.com

CE CB RoHS USR CNR CSA EAC BV DNV Rina

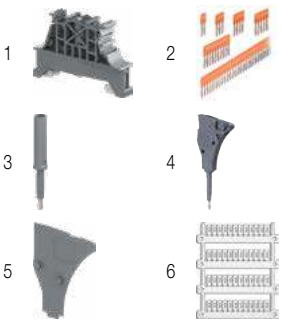

Accessories

	Description			Color	Type	Part Number		Pkg qty	Weight (1 pce) g
1	End stops	10 mm	0.394 in	Dark grey	BAM4	1SNK900001R0000		50	14.00
2	Jumper bars	2 poles	41 A (IEC)	Orange	JB6-2	1SNK906302R0000		50	1.30
		3 poles	41 A (IEC)		JB6-3	1SNK906303R0000		50	2.10
		4 poles	41 A (IEC)		JB6-4	1SNK906304R0000		50	2.90
		5 poles	41 A (IEC)		JB6-5	1SNK906305R0000		50	3.60
		10 poles	41 A (IEC)		JB6-10	1SNK906310R0000		20	7.40
3	Test adapters	For test plugs DIA 2 mm 0.079 in		Dark grey	TP2	1SNK900203R0000		20	1.70
		For test plugs DIA 4 mm 0.157 in			TP4	1SNK900205R0000		20	2.40
4	Test connectors	End module, 5.2 mm 0.205 in		Dark grey	TC5-R1	1SNK900201R0000		10	5.20
5	Spacers	0.8 mm	0.031 in	Dark grey	ES-TC6	1SNK900105R0000		10	0.80
6	Terminal block markers	Blank marker		White	MG-CPM 13 41791	1SNB041791R0612		1680	0.27
		Blank card			MC612	1SNK150000R0000		22	10.00
					MC612PA	1SNK159999R0000		20	11.00
		Universal wire markers holder		Grey	UMH	1SNK900611R0000		10	0.20

Complete list of accessories is indicated in the terminal block datasheet including end stops.
Some accessories such as jumper bars may modify the terminal block's ratings: Complete information available in the accessories section of the catalog.

1SNK161005S0201

Technical data valid for copper conductors only.

ZS4-SF-T screw clamp terminal blocks

For 5 x 20 fuses - with test socket - 6 mm 0.236 in spacing

4 mm²
10 AWG

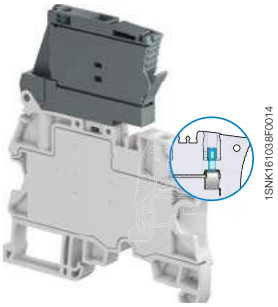

ZS4-SF-T

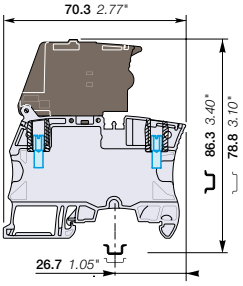

6 mm 0.236 in spacing

Description

- Protect your circuits with 5x20 fuse terminal blocks compliant with IEC 60947-7-3 standard (fuse not supplied with the terminal blocks),
- Simplify the distribution thanks to the two jumper channels aligned with ZS4 or ZS4-R2 feed-through and ZS4-S-R1 disconnect terminal blocks,
- Ease the test with built-in test socket screws.

Ordering details

Description		Color	Type	Part Number		Pkg qty	Weight (1 pce) g
Fuse	With 2 test sockets DIA 2 mm 0.079 in	Grey, dark grey	ZS4-SF-T2	1SNK506411R0000		50	18.60

Main technical data

Connecting capacity		IEC	UL - CSA
1 conductor per clamp	Rigid - Solid / Stranded	0.2 ... 4 mm²	24 ... 10 AWG
	Flexible	0.22 ... 4 mm²	
	with non insulated ferrule	0.22 ... 4 mm²	24 ... 12 AWG
	with insulated ferrule	0.22 ... 4 mm²	24 ... 12 AWG
	Gauge	A3-B3	
2 conductors per clamp	Rigid - Solid / Stranded	0.2 ... 1.5 mm²	24 ... 16 AWG
	Flexible	0.2 ... 1.5 mm²	
	with twin ferrule	0.22 ... 1.5 mm²	24 ... 16 AWG
Rated current / Rated cross section		6.3 A / 4 mm²	10 A / 10 AWG
Rated voltage		500 V	150 V
Impulse withstand voltage		6000 V	
Protection		IP20	NEMA 1

Mounting instructions

Rail		TH 35-7.5, TH 35-15
Wire stripping length		10.5 mm 0.412 in
Tool		Flat screwdriver Ø 3.5 mm Ø 0.138 in
Torque		0.6 Nm ± 0.1 5.31 lb.in ± 0.885

Mount your fuse safely without touching any active part: put the fuse into the hooks of the fuse holder shutter; at the closing of the shutter, the fuse is perfectly in place in the fuse holder.

Separate arrangement		Assembly composed of 1 fuse terminal block in between non fuse terminal blocks	Overload and short-circuit protection	2.5 W
			Exclusive short-circuit protection	4 W
Compound arrangement		Assembly composed of 5 fuse terminal blocks	Overload and short-circuit protection	2.5 W
			Exclusive short-circuit protection	4 W

The connecting capacity data for one Rigid - Solid / Stranded - Flexible conductor (when applicable) is a mandatory information required by IEC, UL and CSA standards (Copper conductors). All other data are provided as supplementary information only. For more details, please consult our CB, UL or CSA certificates and technical datasheet available on http://www.TE.com

CE | CB | RoHS | USR CNR | CSA | EAC | BV | DNV | Rina

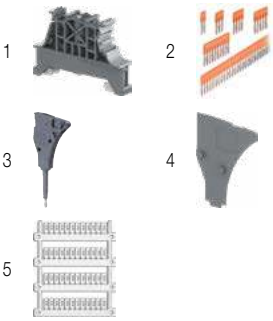

Accessories

	Description			Color	Type	Part Number		Pkg qty	Weight (1 pce) g
1	**End stops**	10 mm	0.394 in	Dark grey	BAM4	1SNK900001R0000		50	14.00
2	**Jumper bars**	2 poles	41 A (IEC)	Orange	JB6-2	1SNK906302R0000		50	1.30
		3 poles	41 A (IEC)		JB6-3	1SNK906303R0000		50	2.10
		4 poles	41 A (IEC)		JB6-4	1SNK906304R0000		50	2.90
		5 poles	41 A (IEC)		JB6-5	1SNK906305R0000		50	3.60
		10 poles	41 A (IEC)		JB6-10	1SNK906310R0000		20	7.40
3	**Test connectors**	End module, 5.2 mm 0.205 in		Dark grey	TC5-R1	1SNK900201R0000		10	5.20
4	**Spacers**	0.8 mm	0.031 in	Dark grey	ES-TC6	1SNK900105R0000		10	0.80
5	**Terminal block markers**	Blank marker		White	MG-CPM 13 41791	1SNB041791R0612		1680	0.27
		Blank card			MC612	1SNK150000R0000		22	10.00
					MC612PA	1SNK159999R0000		20	11.00
		Universal wire markers holder		Grey	UMH	1SNK900611R0000		10	0.20

Complete list of accessories is indicated in the terminal block datasheet including end stops.
Some accessories such as jumper bars may modify the terminal block's ratings: Complete information available in the accessories section of the catalog.

1SNK161038S0201

Technical data valid for copper conductors only.

ZS4-SF-R screw clamp terminal blocks

For 5 x 20 fuses - with blown fuse indicator - 6 mm 0.236 in spacing

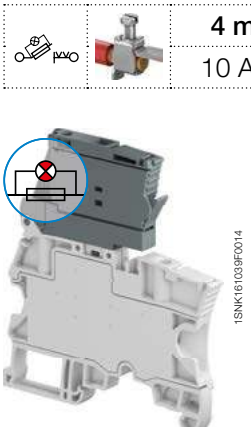

ZS4-SF-R

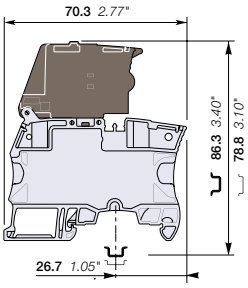

6 mm 0.236 in spacing

	4 mm²
	10 AWG

Description

- Protect your circuits with 5x20 fuse terminal blocks compliant with IEC 60947-7-3 standard (fuse not supplied with the terminal blocks),
- Simplify the distribution thanks to the two jumper channels aligned with ZS4 or ZS4-R2 feed-through and ZS4-S-R1 disconnect terminal blocks,
- Quickly identify the defective circuit thanks to the blown fuse indicator (with leakage current < 0.5 mA).

Ordering details

Description		Color	Type	Part Number		Pkg qty	Weight (1 pce) g
Fuse	With blown fuse indicator 115 ... 250 V AC / DC	Grey, dark grey	ZS4-SF-R3	1SNK506415R0000		50	18.60
	With blown fuse indicator 24 ... 110 V AC / DC		ZS4-SF-R1	1SNK506412R0000		50	18.60

Main technical data

Connecting capacity		IEC	UL - CSA
1 conductor per clamp	Rigid - Solid / Stranded	0.2 ... 4 mm²	24 ... 10 AWG
	Flexible	0.22 ... 4 mm²	
	with non insulated ferrule	0.22 ... 4 mm²	24 ... 12 AWG
	with insulated ferrule	0.22 ... 4 mm²	24 ... 12 AWG
	Gauge	A3-B3	
2 conductors per clamp	Rigid - Solid / Stranded	0.2 ... 1.5 mm²	24 ... 16 AWG
	Flexible	0.2 ... 1.5 mm²	
	with twin ferrule	0.22 ... 1.5 mm²	24 ... 16 AWG
Rated current / Rated cross section		6.3 A / 4 mm²	10 A / 10 AWG
Rated voltage		500 V	150 V
Impulse withstand voltage		6000 V	
Protection		IP20	NEMA 1

Mounting instructions

Rail		TH 35-7.5, TH 35-15
Wire stripping length		10.5 mm 0.412 in
Tool		Flat screwdriver Ø 3.5 mm Ø 0.138 in
Torque		0.6 Nm ± 0.1 5.31 lb.in ± 0.885

Mount your fuse safely without touching any active part: put the fuse into the hooks of the fuse holder shutter; at the closing of the shutter, the fuse is perfectly in place in the fuse holder.

Separate arrangement		Assembly composed of 1 fuse terminal block in between non fuse terminal blocks	Overload and short-circuit protection	2.5 W
			Exclusive short-circuit protection	4 W
Compound arrangement		Assembly composed of 5 fuse terminal blocks	Overload and short-circuit protection	2.5 W
			Exclusive short-circuit protection	4 W

The connecting capacity data for one Rigid - Solid / Stranded - Flexible conductor (when applicable) is a mandatory information required by IEC, UL and CSA standards (Copper conductors). All other data are provided as supplementary information only. For more details, please consult our CB, UL or CSA certificates and technical datasheet available on http://www.TE.com

CE CB RoHS USR CNR CSA EAC BV DNV Rina

Accessories

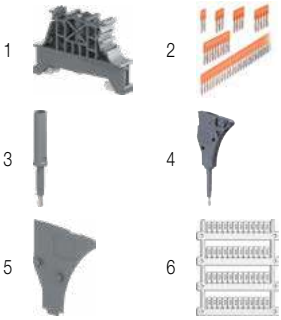

	Description			Color	Type	Part Number		Pkg qty	Weight (1 pce) g
1	**End stops**	10 mm	0.394 in	Dark grey	BAM4	1SNK900001R0000		50	14.00
2	**Jumper bars**	2 poles	41 A (IEC)	Orange	JB6-2	1SNK906302R0000		50	1.30
		3 poles	41 A (IEC)		JB6-3	1SNK906303R0000		50	2.10
		4 poles	41 A (IEC)		JB6-4	1SNK906304R0000		50	2.90
		5 poles	41 A (IEC)		JB6-5	1SNK906305R0000		50	3.60
		10 poles	41 A (IEC)		JB6-10	1SNK906310R0000		20	7.40
3	**Test adapters**	For test plugs DIA 2 mm 0.079 in		Dark grey	TP2	1SNK900203R0000		20	1.70
		For test plugs DIA 4 mm 0.157 in			TP4	1SNK900205R0000		20	2.40
4	**Test connectors**	End module, 5.2 mm 0.205 in		Dark grey	TC5-R1	1SNK900201R0000		10	5.20
5	**Spacers**	0.8 mm	0.031 in	Dark grey	ES-TC6	1SNK900105R0000		10	0.80
6	**Terminal block markers**	Blank marker		White	MG-CPM 13 41791	1SNB041791R0612		1680	0.27
		Blank card			MC612	1SNK150000R0000		22	10.00
					MC612PA	1SNK159999R0000		20	11.00
		Universal wire markers holder		Grey	UMH	1SNK900611R0000		10	0.20

Complete list of accessories is indicated in the terminal block datasheet including end stops.
Some accessories such as jumper bars may modify the terminal block's ratings: Complete information available in the accessories section of the catalog.

1SNK161006S0201

Technical data valid for copper conductors only.

ZS4-SF-R screw clamp terminal blocks

For 5 x 20 fuses - with blown fuse indicator and test sockets - 6 mm 0.236 in spacing

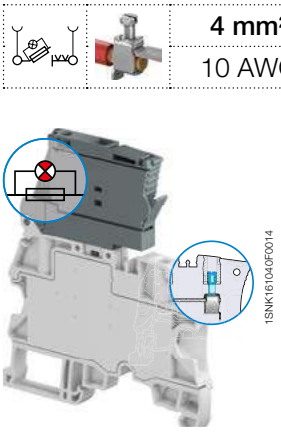

ZS4-SF-R

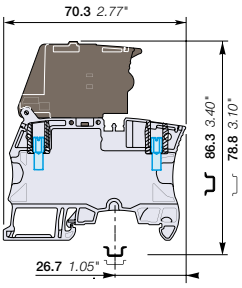

6 mm 0.236 in spacing

4 mm²
10 AWG

Description

- Protect your circuits with 5x20 fuse terminal blocks compliant with IEC 60947-7-3 standard (fuse not supplied with the terminal blocks),
- Simplify the distribution thanks to the two jumper channels aligned with ZS4 or ZS4-R2 feed-through and ZS4-S-R1 disconnect terminal blocks,
- Ease the test with built-in test socket screws,
- Quickly identify the defective circuit thanks to the blown fuse indicator (with leakage current < 0.5 mA).

Ordering details

Description		Color	Type	Part Number		Pkg qty	Weight (1 pce) g
Fuse	With blown fuse indicator 115 ... 250 V AC / DC and 2 test sockets DIA 2 mm 0.079 in	Grey, dark grey	ZS4-SF-R4	1SNK506416R0000		50	18.60
	With blown fuse indicator 24 ... 110 V AC / DC and 2 test sockets DIA 2 mm 0.079 in		ZS4-SF-R2	1SNK506413R0000		50	18.60

Main technical data

Connecting capacity		IEC	UL - CSA
1 conductor per clamp	Rigid - Solid / Stranded	0.2 ... 4 mm²	24 ... 10 AWG
	Flexible	0.22 ... 4 mm²	
	with non insulated ferrule	0.22 ... 4 mm²	24 ... 12 AWG
	with insulated ferrule	0.22 ... 4 mm²	24 ... 12 AWG
	Gauge	A3-B3	
2 conductors per clamp	Rigid - Solid / Stranded	0.2 ... 1.5 mm²	24 ... 16 AWG
	Flexible	0.2 ... 1.5 mm²	
	with twin ferrule	0.22 ... 1.5 mm²	24 ... 16 AWG
Rated current / Rated cross section		6.3 A / 4 mm²	10 A / 10 AWG
Rated voltage		500 V	150 V
Impulse withstand voltage		6000 V	
Protection		IP20	NEMA 1

Mounting instructions

Rail		TH 35-7.5, TH 35-15
Wire stripping length		10.5 mm 0.412 in
Tool		Flat screwdriver Ø 3.5 mm Ø 0.138 in
Torque		0.6 Nm ± 0.1 5.31 lb.in ± 0.885

Mount your fuse safely without touching any active part: put the fuse into the hooks of the fuse holder shutter; at the closing of the shutter, the fuse is perfectly in place in the fuse holder.

Separate arrangement		Assembly composed of 1 fuse terminal block in between non fuse terminal blocks	Overload and short-circuit protection	2.5 W
			Exclusive short-circuit protection	4 W
Compound arrangement		Assembly composed of 5 fuse terminal blocks	Overload and short-circuit protection	2.5 W
			Exclusive short-circuit protection	4 W

The connecting capacity data for one Rigid - Solid / Stranded - Flexible conductor (when applicable) is a mandatory information required by IEC, UL and CSA standards (Copper conductors). All other data are provided as supplementary information only. For more details, please consult our CB, UL or CSA certificates and technical datasheet available on http://www.TE.com

CE CB RoHS USR CNR CSA EAC BV DNV Rina

Accessories

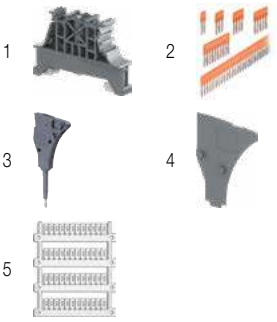

	Description			Color	Type	Part Number		Pkg qty	Weight (1 pce) g
1	**End stops**	10 mm	0.394 in	Dark grey	BAM4	1SNK900001R0000		50	14.00
2	**Jumper bars**	2 poles	41 A (IEC)	Orange	JB6-2	1SNK906302R0000		50	1.30
		3 poles	41 A (IEC)		JB6-3	1SNK906303R0000		50	2.10
		4 poles	41 A (IEC)		JB6-4	1SNK906304R0000		50	2.90
		5 poles	41 A (IEC)		JB6-5	1SNK906305R0000		50	3.60
		10 poles	41 A (IEC)		JB6-10	1SNK906310R0000		20	7.40
3	**Test connectors**	End module, 5.2 mm 0.205 in		Dark grey	TC5-R1	1SNK900201R0000		10	5.20
4	**Spacers**	0.8 mm	0.031 in	Dark grey	ES-TC6	1SNK900105R0000		10	0.80
5	**Terminal block markers**	Blank marker		White	MG-CPM 13 41791	1SNB041791R0612		1680	0.27
		Blank card			MC612	1SNK150000R0000		22	10.00
					MC612PA	1SNK159999R0000		20	11.00
		Universal wire markers holder		Grey	UMH	1SNK900611R0000		10	0.20

Complete list of accessories is indicated in the terminal block datasheet including end stops.
Some accessories such as jumper bars may modify the terminal block's ratings: Complete information available in the accessories section of the catalog.

1SNK161037S0201

Technical data valid for copper conductors only.

ZS4-R2 screw clamp terminal blocks
Feed-through - 6 mm 0.236 in spacing

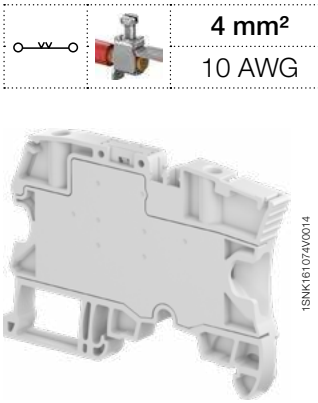

ZS4-R2

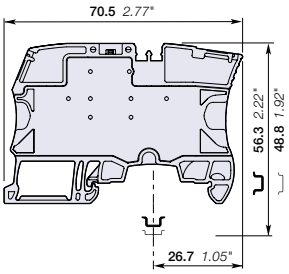

6 mm 0.236 in spacing

	4 mm²
	10 AWG

Description

- Simplify the distribution of circuits in marshalling cabinets thanks to our feed-through terminal blocks with the same profile as ZS4-SF fuse, ZS4-S-R1 disconnect and ZS4-PE-R2 ground terminal blocks: aligned conductor entries, jumper channels and marking in just 6 mm 0.236 in spacing,
- No end section needed: closed block.

Ordering details

Description		Color	Type	Part Number		Pkg qty	Weight (1 pce) g
Feed-through	Profile aligned with ZS4-SF and ZS4-S-R1	Grey	ZS4-R2	1SNK506013R0000		50	12.40

Main technical data

Connecting capacity		IEC	UL - CSA
1 conductor per clamp	Rigid - Solid / Stranded	0.2 ... 4 mm²	24 ... 10 AWG
	Flexible	0.22 ... 4 mm²	
	with non insulated ferrule	0.22 ... 4 mm²	24 ... 12 AWG
	with insulated ferrule	0.22 ... 4 mm²	24 ... 12 AWG
	Gauge	A3-B3	
2 conductors per clamp	Rigid - Solid / Stranded	0.2 ... 1.5 mm²	24 ... 16 AWG
	Flexible	0.2 ... 1.5 mm²	
	with twin ferrule	0.22 ... 1.5 mm²	24 ... 16 AWG
Rated current / Rated cross section		32 A / 4 mm²	30 A / 10 AWG
Rated short-time withstand current (1s)		480 A	
Rated voltage		800 V	300 V
Impulse withstand voltage		8000 V	
Protection		IP20	NEMA 1

Mounting instructions

Rail	TH 35-7.5, TH 35-15
Wire stripping length	10.5 mm 0.413 in
Tool	Flat screwdriver Ø 3.5 mm Ø 0.138 in
Torque	0.6 Nm ± 0.1 5.31 lb.in ± 0.885

The connecting capacity data for one Rigid - Solid / Stranded - Flexible conductor (when applicable) is a mandatory information required by IEC, UL and CSA standards (Copper conductors). All other data are provided as supplementary information only. For more details, please consult our CB, UL or CSA certificates and technical datasheet available on http://www.TE.com

CE, CB, RoHS, USR CNR, CSA, EAC, BV, DNV

Accessories

	Description			Color	Type	Part Number		Pkg qty	Weight (1 pce) g
1	**End stops**	10 mm	0.394 in	Dark grey	BAM4	1SNK900001R0000		50	14.00
2	**Jumper bars**	2 poles	41 A (IEC)	Orange	JB6-2	1SNK906302R0000		50	1.30
		3 poles	41 A (IEC)		JB6-3	1SNK906303R0000		50	2.10
		4 poles	41 A (IEC)		JB6-4	1SNK906304R0000		50	2.90
		5 poles	41 A (IEC)		JB6-5	1SNK906305R0000		50	3.60
		10 poles	41 A (IEC)		JB6-10	1SNK906310R0000		20	7.40
3	**Cross spacing jumpers**	3 poles	32 A (IEC)	Orange	JB85-3	1SNK900603R0000		10	2.80
4	**Test adapters**	For test plugs DIA 2 mm 0.079 in		Dark grey	TP2	1SNK900203R0000		20	1.70
		For test plugs DIA 4 mm 0.157 in			TP4	1SNK900205R0000		20	2.40
5	**Test connectors**	End module, 5.2 mm 0.205 in		Dark grey	TC5-R1	1SNK900201R0000		10	5.20
6	**Spacers**	0.8 mm	0.031 in	Dark grey	ES-TC6	1SNK900105R0000		10	0.80
7	**Terminal block markers**	Blank marker		White	MG-CPM 13 41791	1SNB041791R0612		1680	0.27
		Blank card			MC612	1SNK150000R0000		22	10.00
					MC612PA	1SNK159999R0000		20	11.00
		Universal wire markers holder		Grey	UMH	1SNK900611R0000		10	0.20

Complete list of accessories is indicated in the terminal block datasheet including end stops.
Some accessories such as jumper bars may modify the terminal block's ratings: Complete information available in the accessories section of the catalog.

ZS4-SF ZS4-S-R1

Screw clamp terminal blocks

Description		Color	Type	Part Number		Pkg qty	Weight (1 pce) g
Fuse	Profile aligned with ZS4-R2 and ZS4-PE-R2	Grey, dark grey	ZS4-SF	1SNK506410R0000		50	18.60
Disconnect	Profile aligned with ZS4-R2 and ZS4-PE-R2	Grey	ZS4-S-R1	1SNK506310R0000		50	13.20

1SNK161083S0201

Technical data valid for copper conductors only.

ZS4-PE-R2 screw clamp terminal blocks
Ground - 6 mm 0.236 in spacing

4 mm²
10 AWG

Description

Simplify the shielding connection of your analog circuits in marshalling cabinets thanks to our ground terminal blocks with the same profile as ZS4-SF fuse, ZS4-S-R1 disconnect and ZS4-R2 feed-through terminal blocks.

ZS4-PE-R2

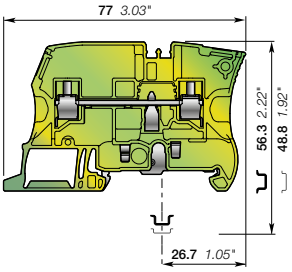

6 mm 0.236 in spacing

Ordering details

Description		Color	Type	Part Number		Pkg qty	Weight (1 pce) g
Ground	Screwless rail connection	Green-yellow	ZS4-PE-R2	1SNK506153R0000		25	15.30

Main technical data

Connecting capacity		IEC	UL - CSA
1 conductor per clamp	Rigid - Solid / Stranded	0.2 ... 4 mm²	24 ... 10 AWG
	Flexible	0.22 ... 4 mm²	
	with non insulated ferrule	0.22 ... 4 mm²	24 ... 12 AWG
	with insulated ferrule	0.22 ... 4 mm²	24 ... 12 AWG
	Gauge	A3-B3	
Rated cross section		4 mm²	10 AWG
Rated short-time withstand current (1s)		480 A	396 A
Protection		IP20	NEMA 1

Mounting instructions

Rail		TH 35-7.5, TH 35-15
Wire stripping length		10.5 mm 0.413 in
Tool		Flat screwdriver Ø 3.5 mm Ø 0.138 in
Torque		0.6 Nm ± 0.1 5.31 lb.in ± 0.885

The connecting capacity data for one Rigid - Solid / Stranded - Flexible conductor (when applicable) is a mandatory information required by IEC, UL and CSA standards (Copper conductors). All other data are provided as supplementary information only. For more details, please consult our CB, UL or CSA certificates and technical datasheet available on http://www.TE.com

CE, CB, RoHS, USR CNR, CSA, EAC, BV, DNV

3

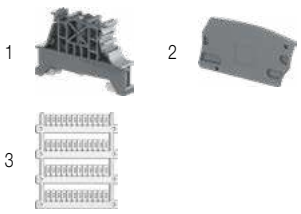

Accessories

	Description			Color	Type	Part Number		Pkg qty	Weight (1 pce) g
1	**End stops**	10 mm	0.394 in	Dark grey	BAM4	1SNK900001R0000		50	14.00
2	**End sections**	2.2 mm	0.087 in	Dark grey	ES6-4S	1SNK505911R0000		20	3.10
3	**Terminal block markers**	Blank marker		White	MG-CPM 13 41791	1SNB041791R0612		1680	0.27
		Blank card			MC612	1SNK150000R0000		22	10.00
					MC612PA	1SNK159999R0000		20	11.00
		Universal wire markers holder		Grey	UMH	1SNK900611R0000		10	0.20

Complete list of accessories is indicated in the terminal block datasheet including end stops.
Some accessories such as jumper bars may modify the terminal block's ratings: Complete information available in the accessories section of the catalog.

ZS4-SF ZS4-S-R1

Screw clamp terminal blocks

Description		Color	Type	Part Number		Pkg qty	Weight (1 pce) g
Fuse	Profile aligned with ZS4-R2 and ZS4-PE-R2	Grey, dark grey	ZS4-SF	1SNK506410R0000		50	18.60
Disconnect	Profile aligned with ZS4-R2 and ZS4-PE-R2	Grey	ZS4-S-R1	1SNK506310R0000		50	13.20

1SNK161079S0201

Technical data valid for copper conductors only.

ZS4-S-R2 screw clamp terminal blocks

Disconnect with lever - 6 mm 0.236 in spacing

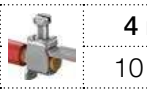

4 mm²

10 AWG

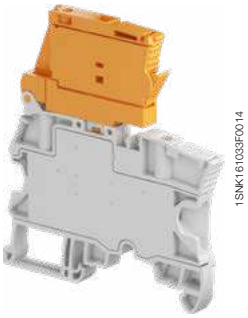

ZS4-S-R2

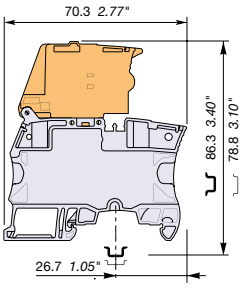

6 mm 0.236 in spacing

Description

Simplify the disconnect operations for the disconnect terminal blocks installed next to fuse terminal blocks ZS4-SF:

– With the same profile as ZS4-SF, the ZS4-S-R2 disconnect lever is easily operated by hand and the wiring of the alternated disconnect and fuse circuits is easier.

Ordering details

Description		Color	Type	Part Number		Pkg qty	Weight (1 pce) g
Disconnect	Profile aligned with ZS4-SF	Grey, orange	ZS4-S-R2	1SNK506414R0000		50	21.6

Main technical data

Connecting capacity		IEC	UL - CSA
1 conductor per clamp	Rigid - Solid / Stranded	0.2 ... 4 mm²	24 ... 10 AWG
	Flexible	0.22 ... 4 mm²	
	with non insulated ferrule	0.22 ... 4 mm²	24 ... 12 AWG
	with insulated ferrule	0.22 ... 4 mm²	24 ... 12 AWG
	Gauge	A3-B3	
2 conductors per clamp	Rigid - Solid / Stranded	0.2 ... 1.5 mm²	24 ... 16 AWG
	Flexible	0.2 ... 1.5 mm²	
	with twin ferrule	0.22 ... 1.5 mm²	24 ... 16 AWG
Rated current / Rated cross section		18 A / 2.5 mm²	13 A / 10 AWG
Maximum current / Maximum cross section		18 A / 4 mm²	
Rated short-time withstand current (1s)		300 A	
Rated voltage		400 V	150 V
Impulse withstand voltage		6000 V	
Protection		IP20	NEMA 1

Mounting instructions

Rail		TH 35-7.5, TH 35-15
Wire stripping length		10.5 mm 0.412 in
Tool		Flat screwdriver Ø 3.5 mm Ø 0.138 in
Torque		0.6 Nm ± 0.1 5.31 lb.in ± 0.885

Recommendation for best usage: in horizontal assemblies, disconnect terminal blocks should be mounted with fixed foot on top (power side) so that the disconnect lever does not partially close through gravity. Furthermore, as specified per IEC 60947-7-1, disconnect terminal blocks are intended to be used for temporary disconnection at zero potential and at no load.

The connecting capacity data for one Rigid - Solid / Stranded - Flexible conductor (when applicable) is a mandatory information required by IEC, UL and CSA standards (Copper conductors). All other data are provided as supplementary information only. For more details, please consult our CB, UL or CSA certificates and technical datasheet available on http://www.TE.com

CE CB RoHS USR CNR CSA EAC BV DNV Rina

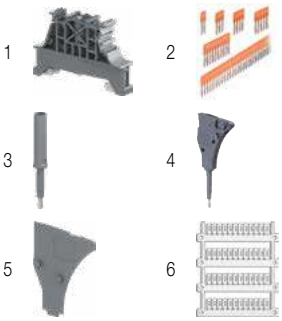

Accessories

	Description			Color	Type	Part Number		Pkg qty	Weight (1 pce) g
1	**End stops**	10 mm	0.394 in	Dark grey	BAM4	1SNK900001R0000		50	14.00
2	**Jumper bars**	2 poles	41 A (IEC)	Orange	JB6-2	1SNK906302R0000		50	1.30
		3 poles	41 A (IEC)		JB6-3	1SNK906303R0000		50	2.10
		4 poles	41 A (IEC)		JB6-4	1SNK906304R0000		50	2.90
		5 poles	41 A (IEC)		JB6-5	1SNK906305R0000		50	3.60
		10 poles	41 A (IEC)		JB6-10	1SNK906310R0000		20	7.40
3	**Test adapters**	For test plugs DIA 2 mm 0.079 in		Dark grey	TP2	1SNK900203R0000		20	1.70
		For test plugs DIA 4 mm 0.157 in			TP4	1SNK900205R0000		20	2.40
4	**Test connectors**	End module, 5.2 mm 0.205 in		Dark grey	TC5-R1	1SNK900201R0000		10	5.20
5	**Spacers**	0.8 mm	0.031 in	Dark grey	ES-TC6	1SNK900105R0000		10	0.80
6	**Terminal block markers**	Blank marker		White	MG-CPM 13 41791	1SNB041791R0612		1680	0.27
		Blank card			MC612	1SNK150000R0000		22	10.00
					MC612PA	1SNK159999R0000		20	11.00
		Universal wire markers holder		Grey	UMH	1SNK900611R0000		10	0.20

Complete list of accessories is indicated in the terminal block datasheet including end stops.
Some accessories such as jumper bars may modify the terminal block's ratings: Complete information available in the accessories section of the catalog.

Fuse screw clamp terminal blocks

Description	Color	Type	Part Number		Pkg qty	Weight (1 pce) g
Fuse	Grey, dark grey	ZS4-SF	1SNK506410R0000		50	18.60

1SNK161043S0201

Technical data valid for copper conductors only.

ZS10-SF screw clamp terminal blocks

For 6.3x32 fuses - 8 mm 0.315 in spacing

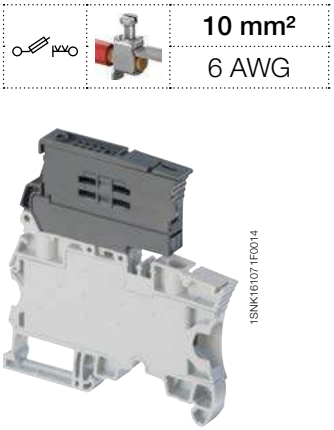

10 mm²	
6 AWG	

ZS10-SF

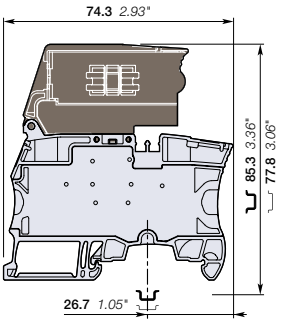

8 mm 0.315 in spacing

Description

- Protect your circuits with 6.3x32 (¼ x 1¼ in) fuse terminal blocks compliant with IEC 60947-7-3 standard (fuse not supplied with the terminal blocks),
- Simplify the distribution thanks to the two jumper channels.

Ordering details

Description		Color	Type	Part Number		Pkg qty	Weight (1 pce) g
Fuse	Closed block	Grey, dark grey	ZS10-SF	1SNK508418R0000		50	28.50

Main technical data

Connecting capacity		IEC	UL - CSA
1 conductor per clamp	Rigid - Solid / Stranded	0.5 ... 10 mm²	24 ... 6 AWG
	Flexible	0.5 ... 10 mm²	
	with non insulated ferrule	0.5 ... 10 mm²	24 ... 8 AWG
	with insulated ferrule	0.5 ... 6 mm²	24 ... 10 AWG
	Gauge	A5-B5	
2 conductors per clamp	Rigid - Solid / Stranded	0.5 ... 4 mm²	20 ... 12 AWG
	Flexible	0.5 ... 4 mm²	
	with twin ferrule	0.5 ... 4 mm²	20 ... 12 AWG
Rated current / Rated cross section		10 A / 10 mm²	22 A / 6 AWG
Rated voltage		630 V	600 V
Impulse withstand voltage		6000 V	
Protection		IP20	NEMA 1

Mounting instructions

Rail	TH 35-7.5, TH 35-15
Wire stripping length	13 mm 0.512 in
Tool	Flat screwdriver Ø 4 mm Ø 0.157 in
Torque	1.3 Nm ± 0.3 11.5 lb.in ± 2.65

Mount your fuse safely without touching any active part: put the fuse into the hooks of the fuse holder shutter; at the closing of the shutter, the fuse is perfectly in place in the fuse holder.

Separate arrangement	Assembly composed of 1 fuse terminal block in between non fuse terminal blocks	Overload and short-circuit protection	4 W
		Exclusive short-circuit protection	4 W
Compound arrangement	Assembly composed of 5 fuse terminal blocks	Overload and short-circuit protection	2.5 W
		Exclusive short-circuit protection	2.5 W

The connecting capacity data for one Rigid - Solid / Stranded - Flexible conductor (when applicable) is a mandatory information required by IEC, UL and CSA standards (Copper conductors). All other data are provided as supplementary information only. For more details, please consult our CB, UL or CSA certificates and technical datasheet available on http://www.TE.com

CE CB RoHS USR CNR CSA EAC BV DNV

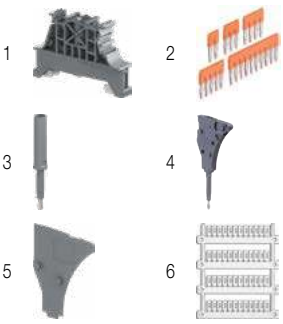

Accessories

	Description			Color	Type	Part Number		Pkg qty	Weight (1 pce) g
1	**End stops**	10 mm	0.394 in	Dark grey	BAM4	1SNK900001R0000		50	14.00
2	**Jumper bars**	2 poles	57 A (IEC)	Orange	JB8-2	1SNK908302R0000		50	2.70
		3 poles	57 A (IEC)		JB8-3	1SNK908303R0000		50	4.10
		4 poles	57 A (IEC)		JB8-4	1SNK908304R0000		50	5.60
		5 poles	57 A (IEC)		JB8-5	1SNK908305R0000		40	7.00
		10 poles	57 A (IEC)		JB8-10	1SNK908310R0000		20	14.20
3	**Test adapters**	For test plugs DIA 2 mm 0.079 in		Dark grey	TP2	1SNK900203R0000		20	1.70
		For test plugs DIA 4 mm 0.157 in			TP4	1SNK900205R0000		20	2.40
4	**Test connectors**	5.2 mm 0.205 in spacing		Dark grey	TC5	1SNK900200R0000		10	5.20
		End module, 5.2 mm 0.205 in			TC5-R1	1SNK900201R0000		10	5.20
5	**Spacers**	2.8 mm	0.110 in	Dark grey	ES-TC8	1SNK900104R0000		10	1.40
6	**Terminal block markers**	Blank marker		White	MG-CPM 13 41791	1SNB041791R0612		1680	0.27
		Blank card			MC812	1SNK160000R0000		22	10.00
					MC812PA	1SNK169999R0000		20	14.00
		Universal wire markers holder		Grey	UMH	1SNK900611R0000		10	0.20

Complete list of accessories is indicated in the terminal block datasheet including end stops.
Some accessories such as jumper bars may modify the terminal block's ratings: Complete information available in the accessories section of the catalog.

1SNK161052S0201

3

Technical data valid for copper conductors only.

ZS10-SF-R screw clamp terminal blocks

For 6.3x32 fuses - with blown fuse indicator - 8 mm 0.315 in spacing

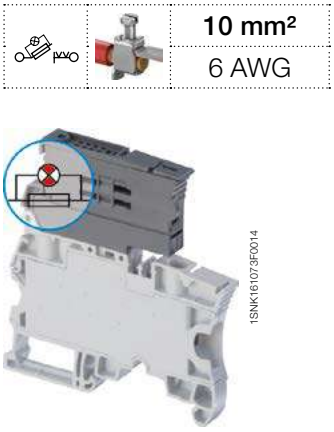

10 mm²	
6 AWG	

ZS10-SF-R

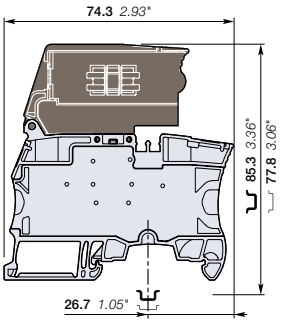

8 mm 0.315 in spacing

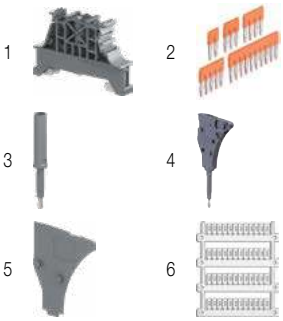

Description

- Protect your circuits with 6.3x32 (¼ x 1¼ in) fuse terminal blocks compliant with IEC 60947-7-3 standard (fuse not supplied with the terminal blocks),
- Quickly identify the defective circuit thanks to the blown fuse indicator (with leakage current < 0.5 mA).

Ordering details

Description		Color	Type	Part Number		Pkg qty	Weight (1 pce) g
Fuse	With blown fuse indicator 115 ... 250 V AC / DC	Grey, dark grey	ZS10-SF-R3	1SNK508422R0000		50	30.50
	With blown fuse indicator 24 ... 110 V AC / DC		ZS10-SF-R1	1SNK508421R0000		50	30.50

Main technical data

Connecting capacity		IEC	UL - CSA
1 conductor per clamp	Rigid - Solid / Stranded	0.5 ... 10 mm²	24 ... 6 AWG
	Flexible	0.5 ... 10 mm²	
	with non insulated ferrule	0.5 ... 10 mm²	24 ... 8 AWG
	with insulated ferrule	0.5 ... 6 mm²	24 ... 10 AWG
	Gauge	A5-B5	
2 conductors per clamp	Rigid - Solid / Stranded	0.5 ... 4 mm²	20 ... 12 AWG
	Flexible	0.5 ... 4 mm²	
	with twin ferrule	0.5 ... 4 mm²	20 ... 12 AWG
Rated current / Rated cross section		10 A / 10 mm²	22 A / 6 AWG
Rated voltage		630 V	600 V
Impulse withstand voltage		6000 V	
Protection		IP20	NEMA 1

Mounting instructions

Rail	TH 35-7.5, TH 35-15
Wire stripping length	13 mm 0.512 in
Tool	Flat screwdriver Ø 4 mm Ø 0.157 in
Torque	1.3 Nm ± 0.3 11.5 lb.in ± 2.65

Mount your fuse safely without touching any active part: put the fuse into the hooks of the fuse holder shutter; at the closing of the shutter, the fuse is perfectly in place in the fuse holder.

Separate arrangement		Assembly composed of 1 fuse terminal block in between non fuse terminal blocks	Overload and short-circuit protection	4 W
			Exclusive short-circuit protection	4 W
Compound arrangement		Assembly composed of 5 fuse terminal blocks	Overload and short-circuit protection	2.5 W
			Exclusive short-circuit protection	2.5 W

The connecting capacity data for one Rigid - Solid / Stranded - Flexible conductor (when applicable) is a mandatory information required by IEC, UL and CSA standards (Copper conductors). All other data are provided as supplementary information only. For more details, please consult our CB, UL or CSA certificates and technical datasheet available on http://www.TE.com

CE CB RoHS USR CNR CSA EAC BV DNV

Accessories

	Description			Color	Type	Part Number		Pkg qty	Weight (1 pce) g
1	**End stops**	10 mm	0.394 in	Dark grey	BAM4	1SNK900001R0000		50	14.00
2	**Jumper bars**	2 poles	57 A (IEC)	Orange	JB8-2	1SNK908302R0000		50	2.70
		3 poles	57 A (IEC)		JB8-3	1SNK908303R0000		50	4.10
		4 poles	57 A (IEC)		JB8-4	1SNK908304R0000		50	5.60
		5 poles	57 A (IEC)		JB8-5	1SNK908305R0000		40	7.00
		10 poles	57 A (IEC)		JB8-10	1SNK908310R0000		20	14.20
3	**Test adapters**	For test plugs DIA 2 mm 0.079 in		Dark grey	TP2	1SNK900203R0000		20	1.70
		For test plugs DIA 4 mm 0.157 in			TP4	1SNK900205R0000		20	2.40
4	**Test connectors**	5.2 mm 0.205 in spacing		Dark grey	TC5	1SNK900200R0000		10	5.20
		End module, 5.2 mm 0.205 in			TC5-R1	1SNK900201R0000		10	5.20
5	**Spacers**	2.8 mm	0.110 in	Dark grey	ES-TC8	1SNK900104R0000		10	1.40
6	**Terminal block markers**	Blank marker		White	MG-CPM 13 41791	1SNB041791R0612		1680	0.27
		Blank card			MC812	1SNK160000R0000		22	10.00
					MC812PA	1SNK169999R0000		20	14.00
		Universal wire markers holder		Grey	UMH	1SNK900611R0000		10	0.20

Complete list of accessories is indicated in the terminal block datasheet including end stops.
Some accessories such as jumper bars may modify the terminal block's ratings: Complete information available in the accessories section of the catalog.

1SNK161053S0201

Technical data valid for copper conductors only.

ZS10-S-R2 screw clamp terminal blocks

Disconnect with lever - 8 mm 0.315 in spacing

10 mm²

6 AWG

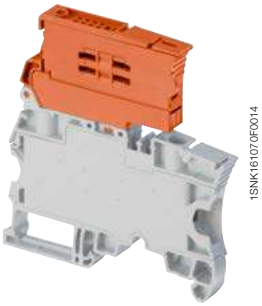

ZS10-S-R2

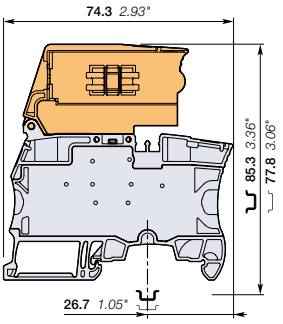

8 mm 0.315 in spacing

Description

Simplify the disconnect operations for the disconnect terminal blocks installed next to fuse terminal blocks ZS10-SF:

– With the same profile as ZS10-SF, the ZS10-S-R2 disconnect lever is easily operated by hand and the wiring of the alternated disconnect and fuse circuits is easier.

Ordering details

Description		Color	Type	Part Number		Pkg qty	Weight (1 pce) g
Disconnect	Profile aligned with ZS10-SF	Grey, orange	ZS10-S-R2	1SNK508417R0000		50	35.90

Main technical data

Connecting capacity		IEC	UL - CSA
1 conductor per clamp	Rigid - Solid / Stranded	0.5 ... 10 mm²	24 ... 6 AWG
	Flexible	0.5 ... 10 mm²	
	with non insulated ferrule	0.5 ... 10 mm²	24 ... 8 AWG
	with insulated ferrule	0.5 ... 6 mm²	24 ... 10 AWG
	Gauge	A5-B5	
2 conductors per clamp	Rigid - Solid / Stranded	0.5 ... 4 mm²	20 ... 12 AWG
	Flexible	0.5 ... 4 mm²	
	with twin ferrule	0.5 ... 4 mm²	20 ... 12 AWG
Rated current / Rated cross section		10 A / 4 mm²	22 A / 25 AWG
Maximum current / Maximum cross section		25 A / 10 mm²	
Rated short-time withstand current (1s)		480 A	
Rated voltage		630 V	600 V
Impulse withstand voltage		6000 V	
Protection		IP20	NEMA 1

Mounting instructions

Rail		TH 35-7.5, TH 35-15
Wire stripping length		13 mm 0.512 in
Tool		Flat screwdriver Ø 4 mm Ø 0.157 in
Torque		1.3 Nm ± 0.3 11.5 lb.in ± 2.65

Recommendation for best usage: in horizontal assemblies, disconnect terminal blocks should be mounted with fixed foot on top (power side) so that the disconnect lever does not partially close through gravity. Furthermore, as specified per IEC 60947-7-1, disconnect terminal blocks are intended to be used for temporary disconnection at zero potential and at no load.

The connecting capacity data for one Rigid - Solid / Stranded - Flexible conductor (when applicable) is a mandatory information required by IEC, UL and CSA standards (Copper conductors). All other data are provided as supplementary information only. For more details, please consult our CB, UL or CSA certificates and technical datasheet available on http://www.TE.com

CE | CB | RoHS | USR CNR | CSA | EAC | BV | DNV

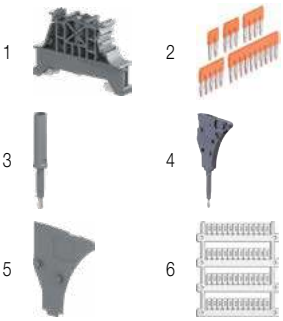

Accessories

	Description			Color	Type	Part Number		Pkg qty	Weight (1 pce) g
1	**End stops**	10 mm	0.394 in	Dark grey	BAM4	1SNK900001R0000		50	14.00
2	**Jumper bars**	2 poles	57 A (IEC)	Orange	JB8-2	1SNK908302R0000		50	2.70
		3 poles	57 A (IEC)		JB8-3	1SNK908303R0000		50	4.10
		4 poles	57 A (IEC)		JB8-4	1SNK908304R0000		50	5.60
		5 poles	57 A (IEC)		JB8-5	1SNK908305R0000		40	7.00
		10 poles	57 A (IEC)		JB8-10	1SNK908310R0000		20	14.20
3	**Test adapters**	For test plugs DIA 2 mm 0.079 in		Dark grey	TP2	1SNK900203R0000		20	1.70
		For test plugs DIA 4 mm 0.157 in			TP4	1SNK900205R0000		20	2.40
4	**Test connectors**	5.2 mm 0.205 in spacing		Dark grey	TC5	1SNK900200R0000		10	5.20
		End module, 5.2 mm 0.205 in			TC5-R1	1SNK900201R0000		10	5.20
5	**Spacers**	2.8 mm	0.110 in	Dark grey	ES-TC8	1SNK900104R0000		10	1.40
6	**Terminal block markers**	Blank marker		White	MG-CPM 13 41791	1SNB041791R0612		1680	0.27
		Blank card			MC812	1SNK160000R0000		22	10.00
					MC812PA	1SNK169999R0000		20	14.00
		Universal wire markers holder		Grey	UMH	1SNK900611R0000		10	0.20

Complete list of accessories is indicated in the terminal block datasheet including end stops.
Some accessories such as jumper bars may modify the terminal block's ratings: Complete information available in the accessories section of the catalog.

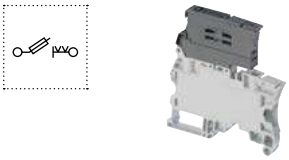

Fuse screw clamp terminal blocks

Description		Color	Type	Part Number		Pkg qty	Weight (1 pce) g
Fuse	Closed block	Grey, dark grey	ZS10-SF	1SNK508418R0000		50	28.50

1SNK161055S0201

Technical data valid for copper conductors only.

ZS4-D2 screw clamp terminal blocks

Double deck with 2 feed-through circuits - 5.2 mm 0.205 in spacing

4 mm²
12 AWG

ZS4-D2

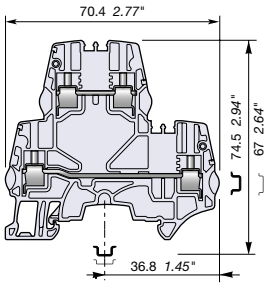

5.2 mm 0.205 in spacing

Description

- Save space with double deck terminal blocks: 2 independent circuits connected in just 5.2 mm 0.205 in spacing,
- Customize yourself the ZS4-D2 by soldering electronic components (up to 8.8 mm x 3.2 mm 0.346 x 0.125 in) in the existing linking bars punching.

Ordering details

Description		Color	Type	Part Number		Pkg qty	Weight (1 pce) g
Feed-through	2 feed-through circuits	Grey	ZS4-D2	1SNK505210R0000		50	15.30
		Blue	ZS4-D2-BL	1SNK505220R0000		50	15.30
		Orange	ZS4-D2-OR	1SNK505230R0000		50	15.30

Main technical data

Connecting capacity		IEC	UL - CSA
1 conductor per clamp	Rigid - Solid / Stranded	0.2 ... 4 mm²	24 ... 12 AWG
	Flexible	0.22 ... 4 mm²	
	with non insulated ferrule	0.22 ... 4 mm²	24 ... 12 AWG
	with insulated ferrule	0.22 ... 2.5 mm²	24 ... 14 AWG
	Gauge	A3-B3	
2 conductors per clamp	Rigid - Solid / Stranded	0.2 ... 1.5 mm²	24 ... 16 AWG
	Flexible	0.2 ... 1.5 mm²	
	with twin ferrule	0.22 ... 1.5 mm²	24 ... 16 AWG
Rated current / Rated cross section		29 A / 4 mm²	20 A / 12 AWG
Rated short-time withstand current (1s)		480 A	
Short Circuit Current Rating (with specific conditions)			100 kA
Rated voltage		800 V	300 V
Impulse withstand voltage		8000 V	
Protection		IP20	NEMA 1
Increased safety Ex e		440 V 29 A IEC/EN 60079-7 - IM2 II 2 GD Ex eb I/II/IIIC – 300 V 20 A UL 60079-7 - Class I, Zone 1, AEx e II, Ex e II U	

Mounting instructions

Rail		TH 35-7.5, TH 35-15
Wire stripping length		10 mm 0.393 in
Tool		Flat screwdriver Ø 3.5 mm Ø 0.138 in
Torque		0.6 Nm ± 0.1 5.31 lb.in ± 0.885

The connecting capacity data for one Rigid - Solid / Stranded - Flexible conductor (when applicable) is a mandatory information required by IEC, UL and CSA standards (Copper conductors). All other data are provided as supplementary information only. For more details, please consult our CB, UL or CSA certificates and technical datasheet available on http://www.TE.com

CE, CB, RoHS, USR CNR, CSA, EAC Ex, ATEX, IECEx, BR-Ex e II, Haz Loc, BV, DNV, Rina

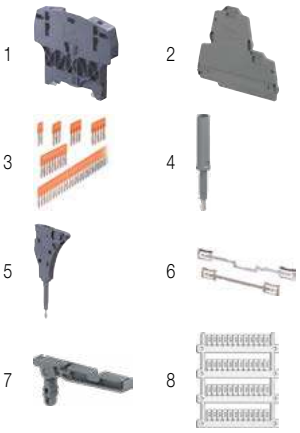

Accessories

	Description			Color	Type	Part Number		Pkg qty	Weight (1 pce) g
1	**End stops**	10 mm	0.394 in	Dark grey	BAZH1	1SNK900102R0000		20	24.00
2	**End sections**	2.55 mm	0.100 in	Dark grey	ES4-D2	1SNK505960R0000		20	4.10
3	**Jumper bars**	2 poles	32 A (IEC)	Orange	JB5-2	1SNK905302R0000		50	1.30
		3 poles	32 A (IEC)		JB5-3	1SNK905303R0000		50	2.00
		4 poles	32 A (IEC)		JB5-4	1SNK905304R0000		50	2.70
		5 poles	32 A (IEC)		JB5-5	1SNK905305R0000		50	3.50
		10 poles	32 A (IEC)		JB5-10	1SNK905310R0000		30	7.10
4	**Test adapters**	For test plugs DIA 2 mm 0.079 in		Dark grey	TP2	1SNK900203R0000		20	1.70
		For test plugs DIA 4 mm 0.157 in			TP4	1SNK900205R0000		20	2.40
5	**Test connectors**	5.2 mm 0.205 in spacing		Dark grey	TC5	1SNK900200R0000		10	5.20
		End module, 5.2 mm 0.205 in			TC5-R1	1SNK900201R0000		10	5.20
6	**Shield connectors**				SHB	1SNK900602R0000		20	4.90
7	**Label holders**			Dark grey	LH-J	1SNK900606R0000		100	0.73
8	**Terminal block markers**	Blank marker		White	MG-CPM 13 41790	1SNB041790R0512		1960	0.23
		Blank card			MC512	1SNK140000R0000		22	9.00
					MC512PA	1SNK149999R0000		20	10.00
		Universal wire markers holder		Grey	UMH	1SNK900611R0000		10	0.20

Complete list of accessories is indicated in the terminal block datasheet including end stops.
Some accessories such as jumper bars may modify the terminal block's ratings: Complete information available in the accessories section of the catalog.

1SNK161003S0201

Technical data valid for copper conductors only.

ZS4-D1 screw clamp terminal blocks

Double deck with 1 feed-through circuit - 5.2 mm 0.205 in spacing

4 mm²

12 AWG

Description

- Ease one potential distribution on 4 independent screw clamps,
- Save space by connecting conductors up to 4 mm² (CB certified) 12 AWG in just 5.2 mm 0.205 in spacing.

1SNK161015F0014

ZS4-D1

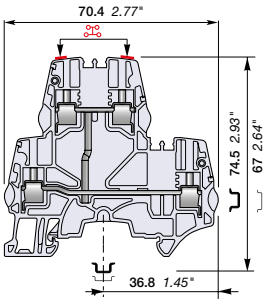

5.2 mm 0.205 in spacing

Ordering details

Description		Color	Type	Part Number		Pkg qty	Weight (1 pce) g
Feed-through	1 feed-through circuit	Grey	ZS4-D1	1SNK505211R0000		50	15.30

Main technical data

Connecting capacity		IEC	UL - CSA
1 conductor per clamp	Rigid - Solid / Stranded	0.2 ... 4 mm²	24 ... 12 AWG
	Flexible	0.22 ... 4 mm²	
	with non insulated ferrule	0.22 ... 4 mm²	24 ... 12 AWG
	with insulated ferrule	0.22 ... 2.5 mm²	24 ... 14 AWG
	Gauge	A3-B3	
2 conductors per clamp	Rigid - Solid / Stranded	0.2 ... 1.5 mm²	24 ... 16 AWG
	Flexible	0.2 ... 1.5 mm²	
	with twin ferrule	0.22 ... 1.5 mm²	24 ... 16 AWG
Rated current / Rated cross section		29 A / 4 mm²	20 A / 12 AWG
Rated short-time withstand current (1s)		480 A	
Short Circuit Current Rating (with specific conditions)			100 kA
Rated voltage		800 V	300 V
Impulse withstand voltage		8000 V	
Protection		IP20	NEMA 1
Increased safety Ex e		440 V 29 A IEC/EN 60079-7 - IM2 II 2 GD Ex eb I/II/IIIC – 300 V 20 A UL 60079-7 - Class I, Zone 1, AEx e II, Ex e II U	

The connecting capacity data for one Rigid - Solid / Stranded - Flexible conductor (when applicable) is a mandatory information required by IEC, UL and CSA standards (Copper conductors). All other data are provided as supplementary information only. For more details, please consult our CB, UL or CSA certificates and technical datasheet available on http://www.TE.com

CE, CB, RoHS, USR CNR, CSA, EAC Ex, ATEX, IECEx, BR-Ex e II, Haz Loc, BV, DNV, Rina

Mounting instructions

Rail	TH 35-7.5, TH 35-15
Wire stripping length	10 mm 0.393 in
Tool	Flat screwdriver Ø 3.5 mm Ø 0.138 in
Torque	0.6 Nm ± 0.1 5.31 lb.in ± 0.885

3

Accessories

	Description			Color	Type	Part Number		Pkg qty	Weight (1 pce) g
1	**End stops**	10 mm	0.394 in	Dark grey	BAZH1	1SNK900102R0000		20	24.00
2	**End sections**	2.55 mm	0.100 in	Dark grey	ES4-D2	1SNK505960R0000		20	4.10
3	**Jumper bars**	2 poles	32 A (IEC)	Orange	JB5-2	1SNK905302R0000		50	1.30
		3 poles	32 A (IEC)		JB5-3	1SNK905303R0000		50	2.00
		4 poles	32 A (IEC)		JB5-4	1SNK905304R0000		50	2.70
		5 poles	32 A (IEC)		JB5-5	1SNK905305R0000		50	3.50
		10 poles	32 A (IEC)		JB5-10	1SNK905310R0000		30	7.10
4	**Test adapters**	For test plugs DIA 2 mm 0.079 in		Dark grey	TP2	1SNK900203R0000		20	1.70
		For test plugs DIA 4 mm 0.157 in			TP4	1SNK900205R0000		20	2.40
5	**Test connectors**	5.2 mm 0.205 in spacing		Dark grey	TC5	1SNK900200R0000		10	5.20
		End module, 5.2 mm 0.205 in			TC5-R1	1SNK900201R0000		10	5.20
6	**Shield connectors**				SHB	1SNK900602R0000		20	4.90
7	**Label holders**			Dark grey	LH-J	1SNK900606R0000		100	0.73
8	**Terminal block markers**	Blank marker		White	MG-CPM 13 41790	1SNB041790R0512		1960	0.23
		Blank card			MC512	1SNK140000R0000		22	9.00
					MC512PA	1SNK149999R0000		20	10.00
		Universal wire markers holder		Grey	UMH	1SNK900611R0000		10	0.20

Complete list of accessories is indicated in the terminal block datasheet including end stops.
Some accessories such as jumper bars may modify the terminal block's ratings: Complete information available in the accessories section of the catalog.

1SNK161007S0201

Technical data valid for copper conductors only.

ZS6-D2 screw clamp terminal blocks

Double deck with 2 feed-through circuits - 6 mm 0.236 in spacing

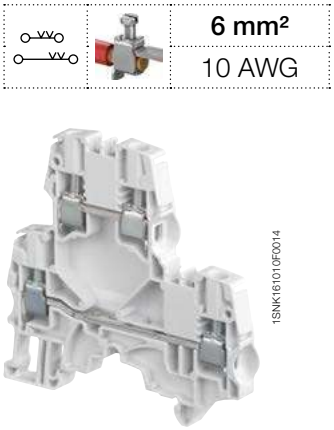

6 mm²
10 AWG

1SNK161010F0014

ZS6-D2

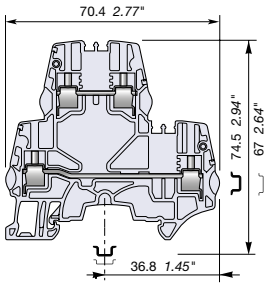

6 mm 0.236 in spacing

Description

- Save space with double deck terminal blocks: 2 independent circuits connected in just 6 mm 0.236 in spacing,
- Customize yourself the ZS6-D2 by soldering electronic components (up to 8.8 mm x 3.2 mm 0.346 x 0.125 in) in the existing linking bars punching,
- Boost the performances: ZS6-D... with ES4-D2 end section is rated 1000 V DC IEC, perfectly adapted to solar applications.

Ordering details

Description		Color	Type	Part Number		Pkg qty	Weight (1 pce) g
Feed-through	2 feed-through circuits	Grey	ZS6-D2	1SNK506210R0000		50	18.40
		Blue	ZS6-D2-BL	1SNK506220R0000		50	18.40
		Orange	ZS6-D2-OR	1SNK506230R0000		50	18.40
		Yellow	ZS6-D2-YL	1SNK506260R0000		50	18.40
		Red	ZS6-D2-RD	1SNK506262R0000		50	18.40
		White	ZS6-D2-WH	1SNK506265R0000		50	18.40
		Black	ZS6-D2-BK	1SNK506266R0000		50	18.40

Main technical data

Connecting capacity		IEC	UL - CSA
1 conductor per clamp	Rigid - Solid / Stranded	0.2 ... 6 mm²	24 ... 10 AWG
	Flexible	0.2 ... 6 mm²	
	with non insulated ferrule	0.22 ... 4 mm²	24 ... 12 AWG
	with insulated ferrule	0.22 ... 4 mm²	24 ... 12 AWG
	Gauge	A4-B3	
2 conductors per clamp	Rigid - Solid / Stranded	0.2 ... 2.5 mm²	24 ... 14 AWG
	Flexible	0.2 ... 2.5 mm²	
	with twin ferrule	0.22 ... 2.5 mm²	24 ... 14 AWG
Rated current / Rated cross section		40 A / 6 mm²	30 A / 10 AWG
Rated short-time withstand current (1s)		720 A	
Short Circuit Current Rating (with specific conditions)			100 kA
Rated voltage		800 V	300 V
Impulse withstand voltage		8000 V	
Protection		IP20	NEMA 1
Increased safety Ex e		440 V 40 A IEC/EN 60079-7 - IM2 II 2 GD Ex eb I/II/IIIC – 300 V 30 A UL 60079-7 - Class I, Zone 1, AEx e II, Ex e II U	

The connecting capacity data for one Rigid - Solid / Stranded - Flexible conductor (when applicable) is a mandatory information required by IEC, UL and CSA standards (Copper conductors). All other data are provided as supplementary information only. For more details, please consult our CB, UL or CSA certificates and technical datasheet available on http://www.TE.com

CE, CB, RoHS, USR CNR, CSA, EAC Ex, ATEX, IECEx, BR-Ex e II, Haz Loc, BV, DNV, Rina

Mounting instructions

Rail		TH 35-7.5, TH 35-15
Wire stripping length		10 mm 0.393 in
Tool		Flat screwdriver Ø 4 mm Ø 0.157 in
Torque		0.85 Nm ± 0.15 7.52 lb.in ± 1.33

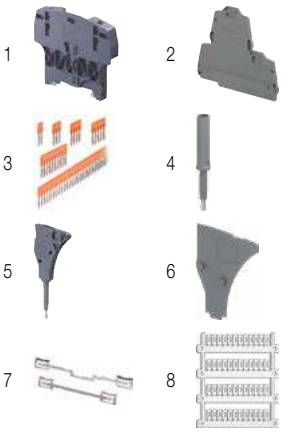

Accessories

	Description			Color	Type	Part Number		Pkg qty	Weight (1 pce) g
1	**End stops**	10 mm	0.394 in	Dark grey	BAZH1	1SNK900102R0000		20	24.00
2	**End sections**	2.55 mm	0.100 in	Dark grey	ES4-D2	1SNK505960R0000		20	4.10
3	**Jumper bars**	2 poles	41 A (IEC)	Orange	JB6-2	1SNK906302R0000		50	1.30
		3 poles	41 A (IEC)		JB6-3	1SNK906303R0000		50	2.10
		4 poles	41 A (IEC)		JB6-4	1SNK906304R0000		50	2.90
		5 poles	41 A (IEC)		JB6-5	1SNK906305R0000		50	3.60
		10 poles	41 A (IEC)		JB6-10	1SNK906310R0000		20	7.40
4	**Test adapters**	For test plugs DIA 2 mm 0.079 in		Dark grey	TP2	1SNK900203R0000		20	1.70
		For test plugs DIA 4 mm 0.157 in			TP4	1SNK900205R0000		20	2.40
5	**Test connectors**	End module, 5.2 mm 0.205 in		Dark grey	TC5-R1	1SNK900201R0000		10	5.20
6	**Spacers**	0.8 mm	0.031 in	Dark grey	ES-TC6	1SNK900105R0000		10	0.80
7	**Shield connectors**				SHB	1SNK900602R0000		20	4.90
8	**Terminal block markers**	Blank marker		White	MG-CPM 13 41791	1SNB041791R0612		1680	0.27
		Blank card			MC612	1SNK150000R0000		22	10.00
					MC612PA	1SNK159999R0000		20	11.00
		Universal wire markers holder		Grey	UMH	1SNK900611R0000		10	0.20

Complete list of accessories is indicated in the terminal block datasheet including end stops.
Some accessories such as jumper bars may modify the terminal block's ratings: Complete information available in the accessories section of the catalog.

Ground screw clamp terminal blocks

Description		Color	Type	Part Number		Pkg qty	Weight (1 pce) g
Ground	Profile aligned with ZS6-D2 and ZS6-D1	Green-yellow	ZS6-D1-PE	1SNK506250R0000		20	18.40

1SNK161014S0201

Technical data valid for copper conductors only.

ZS6-D1 screw clamp terminal blocks

Double deck with 1 feed-through circuit - 6 mm 0.236 in spacing

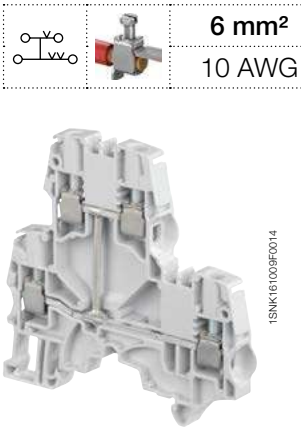

ZS6-D1

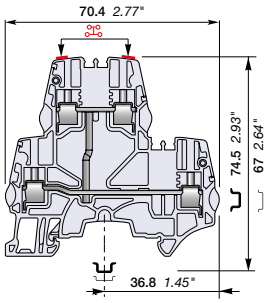

6 mm 0.236 in spacing

6 mm²
10 AWG

Description

- Ease one potential distribution on 4 independent screw clamps,
- Save space by connecting conductors up to 6 mm² 10 AWG in just 6 mm 0.236 in spacing,
- Boost the performances: ZS6-D... with ES4-D2 end section is rated 1000 V DC IEC, perfectly adapted to solar applications.

Ordering details

Description		Color	Type	Part Number		Pkg qty	Weight (1 pce) g
Feed-through	1 feed-through circuit	Grey	ZS6-D1	1SNK506211R0000		50	18.40
		Red	ZS6-D1-RD	1SNK506214R0000		50	18.40

Main technical data

Connecting capacity		IEC	UL - CSA
1 conductor per clamp	Rigid - Solid / Stranded	0.2 ... 6 mm²	24 ... 10 AWG
	Flexible	0.2 ... 6 mm²	
	with non insulated ferrule	0.22 ... 4 mm²	24 ... 12 AWG
	with insulated ferrule	0.22 ... 4 mm²	24 ... 12 AWG
	Gauge	A4-B3	
2 conductors per clamp	Rigid - Solid / Stranded	0.2 ... 2.5 mm²	24 ... 14 AWG
	Flexible	0.2 ... 2.5 mm²	
	with twin ferrule	0.22 ... 2.5 mm²	24 ... 14 AWG
Rated current / Rated cross section		40 A / 6 mm²	30 A / 10 AWG
Rated short-time withstand current (1s)		720 A	
Short Circuit Current Rating (with specific conditions)			100 kA
Rated voltage		800 V	300 V
Impulse withstand voltage		8000 V	
Protection		IP20	NEMA 1
Increased safety Ex e		440 V 40 A IEC/EN 60079-7 - IM2 II 2 GD Ex eb I/II/IIIC – 300 V 30 A UL 60079-7 - Class I, Zone 1, AEx e II, Ex e II U	

The connecting capacity data for one Rigid - Solid / Stranded - Flexible conductor (when applicable) is a mandatory information required by IEC, UL and CSA standards (Copper conductors). All other data are provided as supplementary information only. For more details, please consult our CB, UL or CSA certificates and technical datasheet available on http://www.TE.com

CE, CB, RoHS, USR CNR, CSA, EAC Ex, ATEX, IECEx, BR-Ex e II, Haz Loc, BV, DNV, Rina

Mounting instructions

Rail		TH 35-7.5, TH 35-15
Wire stripping length		10 mm 0.393 in
Tool		Flat screwdriver Ø 4 mm Ø 0.157 in
Torque		0.85 Nm ± 0.15 7.52 lb.in ± 1.33

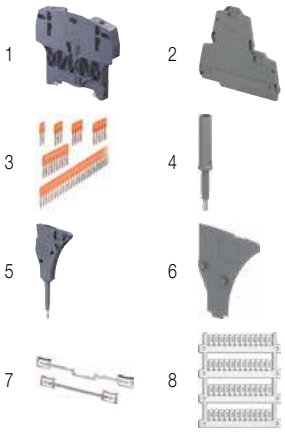

Accessories

	Description			Color	Type	Part Number		Pkg qty	Weight (1 pce) g
1	**End stops**	10 mm	0.394 in	Dark grey	BAZH1	1SNK900102R0000		20	24.00
2	**End sections**	2.55 mm	0.100 in	Dark grey	ES4-D2	1SNK505960R0000		20	4.10
3	**Jumper bars**	2 poles	41 A (IEC)	Orange	JB6-2	1SNK906302R0000		50	1.30
		3 poles	41 A (IEC)		JB6-3	1SNK906303R0000		50	2.10
		4 poles	41 A (IEC)		JB6-4	1SNK906304R0000		50	2.90
		5 poles	41 A (IEC)		JB6-5	1SNK906305R0000		50	3.60
		10 poles	41 A (IEC)		JB6-10	1SNK906310R0000		20	7.40
4	**Test adapters**	For test plugs DIA 2 mm 0.079 in		Dark grey	TP2	1SNK900203R0000		20	1.70
		For test plugs DIA 4 mm 0.157 in			TP4	1SNK900205R0000		20	2.40
5	**Test connectors**	End module, 5.2 mm 0.205 in		Dark grey	TC5-R1	1SNK900201R0000		10	5.20
6	**Spacers**	0.8 mm	0.031 in	Dark grey	ES-TC6	1SNK900105R0000		10	0.80
7	**Shield connectors**				SHB	1SNK900602R0000		20	4.90
8	**Terminal block markers**	Blank marker		White	MG-CPM 13 41791	1SNB041791R0612		1680	0.27
		Blank card			MC612	1SNK150000R0000		22	10.00
					MC612PA	1SNK159999R0000		20	11.00
		Universal wire markers holder		Grey	UMH	1SNK900611R0000		10	0.20

Complete list of accessories is indicated in the terminal block datasheet including end stops.
Some accessories such as jumper bars may modify the terminal block's ratings: Complete information available in the accessories section of the catalog.

1SNK161013S0201

Technical data valid for copper conductors only.

ZS6-D2-PE screw clamp terminal blocks

Double deck with 1 feed-through circuit and 1 ground circuit - 6 mm 0.236 in spacing

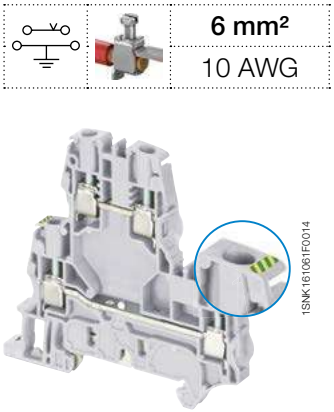

6 mm²
10 AWG

ZS6-D2-PE

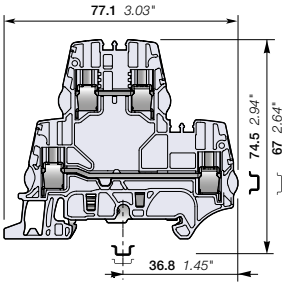

6 mm 0.236 in spacing

Description

- Save space with ZS6-D2-PE terminal blocks: 1 feed-through circuit and 1 ground circuit in just 6 mm 0.236 in spacing,
- Customize yourself the ZS6-D2-PE terminal blocks by soldering electronic components (up to 8.8 mm x 3.2 mm 0.346 x 0.125 in) in the existing linking bars punching.

Ordering details

Description		Color	Type	Part Number		Pkg qty	Weight (1 pce) g
Feed-through + ground	1 feed-through circuit and 1 ground circuit	Grey	ZS6-D2-PE	1SNK506212R0000		50	18.40

Main technical data

Connecting capacity		IEC	UL - CSA
1 conductor per clamp	Rigid - Solid / Stranded	0.2 ... 6 mm²	24 ... 10 AWG
	Flexible	0.22 ... 6 mm²	
	with non insulated ferrule	0.22 ... 4 mm²	24 ... 12 AWG
	with insulated ferrule	0.22 ... 4 mm²	24 ... 12 AWG
	Gauge	A4-B3	
2 conductors per clamp	Rigid - Solid / Stranded	0.2 ... 2.5 mm²	24 ... 14 AWG
	Flexible	0.2 ... 2.5 mm²	
	with twin ferrule	0.22 ... 2.5 mm²	24 ... 14 AWG
Rated current / Rated cross section		41 A / 6 mm²	30 A / 10 AWG
Rated short-time withstand current (1s)		720 A	
Short Circuit Current Rating (with specific conditions)			
Rated voltage		800 V	300 V
Impulse withstand voltage		8000 V	
Protection		IP20	NEMA 1

Mounting instructions

Rail	TH 35-7.5, TH 35-15
Wire stripping length	10 mm 0.393 in
Tool	Flat screwdriver Ø 4 mm Ø 0.157 in
Torque	0.85 Nm ± 0.15 7.52 lb.in ± 1.33

The connecting capacity data for one Rigid - Solid / Stranded - Flexible conductor (when applicable) is a mandatory information required by IEC, UL and CSA standards (Copper conductors). All other data are provided as supplementary information only. For more details, please consult our CB, UL or CSA certificates and technical datasheet available on http://www.TE.com

CE CB RoHS USR CSA EAC BV DNV

Accessories

	Description			Color	Type	Part Number		Pkg qty	Weight (1 pce) g
1	**End stops**	10 mm	0.394 in	Dark grey	BAZH1	1SNK900102R0000		20	24.00
2	**End sections**	2.55 mm	0.100 in	Dark grey	ES4-D2	1SNK505960R0000		20	4.10
3	**Jumper bars**	2 poles	41 A (IEC)	Orange	JB6-2	1SNK906302R0000		50	1.30
		3 poles	41 A (IEC)		JB6-3	1SNK906303R0000		50	2.10
		4 poles	41 A (IEC)		JB6-4	1SNK906304R0000		50	2.90
		5 poles	41 A (IEC)		JB6-5	1SNK906305R0000		50	3.60
		10 poles	41 A (IEC)		JB6-10	1SNK906310R0000		20	7.40
4	**Test adapters**	For test plugs DIA 4 mm 0.157 in		Dark grey	TP4	1SNK900205R0000		20	2.40
5	**Test connectors**	End module, 5.2 mm 0.205 in		Dark grey	TC5-R1	1SNK900201R0000		10	5.20
6	**Spacers**	0.8 mm	0.031 in	Dark grey	ES-TC6	1SNK900105R0000		10	0.80
7	**Terminal block markers**	Blank marker		White	MG-CPM 13 41791	1SNB041791R0612		1680	0.27
		Blank card			MC612	1SNK150000R0000		22	10.00
					MC612PA	1SNK159999R0000		20	11.00
		Universal wire markers holder		Grey	UMH	1SNK900611R0000		10	0.20

Complete list of accessories is indicated in the terminal block datasheet including end stops.
Some accessories such as jumper bars may modify the terminal block's ratings: Complete information available in the accessories section of the catalog.

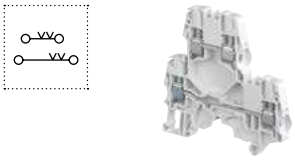

Feed-through screw clamp terminal blocks

Description		Color	Type	Part Number		Pkg qty	Weight (1 pce) g
Feed-through	2 feed-through circuits	Grey	ZS6-D2	1SNK506210R0000		50	18.40

1SNK161048S0201

Technical data valid for copper conductors only.

ZS6-D1-PE screw clamp terminal blocks

Double deck with 1 ground circuit - 6 mm 0.236 in spacing

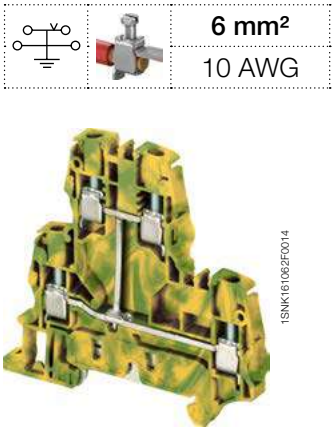

6 mm²	
10 AWG	

1SNK161062F0014

ZS6-D1-PE

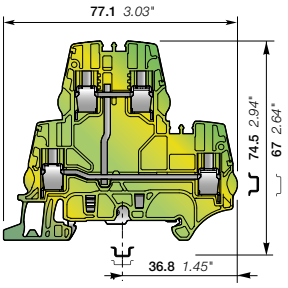

6 mm 0.236 in spacing

Description

- Save space with double deck ground terminal blocks aligned with ZS6-D2 double deck terminal blocks for convenient cabling process and circuit configuration,
- Benefit from our screwless rail connection: non operator independant, secured snap on or remove from the rail, performances above the requirements of IEC 60947-7-2 standard.

Ordering details

Description		Color	Type	Part Number		Pkg qty	Weight (1 pce) g
Ground	1 ground circuit	Green-yellow	ZS6-D1-PE	1SNK506250R0000		20	18.40

Main technical data

Connecting capacity		IEC	UL - CSA
1 conductor per clamp	Rigid - Solid / Stranded	0.2 ... 6 mm²	24 ... 10 AWG
	Flexible	0.22 ... 6 mm²	
	with non insulated ferrule	0.22 ... 4 mm²	24 ... 12 AWG
	with insulated ferrule	0.22 ... 4 mm²	24 ... 12 AWG
	Gauge	A4-B3	
Rated cross section		6 mm²	10 AWG
Rated short-time withstand current (1s)		720 A	
Protection		IP20	NEMA 1

Mounting instructions

Rail	TH 35-7.5, TH 35-15
Wire stripping length	10 mm 0.393 in
Tool	Flat screwdriver Ø 4 mm Ø 0.157 in
Torque	0.85 Nm ± 0.15 7.52 lb.in ± 1.33

The connecting capacity data for one Rigid - Solid / Stranded - Flexible conductor (when applicable) is a mandatory information required by IEC, UL and CSA standards (Copper conductors). All other data are provided as supplementary information only. For more details, please consult our CB, UL or CSA certificates and technical datasheet available on http://www.TE.com

CE CB RoHS USR CSA EAC BV DNV

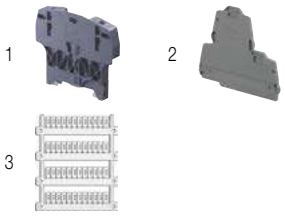

Accessories

	Description			Color	Type	Part Number		Pkg qty	Weight (1 pce) g
1	**End stops**	10 mm	0.394 in	Dark grey	BAZH1	1SNK900102R0000		20	24.00
2	**End sections**	2.55 mm	0.100 in	Dark grey	ES4-D2	1SNK505960R0000		20	4.10
3	**Terminal block markers**	Blank marker		White	MG-CPM 13 41791	1SNB041791R0612		1680	0.27
		Blank card			MC612	1SNK150000R0000		22	10.00
					MC612PA	1SNK159999R0000		20	11.00
		Universal wire markers holder		Grey	UMH	1SNK900611R0000		10	0.20

Complete list of accessories is indicated in the terminal block datasheet including end stops.
Some accessories such as jumper bars may modify the terminal block's ratings: Complete information available in the accessories section of the catalog.

1SNK161049S0201

Technical data valid for copper conductors only.

ZS4-D2-S screw clamp terminal blocks

Double deck with 1 disconnect circuit and 1 feed-through circuit - 5.2 mm 0.205 in spacing

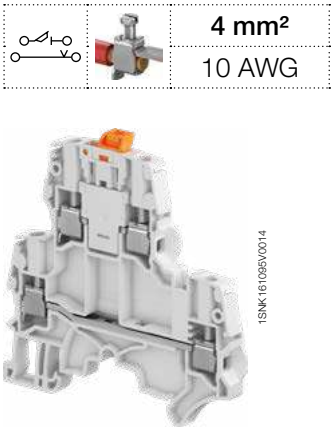

4 mm²	
10 AWG	

ZS4-D2-S

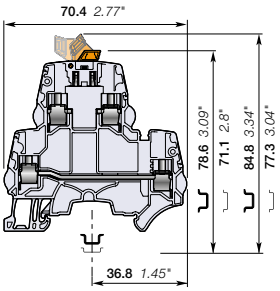

5.2 mm 0.205 in spacing

Description

- Save space: connect one complete circuit on a single block featuring disconnect and feed-through for the return circuit in just 5.2 mm 0.205 in spacing,
- Same profile as ZS4-D... double deck terminal blocks: convenient cabling process, aligned jumpers, markers and common end section.

Ordering details

Description		Color	Type	Part Number		Pkg qty	Weight (1 pce) g
Feed-through + disconnect	1 disconnect circuit and 1 feed-through circuit	Grey	ZS4-D2-S	1SNK505315R0000		50	15.90

Main technical data

Connecting capacity		IEC	UL - CSA
1 conductor per clamp	Rigid - Solid / Stranded	0.2 ... 4 mm²	24 ... 10 AWG
	Flexible	0.22 ... 4 mm²	
	with non insulated ferrule	0.22 ... 4 mm²	24 ... 12 AWG
	with insulated ferrule	0.22 ... 2.5 mm²	24 ... 14 AWG
	Gauge	A3-B3	
2 conductors per clamp	Rigid - Solid / Stranded	0.2 ... 1.5 mm²	24 ... 16 AWG
	Flexible	0.2 ... 1.5 mm²	
	with twin ferrule	0.22 ... 1.5 mm²	24 ... 16 AWG
Disconnect circuit			
Rated current / Rated cross section		25 A / 4 mm²	27 A / 10 AWG
Feed-through circuit			
Rated current / Rated cross section		29 A / 4 mm²	27 A / 10 AWG
Rated short-time withstand current (1s)		480 A	
Rated voltage		630 V	300 V
Impulse withstand voltage		8000 V	
Protection		IP20	NEMA 1

Mounting instructions

Rail		TH 35-7.5, TH 35-15
Wire stripping length		10.5 mm 0.413 in
Tool		Flat screwdriver Ø 3.5 mm Ø 0.138 in
Torque		0.6 Nm ± 0.1 5.31 lb.in ± 0.885

Recommendation for best usage: in horizontal assemblies, disconnect terminal blocks should be mounted with fixed foot on top (power side) so that the disconnect knife does not partially close through gravity. Furthermore, as specified per IEC 60947-7-1, disconnect terminal blocks are intended to be used for temporary disconnection at zero potential and at no load.

The connecting capacity data for one Rigid - Solid / Stranded - Flexible conductor (when applicable) is a mandatory information required by IEC, UL and CSA standards (Copper conductors). All other data are provided as supplementary information only. For more details, please consult our CB, UL or CSA certificates and technical datasheet available on http://www.TE.com

CE CB RoHS USR CSA EAC BV DNV

Accessories

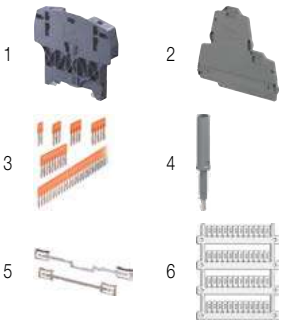

	Description			Color	Type	Part Number		Pkg qty	Weight (1 pce) g
1	**End stops**	10 mm	0.394 in	Dark grey	BAZH1	1SNK900102R0000		20	24.00
2	**End sections**	2.55 mm	0.100 in	Dark grey	ES4-D2	1SNK505960R0000		20	4.10
3	**Jumper bars**	2 poles	32 A (IEC)	Orange	JB5-2	1SNK905302R0000		50	1.30
		3 poles	32 A (IEC)		JB5-3	1SNK905303R0000		50	2.00
		4 poles	32 A (IEC)		JB5-4	1SNK905304R0000		50	2.70
		5 poles	32 A (IEC)		JB5-5	1SNK905305R0000		50	3.50
		10 poles	32 A (IEC)		JB5-10	1SNK905310R0000		30	7.10
		50 poles	32 A (IEC)		JB5-50	1SNK905350R0000		10	36.00
4	**Test adapters**	For test plugs DIA 2 mm 0.079 in		Dark grey	TP2	1SNK900203R0000		20	1.70
		For test plugs DIA 4 mm 0.157 in			TP4	1SNK900205R0000		20	2.40
5	**Shield connectors**				SHB	1SNK900602R0000		20	4.90
6	**Terminal block markers**	Blank marker		White	MG-CPM 13 41790	1SNB041790R0512		1960	0.23
		Blank card			MC512	1SNK140000R0000		22	9.00
					MC512PA	1SNK149999R0000		20	10.00
		Universal wire markers holder		Grey	UMH	1SNK900611R0000		10	0.20

Complete list of accessories is indicated in the terminal block datasheet including end stops.
Some accessories such as jumper bars may modify the terminal block's ratings: Complete information available in the accessories section of the catalog.

1SNK161074S0201

Technical data valid for copper conductors only.

ZS4-D2-S-T screw clamp terminal blocks

Double deck with 1 disconnect circuit with test socket screws and 1 feed-through circuit - 5.2 mm 0.205 in spacing

4 mm²
10 AWG

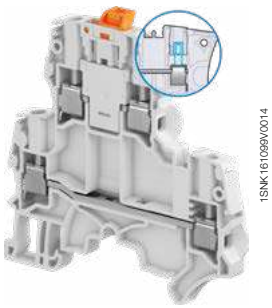

ZS4-D2-S-T

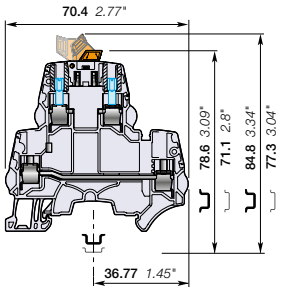

5.2 mm 0.205 in spacing

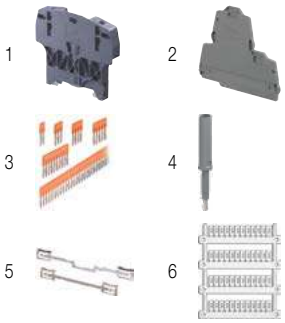

Description

Find the same functionalities as ZS4-D2-S, upgraded with the two built-in test socket screws meant to ease your signal testing during commissioning and maintenance.

Ordering details

Description		Color	Type	Part Number		Pkg qty	Weight (1 pce) g
Feed-through + disconnect	1 disconnect circuit with 2 test socket screws and 1 feed-through circuit	Grey	ZS4-D2-S-T2	1SNK505316R0000		50	16.20

Main technical data

Connecting capacity		IEC	UL - CSA
1 conductor per clamp	Rigid - Solid / Stranded	0.2 ... 4 mm²	24 ... 10 AWG
	Flexible	0.22 ... 4 mm²	
	with non insulated ferrule	0.22 ... 4 mm²	24 ... 12 AWG
	with insulated ferrule	0.22 ... 2.5 mm²	24 ... 14 AWG
	Gauge	A3-B3	
2 conductors per clamp	Rigid - Solid / Stranded	0.2 ... 1.5 mm²	24 ... 16 AWG
	Flexible	0.2 ... 1.5 mm²	
	with twin ferrule	0.22 ... 1.5 mm²	24 ... 16 AWG
Disconnect circuit			
Rated current / Rated cross section		25 A / 4 mm²	27 A / 10 AWG
Feed-through circuit			
Rated current / Rated cross section		29 A / 4 mm²	27 A / 10 AWG
Rated short-time withstand current (1s)		480 A	
Rated voltage		630 V	300 V
Impulse withstand voltage		8000 V	
Protection		IP20	NEMA 1

Mounting instructions

Rail		TH 35-7.5, TH 35-15
Wire stripping length		10.5 mm 0.413 in
Tool		Flat screwdriver Ø 3.5 mm Ø 0.138 in
Torque		0.6 Nm ± 0.1 5.31 lb.in ± 0.885

Recommendation for best usage: in horizontal assemblies, disconnect terminal blocks should be mounted with fixed foot on top (power side) so that the disconnect knife does not partially close through gravity. Furthermore, as specified per IEC 60947-7-1, disconnect terminal blocks are intended to be used for temporary disconnection at zero potential and at no load.

The connecting capacity data for one Rigid - Solid / Stranded - Flexible conductor (when applicable) is a mandatory information required by IEC, UL and CSA standards (Copper conductors). All other data are provided as supplementary information only. For more details, please consult our CB, UL or CSA certificates and technical datasheet available on http://www.TE.com

CE, CB, RoHS, USR, CSA, EAC, BV, DNV

Accessories

	Description			Color	Type	Part Number		Pkg qty	Weight (1 pce) g
1	**End stops**	10 mm	0.394 in	Dark grey	BAZH1	1SNK900102R0000		20	24.00
2	**End sections**	2.55 mm	0.100 in	Dark grey	ES4-D2	1SNK505960R0000		20	4.10
3	**Jumper bars**	2 poles	32 A (IEC)	Orange	JB5-2	1SNK905302R0000		50	1.30
		3 poles	32 A (IEC)		JB5-3	1SNK905303R0000		50	2.00
		4 poles	32 A (IEC)		JB5-4	1SNK905304R0000		50	2.70
		5 poles	32 A (IEC)		JB5-5	1SNK905305R0000		50	3.50
		10 poles	32 A (IEC)		JB5-10	1SNK905310R0000		30	7.10
		50 poles	32 A (IEC)		JB5-50	1SNK905350R0000		10	36.00
4	**Test adapters**	For test plugs DIA 2 mm 0.079 in		Dark grey	TP2	1SNK900203R0000		20	1.70
		For test plugs DIA 4 mm 0.157 in			TP4	1SNK900205R0000		20	2.40
5	**Shield connectors**				SHB	1SNK900602R0000		20	4.90
6	**Terminal block markers**	Blank marker		White	MG-CPM 13 41790	1SNB041790R0512		1960	0.23
		Blank card			MC512	1SNK140000R0000		22	9.00
					MC512PA	1SNK149999R0000		20	10.00
		Universal wire markers holder		Grey	UMH	1SNK900611R0000		10	0.20

Complete list of accessories is indicated in the terminal block datasheet including end stops.
Some accessories such as jumper bars may modify the terminal block's ratings: Complete information available in the accessories section of the catalog.

1SNK161075S0201

Technical data valid for copper conductors only.

ZS4-D2-SF1 screw clamp terminal blocks

Double deck with 1 fuse circuit and 1 feed-through circuit - 8 mm 0.315 in spacing

4 mm²
10 AWG

ZS4-D2-SF1

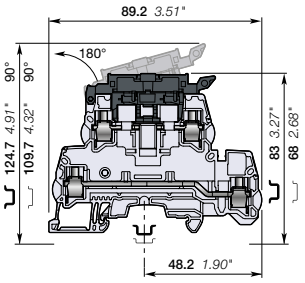

8 mm 0.315 in spacing

Description

- Save space: connect one complete circuit on a single block featuring fuse and feed-through for the return circuit,
- Protect your circuit with either 5X20 or 5X25 fuse (fuse not supplied with the terminal blocks),
- High performances product: compliant with IEC 60947-7-3 standard and jumper channel for the feed-through circuit.

Ordering details

Description		Color	Type	Part Number		Pkg qty	Weight (1 pce) g
Feed-through + fuse	1 fuse circuit and 1 feed-through circuit	Grey, dark grey	ZS4-D2-SF1	1SNK508425R0000		50	27.50

Main technical data

Connecting capacity		IEC	UL - CSA
1 conductor per clamp	Rigid - Solid / Stranded	0.2 ... 6 mm²	24 ... 10 AWG
	Flexible	0.22 ... 4 mm²	
	with non insulated ferrule	0.22 ... 4 mm²	24 ... 12 AWG
	with insulated ferrule	0.22 ... 4 mm²	24 ... 12 AWG
	Gauge	A3-B3	
2 conductors per clamp	Rigid - Solid / Stranded	0.2 ... 2.5 mm²	24 ... 14 AWG
	Flexible	0.2 ... 2.5 mm²	
	with twin ferrule	0.22 ... 2.5 mm²	24 ... 14 AWG
Disconnect circuit Rated current / Rated cross section		6.3 A / 4 mm²	12 A / 10 AWG
Feed-through circuit Rated current / Rated cross section		32 A / 4 mm²	30 A / 10 AWG
Rated voltage		800 V	300 V
Impulse withstand voltage		8000 V	
Protection		IP20	NEMA 1

Mounting instructions

Rail		TH 35-7.5, TH 35-15
Wire stripping length		11 mm 0.433 in
Tool		Flat screwdriver Ø 3.5 mm Ø 0.138 in
Torque		0.6 Nm ± 0.1 5.31 lb.in ± 0.885

Separate arrangement		Assembly composed of 1 fuse terminal block in between non fuse terminal blocks	Overload and short-circuit protection	2.5 W
			Exclusive short-circuit protection	4 W
Compound arrangement		Assembly composed of 5 fuse terminal blocks	Overload and short-circuit protection	1.6 W
			Exclusive short-circuit protection	4 W

The connecting capacity data for one Rigid - Solid / Stranded - Flexible conductor (when applicable) is a mandatory information required by IEC, UL and CSA standards (Copper conductors). All other data are provided as supplementary information only. For more details, please consult our CB, UL or CSA certificates and technical datasheet available on http://www.TE.com

CE CB RoHS USR CSA EAC BV DNV

Accessories

	Description			Color	Type	Part Number		Pkg qty	Weight (1 pce) g
1	**End stops**	10 mm	0.394 in	Dark grey	BAZH1	1SNK900102R0000		20	24.00
2	**End sections**	2.5 mm	0.098 in	Dark grey	ES4-D2-SF1	1SNK508911R0000		20	5.00
3	**Jumper bars**	2 poles	57 A (IEC)	Orange	JB8-2	1SNK908302R0000		50	2.70
		3 poles	57 A (IEC)		JB8-3	1SNK908303R0000		50	4.10
		4 poles	57 A (IEC)		JB8-4	1SNK908304R0000		50	5.60
		5 poles	57 A (IEC)		JB8-5	1SNK908305R0000		40	7.00
		10 poles	57 A (IEC)		JB8-10	1SNK908310R0000		20	14.20
4	**Lateral jumper bars**	10 poles	35 A (IEC)	Grey	PC81-10	1SNA173523R1100		10	5.00
5	**Test adapters**	For test plugs DIA 2 mm 0.079 in		Dark grey	TP2	1SNK900203R0000		20	1.70
		For test plugs DIA 4 mm 0.157 in			TP4	1SNK900205R0000		20	2.40
6	**Test connectors**	5.2 mm 0.205 in spacing		Dark grey	TC5	1SNK900200R0000		10	5.20
		End module, 5.2 mm 0.205 in			TC5-R1	1SNK900201R0000		10	5.20
7	**Spacers**	2.8 mm	0.110 in	Dark grey	ES-TC8	1SNK900104R0000		10	1.40
8	**Assembly rods**	2 poles			TGA8	1SNA168672R1100		10	1.00
		3 poles			TGA8	1SNA168673R1200		10	1.50
		4 poles			TGA8	1SNA168674R1300		10	2.00
9	**Terminal block markers**	Blank marker		White	MG-CPM 13 41791	1SNB041791R0612		1680	0.27
		Blank card			MC812	1SNK160000R0000		22	10.00
					MC812PA	1SNK169999R0000		20	14.00
		Universal wire markers holder		Grey	UMH	1SNK900611R0000		10	0.20

Complete list of accessories is indicated in the terminal block datasheet including end stops.
Some accessories such as jumper bars may modify the terminal block's ratings: Complete information available in the accessories section of the catalog.

1SNK161076S0201

Technical data valid for copper conductors only.

ZS4-D2-SF1-R screw clamp terminal blocks

Double deck with 1 fuse circuit with blown fuse indicator and 1 feed-through circuit - 8 mm 0.315 in spacing

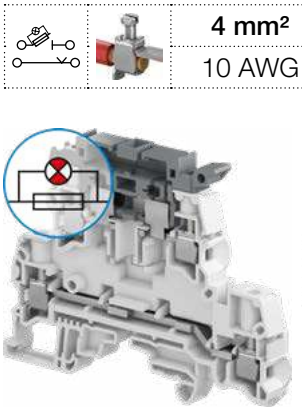

1SNK161097V0014

ZS4-D2-SF1-R

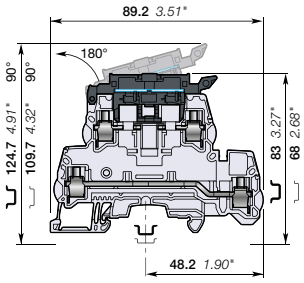

8 mm 0.315 in spacing

4 mm²
10 AWG

Description

- Find the same functionalities as ZS4-D2-SF1, upgraded with our integrated blown fuse indicator (with leakage current < 0.5 mA),
- Only one part number needed to fit AC / DC 24 V up to 110 V.

Ordering details

Description		Color	Type	Part Number		Pkg qty	Weight (1 pce) g
Feed-through + fuse	1 fuse circuit with blown fuse indicator 115 ... 250 V AC / DC and 1 feed-through circuit	Grey, dark grey	ZS4-D2-SF1-R3	1SNK508424R0000		50	29.40
	1 fuse circuit with blown fuse indicator 24 ... 110 V AC / DC and 1 feed-through circuit		ZS4-D2-SF1-R1	1SNK508423R0000		50	29.40

Main technical data

Connecting capacity		IEC	UL - CSA
1 conductor per clamp	Rigid - Solid / Stranded	0.2 ... 6 mm²	24 ... 10 AWG
	Flexible	0.22 ... 4 mm²	
	with non insulated ferrule	0.22 ... 4 mm²	24 ... 12 AWG
	with insulated ferrule	0.22 ... 4 mm²	24 ... 12 AWG
	Gauge	A3-B3	
2 conductors per clamp	Rigid - Solid / Stranded	0.2 ... 2.5 mm²	24 ... 14 AWG
	Flexible	0.2 ... 2.5 mm²	
	with twin ferrule	0.22 ... 2.5 mm²	24 ... 14 AWG
Disconnect circuit Rated current / Rated cross section		6.3 A / 4 mm²	12 A / 10 AWG
Feed-through circuit Rated current / Rated cross section		32 A / 4 mm²	30 A / 10 AWG
Rated voltage		800 V	300 V
Impulse withstand voltage		8000 V	
Protection		IP20	NEMA 1

Mounting instructions

Rail	TH 35-7.5, TH 35-15
Wire stripping length	11 mm 0.433 in
Tool	Flat screwdriver Ø 3.5 mm Ø 0.138 in
Torque	0.6 Nm ± 0.1 5.31 lb.in ± 0.885

Separate arrangement	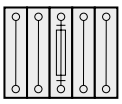	Assembly composed of 1 fuse terminal block in between non fuse terminal blocks	Overload and short-circuit protection	2.5 W
			Exclusive short-circuit protection	4 W
Compound arrangement	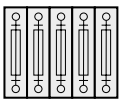	Assembly composed of 5 fuse terminal blocks	Overload and short-circuit protection	1.6 W
			Exclusive short-circuit protection	4 W

The connecting capacity data for one Rigid - Solid / Stranded - Flexible conductor (when applicable) is a mandatory information required by IEC, UL and CSA standards (Copper conductors). All other data are provided as supplementary information only. For more details, please consult our CB, UL or CSA certificates and technical datasheet available on http://www.TE.com

CE CB RoHS USR CSA EAC BV DNV

Accessories

	Description			Color	Type	Part Number		Pkg qty	Weight (1 pce) g
1	**End stops**	10 mm	0.394 in	Dark grey	BAZH1	1SNK900102R0000		20	24.00
2	**End sections**	2.5 mm	0.098 in	Dark grey	ES4-D2-SF1	1SNK508911R0000		20	5.00
3	**Jumper bars**	2 poles	57 A (IEC)	Orange	JB8-2	1SNK908302R0000		50	2.70
		3 poles	57 A (IEC)		JB8-3	1SNK908303R0000		50	4.10
		4 poles	57 A (IEC)		JB8-4	1SNK908304R0000		50	5.60
		5 poles	57 A (IEC)		JB8-5	1SNK908305R0000		40	7.00
		10 poles	57 A (IEC)		JB8-10	1SNK908310R0000		20	14.20
4	**Lateral jumper bars**	10 poles	35 A (IEC)	Grey	PC81-10	1SNA173523R1100		10	5.00
5	**Test adapters**	For test plugs DIA 2 mm 0.079 in		Dark grey	TP2	1SNK900203R0000		20	1.70
		For test plugs DIA 4 mm 0.157 in			TP4	1SNK900205R0000		20	2.40
6	**Test connectors**	5.2 mm 0.205 in spacing		Dark grey	TC5	1SNK900200R0000		10	5.20
		End module, 5.2 mm 0.205 in			TC5-R1	1SNK900201R0000		10	5.20
7	**Spacers**	2.8 mm	0.110 in	Dark grey	ES-TC8	1SNK900104R0000		10	1.40
8	**Assembly rods**	2 poles			TGA8	1SNA168672R1100		10	1.00
		3 poles			TGA8	1SNA168673R1200		10	1.50
		4 poles			TGA8	1SNA168674R1300		10	2.00
9	**Terminal block markers**	Blank marker		White	MG-CPM 13 41791	1SNB041791R0612		1680	0.27
		Blank card			MC812	1SNK160000R0000		22	10.00
					MC812PA	1SNK169999R0000		20	14.00
		Universal wire markers holder		Grey	UMH	1SNK900611R0000		10	0.20

Complete list of accessories is indicated in the terminal block datasheet including end stops.
Some accessories such as jumper bars may modify the terminal block's ratings: Complete information available in the accessories section of the catalog.

1SNK161077S0201

Technical data valid for copper conductors only.

3

ZS4-T3 screw clamp terminal blocks

Triple deck with 3 feed-through circuits - 5.2 mm 0.205 in spacing

4 mm²

12 AWG

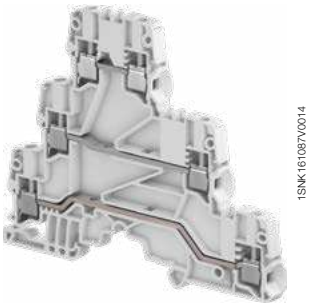

1SNK161087V0014

ZS4-T3

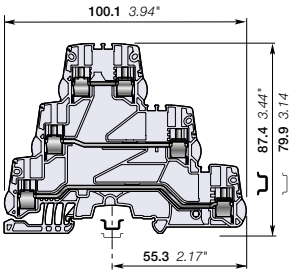

5.2 mm 0.205 in spacing

Description

Save space: 3 independent circuits in just 5.2 mm 0.205 in spacing,

– Fit many applications: space constraints, multiple signals distribution, sensors distribution, thanks to the jumper channels available on each deck.

Ordering details

Description		Color	Type	Part Number		Pkg qty	Weight (1 pce) g
Feed-through	3 feed-through circuits	Grey	ZS4-T3	1SNK505212R0000		25	24.40

Main technical data

Connecting capacity		IEC	UL - CSA
1 conductor per clamp	Rigid - Solid / Stranded	0.2 ... 4 mm²	24 ... 12 AWG
	Flexible	0.22 ... 4 mm²	
	with non insulated ferrule	0.22 ... 4 mm²	24 ... 12 AWG
	with insulated ferrule	0.22 ... 2.5 mm²	24 ... 14 AWG
	Gauge	A3-B3	
2 conductors per clamp	Rigid - Solid / Stranded	0.2 ... 1.5 mm²	24 ... 16 AWG
	Flexible	0.2 ... 1.5 mm²	
	with twin ferrule	0.22 ... 1.5 mm²	24 ... 16 AWG
Rated current / Rated cross section		32 A / 4 mm²	20 A / 12 AWG
Rated short-time withstand current (1s)		480 A	
Rated voltage		800 V	300 V
Impulse withstand voltage		8000 V	
Protection		IP20	NEMA 1

Mounting instructions

Rail		TH 35-7.5, TH 35-15
Wire stripping length		10.5 mm 0.413 in
Tool		Flat screwdriver Ø 3.5 mm Ø 0.138 in
Torque		0.6 Nm ± 0.1 5.31 lb.in ± 0.885

The connecting capacity data for one Rigid - Solid / Stranded - Flexible conductor (when applicable) is a mandatory information required by IEC, UL and CSA standards (Copper conductors). All other data are provided as supplementary information only. For more details, please consult our CB, UL or CSA certificates and technical datasheet available on http://www.TE.com

CE CB RoHS USR CSA EAC BV DNV

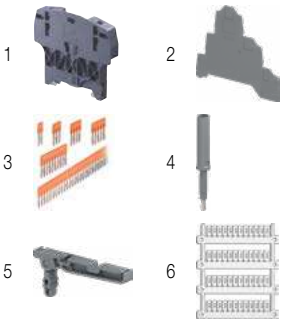

Accessories

	Description			Color	Type	Part Number		Pkg qty	Weight (1 pce) g
1	**End stops**	10 mm	0.394 in	Dark grey	BAZH1	1SNK900102R0000		20	24.00
2	**End sections**	0.8 mm	0.031 in	Dark grey	ES4-T3	1SNK505961R0000		20	4.20
3	**Jumper bars**	2 poles	32 A (IEC)	Orange	JB5-2	1SNK905302R0000		50	1.30
		3 poles	32 A (IEC)		JB5-3	1SNK905303R0000		50	2.00
		4 poles	32 A (IEC)		JB5-4	1SNK905304R0000		50	2.70
		5 poles	32 A (IEC)		JB5-5	1SNK905305R0000		50	3.50
		10 poles	32 A (IEC)		JB5-10	1SNK905310R0000		30	7.10
		50 poles	32 A (IEC)		JB5-50	1SNK905350R0000		10	36.00
4	**Test adapters**	For test plugs DIA 2 mm 0.079 in		Dark grey	TP2	1SNK900203R0000		20	1.70
		For test plugs DIA 4 mm 0.157 in			TP4	1SNK900205R0000		20	2.40
5	**Label holders**			Dark grey	LH-J	1SNK900606R0000		100	0.73
6	**Terminal block markers**	Blank marker		White	MG-CPM 13 41790	1SNB041790R0512		1960	0.23
		Blank card			MC512	1SNK140000R0000		22	9.00
					MC512PA	1SNK149999R0000		20	10.00
		Universal wire markers holder		Grey	UMH	1SNK900611R0000		10	0.20

Complete list of accessories is indicated in the terminal block datasheet including end stops.
Some accessories such as jumper bars may modify the terminal block's ratings: Complete information available in the accessories section of the catalog.

1SNK161072S0201

Technical data valid for copper conductors only.

ZS4-T3-R1 screw clamp terminal blocks

Triple deck with 3 feed-through circuits - 6 mm 0.236 in spacing

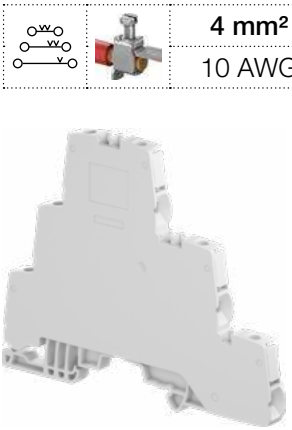

4 mm²
10 AWG

1SNK161088V0014

ZS4-T3-R1

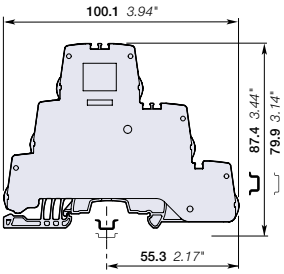

6 mm 0.236 in spacing

Description

Unique triple deck solution combining increased connecting capacity (up to 4 mm² with ferrule) and jumper channel available on each deck,

- Fit many applications: space constraints, multiple signals distribution, sensors distribution,
- Closed terminal block: no end section needed, optimized rigidity.

Ordering details

Description		Color	Type	Part Number		Pkg qty	Weight (1 pce) g
Feed-through	Closed block with 3 feed-through circuits	Grey	ZS4-T3-R1	1SNK506213R0000		50	28.30

Main technical data

Connecting capacity		IEC	UL - CSA
1 conductor per clamp	Rigid - Solid / Stranded	0.2 ... 4 mm²	24 ... 10 AWG
	Flexible	0.22 ... 4 mm²	
	with non insulated ferrule	0.22 ... 4 mm²	24 ... 12 AWG
	with insulated ferrule	0.22 ... 4 mm²	24 ... 12 AWG
	Gauge	A3-B3	
2 conductors per clamp	Rigid - Solid / Stranded	0.2 ... 1.5 mm²	24 ... 16 AWG
	Flexible	0.2 ... 1.5 mm²	
	with twin ferrule	0.22 ... 1.5 mm²	24 ... 16 AWG
Rated current / Rated cross section		32 A / 4 mm²	30 A / 10 AWG
Rated short-time withstand current (1s)		480 A	
Rated voltage		800 V	300 V
Impulse withstand voltage		8000 V	
Protection		IP20	NEMA 1

Mounting instructions

Rail		TH 35-7.5, TH 35-15
Wire stripping length		10.5 mm 0.413 in
Tool		Flat screwdriver Ø 3.5 mm Ø 0.138 in
Torque		0.6 Nm ± 0.1 5.31 lb.in ± 0.885

The connecting capacity data for one Rigid - Solid / Stranded - Flexible conductor (when applicable) is a mandatory information required by IEC, UL and CSA standards (Copper conductors). All other data are provided as supplementary information only. For more details, please consult our CB, UL or CSA certificates and technical datasheet available on http://www.TE.com

CE CB RoHS USR CSA EAC BV DNV

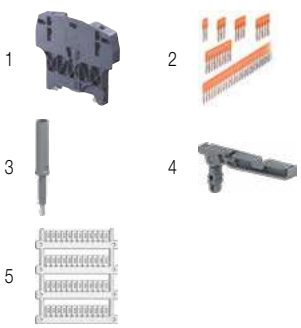

Accessories

	Description			Color	Type	Part Number		Pkg qty	Weight (1 pce) g
1	**End stops**	10 mm	0.394 in	Dark grey	BAZH1	1SNK900102R0000		20	24.00
2	**Jumper bars**	2 poles	41 A (IEC)	Orange	JB6-2	1SNK906302R0000		50	1.30
		3 poles	41 A (IEC)		JB6-3	1SNK906303R0000		50	2.10
		4 poles	41 A (IEC)		JB6-4	1SNK906304R0000		50	2.90
		5 poles	41 A (IEC)		JB6-5	1SNK906305R0000		50	3.60
		10 poles	41 A (IEC)		JB6-10	1SNK906310R0000		20	7.40
3	**Test adapters**	For test plugs DIA 2 mm 0.079 in		Dark grey	TP2	1SNK900203R0000		20	1.70
		For test plugs DIA 4 mm 0.157 in			TP4	1SNK900205R0000		20	2.40
4	**Label holders**			Dark grey	LH-J	1SNK900606R0000		100	0.73
5	**Terminal block markers**	Blank marker		White	MG-CPM 13 41791	1SNB041791R0612		1680	0.27
		Blank card			MC512	1SNK140000R0000		22	9.00
					MC512PA	1SNK149999R0000		20	10.00
		Universal wire markers holder		Grey	UMH	1SNK900611R0000		10	0.20

Complete list of accessories is indicated in the terminal block datasheet including end stops.
Some accessories such as jumper bars may modify the terminal block's ratings: Complete information available in the accessories section of the catalog.

1SNK161073S0201

Technical data valid for copper conductors only.

ZS4-D-CH-UD screw clamp terminal blocks
Component holder - 5.2 mm 0.205 in spacing

4 mm²
12 AWG

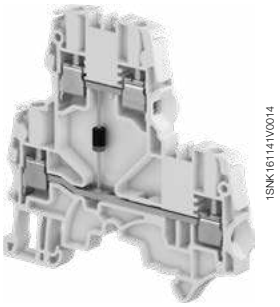

ZS4-D-CH

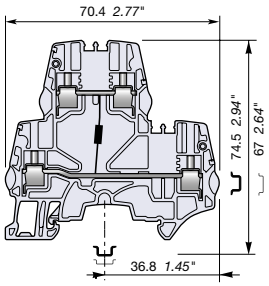

5.2 mm 0.205 in spacing

Description

Protect your circuit with one 1N4007 diode.

Ordering details

Description		Color	Type	Part Number		Pkg qty	Weight (1 pce) g
Component holder	Cathode of the blocking diode connected to the lower circuit	Grey	ZS4-D-CH-UD	1SNK505214R0000		50	15.30

Main technical data

Connecting capacity		IEC	UL - CSA
1 conductor per clamp	Rigid - Solid / Stranded	0.2 ... 4 mm²	24 ... 12 AWG
	Flexible	0.22 ... 4 mm²	
	with non insulated ferrule	0.22 ... 4 mm²	24 ... 12 AWG
	with insulated ferrule	0.22 ... 2.5 mm²	24 ... 14 AWG
	Gauge	A3-B3	
2 conductors per clamp	Rigid - Solid / Stranded	0.2 ... 1.5 mm²	24 ... 16 AWG
	Flexible	0.2 ... 1.5 mm²	
	with twin ferrule	0.22 ... 1.5 mm²	24 ... 16 AWG
Rated current / Rated cross section		29 A / 4 mm²	20 A / 12 AWG
Rated short-time withstand current (1s)		480 A	
Short Circuit Current Rating (with specific conditions)			
Rated voltage		800 V	300 V
Impulse withstand voltage			
Protection		IP20	NEMA 1

Mounting instructions

Rail	TH 35-7.5, TH 35-15
Wire stripping length	10 mm 0.393 in
Tool	Flat screwdriver Ø 3.5 mm Ø 0.138 in
Torque	0.6 Nm ± 0.1 5.31 lb.in ± 0.885

The connecting capacity data for one Rigid - Solid / Stranded - Flexible conductor (when applicable) is a mandatory information required by IEC, UL and CSA standards (Copper conductors). All other data are provided as supplementary information only. For more details, please consult our CB, UL or CSA certificates and technical datasheet available on http://www.TE.com

CE RoHS USR CNR CSA EAC

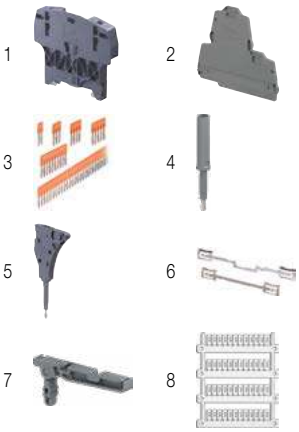

Accessories

	Description			Color	Type	Part Number		Pkg qty	Weight (1 pce) g
1	**End stops**	10 mm	0.394 in	Dark grey	BAZH1	1SNK900102R0000		20	24.00
2	**End sections**	2.55 mm	0.100 in	Dark grey	ES4-D2	1SNK505960R0000		20	4.10
3	**Jumper bars**	2 poles	32 A (IEC)	Orange	JB5-2	1SNK905302R0000		50	1.30
		3 poles	32 A (IEC)		JB5-3	1SNK905303R0000		50	2.00
		4 poles	32 A (IEC)		JB5-4	1SNK905304R0000		50	2.70
		5 poles	32 A (IEC)		JB5-5	1SNK905305R0000		50	3.50
		10 poles	32 A (IEC)		JB5-10	1SNK905310R0000		30	7.10
4	**Test adapters**	For test plugs DIA 2 mm 0.079 in		Dark grey	TP2	1SNK900203R0000		20	1.70
		For test plugs DIA 4 mm 0.157 in			TP4	1SNK900205R0000		20	2.40
5	**Test connectors**	5.2 mm 0.205 in spacing		Dark grey	TC5	1SNK900200R0000		10	5.20
		End module, 5.2 mm 0.205 in			TC5-R1	1SNK900201R0000		10	5.20
6	**Shield connectors**				SHB	1SNK900602R0000		20	4.90
7	**Label holders**			Dark grey	LH-J	1SNK900606R0000		100	0.73
8	**Terminal block markers**	Blank marker		White	MG-CPM 13 41790	1SNB041790R0512		1960	0.23
		Blank card			MC512	1SNK140000R0000		22	9.00
					MC512PA	1SNK149999R0000		20	10.00
		Universal wire markers holder		Grey	UMH	1SNK900611R0000		10	0.20

Complete list of accessories is indicated in the terminal block datasheet including end stops.
Some accessories such as jumper bars may modify the terminal block's ratings: Complete information available in the accessories section of the catalog.

1SNK161090S0201

Technical data valid for copper conductors only.

ZS4-D-CH-DU screw clamp terminal blocks
Component holder - 5.2 mm 0.205 in spacing

ZS4-D-CH

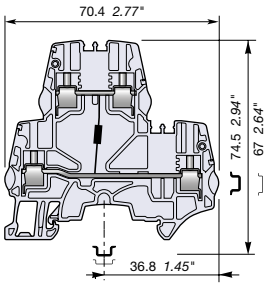

5.2 mm 0.205 in spacing

		4 mm²
		12 AWG

Description

Protect your circuit with one 1N4007 diode.

Ordering details

Description		Color	Type	Part Number		Pkg qty	Weight (1 pce) g
Component holder	Cathode of the blocking diode connected to the upper circuit	Grey	ZS4-D-CH-DU	1SNK505215R0000		50	15.30

Main technical data

Connecting capacity		IEC	UL - CSA
1 conductor per clamp	Rigid - Solid / Stranded	0.2 ... 4 mm²	24 ... 12 AWG
	Flexible	0.22 ... 4 mm²	
	with non insulated ferrule	0.22 ... 4 mm²	24 ... 12 AWG
	with insulated ferrule	0.22 ... 2.5 mm²	24 ... 14 AWG
	Gauge	A3-B3	
2 conductors per clamp	Rigid - Solid / Stranded	0.2 ... 1.5 mm²	24 ... 16 AWG
	Flexible	0.2 ... 1.5 mm²	
	with twin ferrule	0.22 ... 1.5 mm²	24 ... 16 AWG
Rated current / Rated cross section		29 A / 4 mm²	20 A / 12 AWG
Rated short-time withstand current (1s)		480 A	
Short Circuit Current Rating (with specific conditions)			
Rated voltage		800 V	300 V
Impulse withstand voltage			
Protection		IP20	NEMA 1

Mounting instructions

Rail	TH 35-7.5, TH 35-15
Wire stripping length	10 mm 0.393 in
Tool	Flat screwdriver Ø 3.5 mm Ø 0.138 in
Torque	0.6 Nm ± 0.1 5.31 lb.in ± 0.885

The connecting capacity data for one Rigid - Solid / Stranded - Flexible conductor (when applicable) is a mandatory information required by IEC, UL and CSA standards (Copper conductors). All other data are provided as supplementary information only. For more details, please consult our CB, UL or CSA certificates and technical datasheet available on http://www.TE.com

CE RoHS USR CNR CSA EAC

3

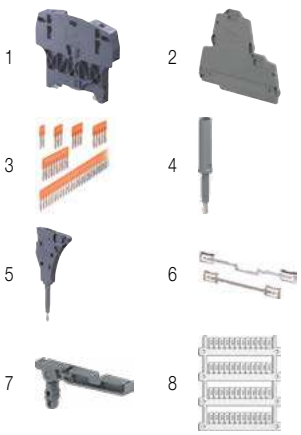

Accessories

	Description			Color	Type	Part Number		Pkg qty	Weight (1 pce) g
1	**End stops**	10 mm	0.394 in	Dark grey	BAZH1	1SNK900102R0000		20	24.00
2	**End sections**	2.55 mm	0.100 in	Dark grey	ES4-D2	1SNK505960R0000		20	4.10
3	**Jumper bars**	2 poles	32 A (IEC)	Orange	JB5-2	1SNK905302R0000		50	1.30
		3 poles	32 A (IEC)		JB5-3	1SNK905303R0000		50	2.00
		4 poles	32 A (IEC)		JB5-4	1SNK905304R0000		50	2.70
		5 poles	32 A (IEC)		JB5-5	1SNK905305R0000		50	3.50
		10 poles	32 A (IEC)		JB5-10	1SNK905310R0000		30	7.10
		50 poles	32 A (IEC)		JB5-50	1SNK905350R0000		10	36.00
4	**Test adapters**	For test plugs DIA 2 mm 0.079 in		Dark grey	TP2	1SNK900203R0000		20	1.70
		For test plugs DIA 4 mm 0.157 in			TP4	1SNK900205R0000		20	2.40
5	**Test connectors**	5.2 mm 0.205 in spacing		Dark grey	TC5	1SNK900200R0000		10	5.20
		End module, 5.2 mm 0.205 in			TC5-R1	1SNK900201R0000		10	5.20
6	**Shield connectors**				SHB	1SNK900602R0000		20	4.90
7	**Label holders**			Dark grey	LH-J	1SNK900606R0000		100	0.73
8	**Terminal block markers**	Blank marker		White	MG-CPM 13 41790	1SNB041790R0512		1960	0.23
		Blank card			MC512	1SNK140000R0000		22	9.00
					MC512PA	1SNK149999R0000		20	10.00
		Universal wire markers holder		Grey	UMH	1SNK900611R0000		10	0.20

Complete list of accessories is indicated in the terminal block datasheet including end stops.
Some accessories such as jumper bars may modify the terminal block's ratings: Complete information available in the accessories section of the catalog.

1SNK161091S0201

Technical data valid for copper conductors only.

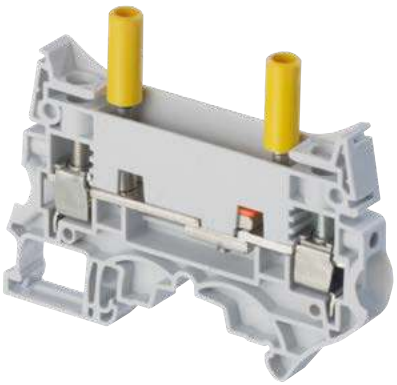

Secure your measurement operations

The new ZS10-ST test & measurement terminal blocks benefit from our long experience in the energy applications and from the SNK features: performances, ergonomy, common accessories and marking.

High performances

- 10 mm² 6 AWG
- 6 mm² 10 AWG with ferrule
- 50 A (IEC) 53 A (UL
- Worldwide certifications

RoHS

Rely on our smart design

Insulated short circuit bridges:
SC-JB8

Insulated captive test sockets:
AJS9
6 colors
compatible with standard
DIA. 4 mm test plugs
(IEC 60010-031)

Circuit separators: CS
For visual separation between
CT & PT circuits

Protecting cover kits: KCO

New ground terminal block:
ZS10-PE-R1

Lateral jumper bar: PC8
For CT or PT commoning

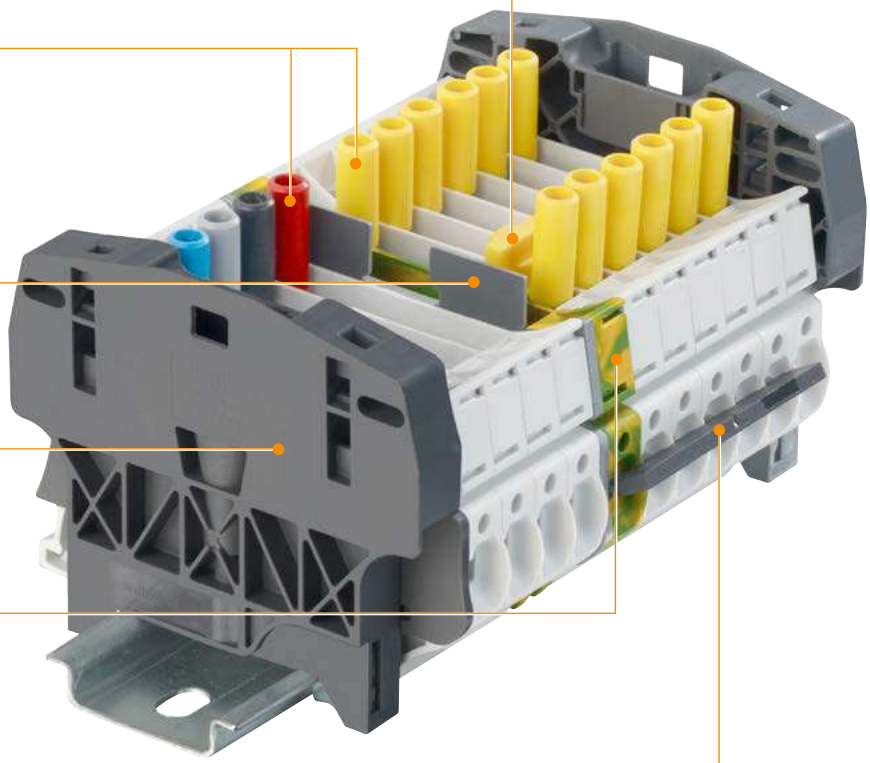

1SNK160057S0201

Assembly with protecting cover

Drilling and centering guide

Guarantee access only to authorized operators

cover can be permanently sealed with a seal or cable tie.

Centering drilling guide for seal or cable tie.

The cover is specially designed to ease its mounting or removal:

– Hook shape on each side for convenient removal with screwdriver

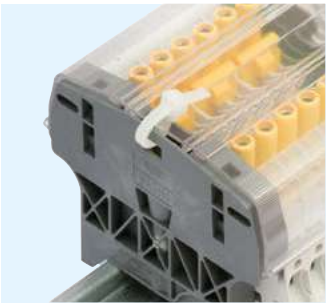

Seal with cable tie

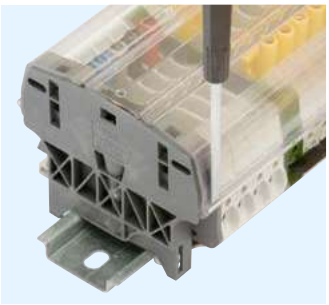

Convenient removal with screwdriver

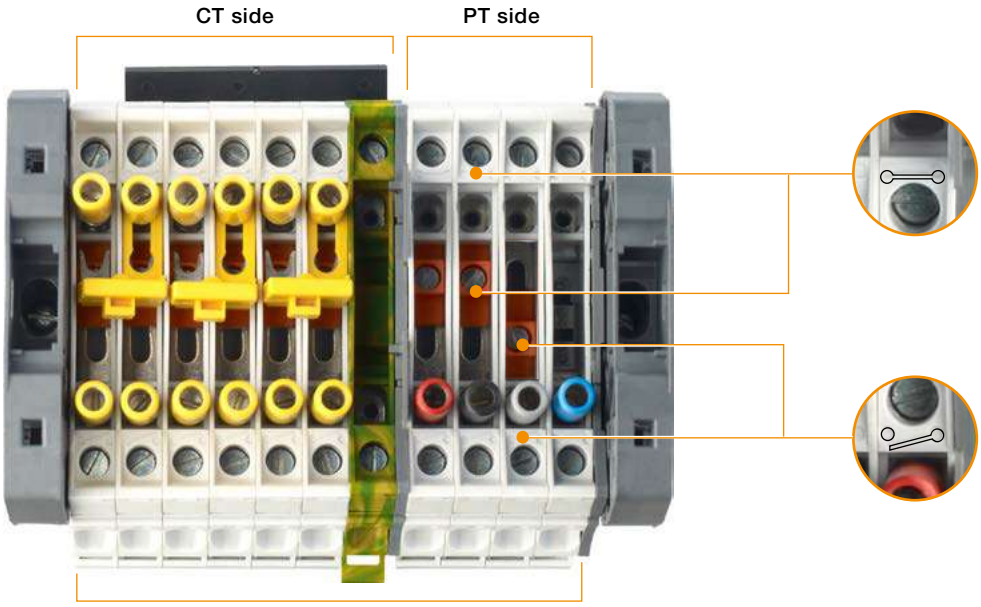

sliding link status: closed

Disconnect sliding link status:
Open and close symbols help to visualize the sliding link position

sliding link status: opened

Short-circuit CT circuits safely and conveniently

1. Fully operated by screwdriver (DIA 3.5 mm)
2. Short-circuited position secured thanks to AJS9 test sockets tightening
3. Adapted hook shape maintain the bridge on terminal block in the non connected position

1SNK160057S0201

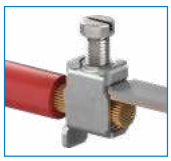

Common point on the transformers

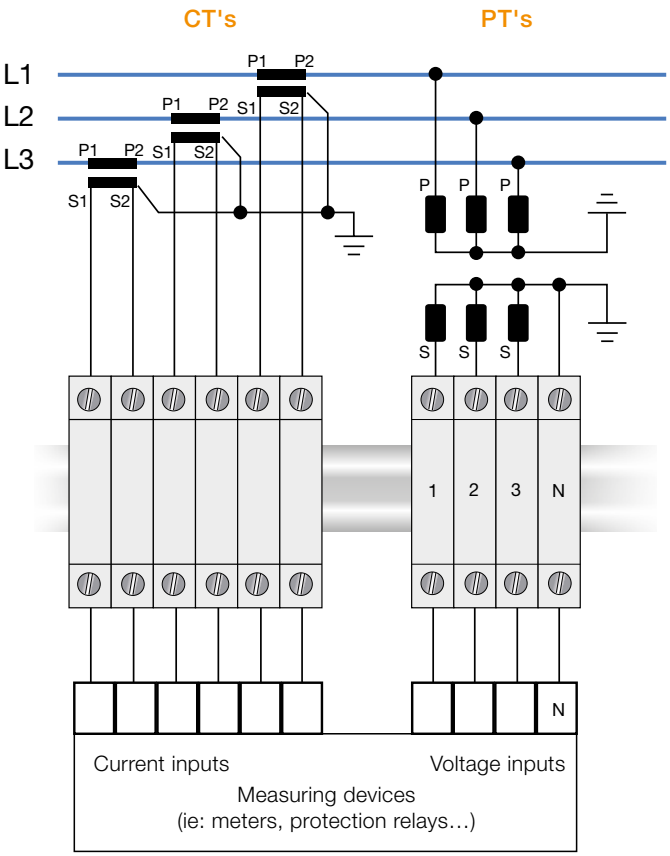

Bill of material optimized

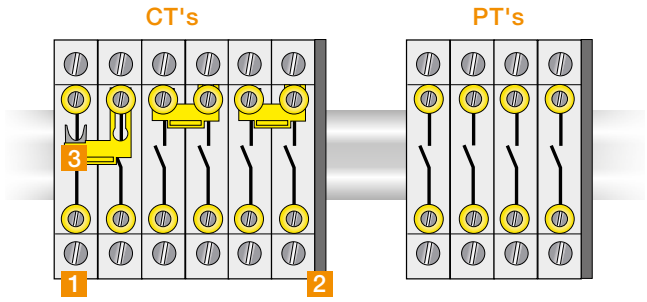

Description	Type	Order code	Qty needed	
			CT's	PT's
1 Terminal block	ZS10-ST-T4	1SNK508311R0000	6	4
2 End section	ES10-ST	1SNK508910R0000	1	1
3 Short-circuit bridges	SC-JB8-2	1SNK900652R0000	3	0

Bill of material with convenient customization (test sockets, feed-through terminals…)

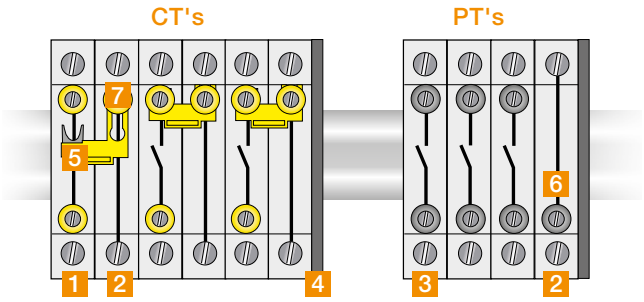

Description	Type	Order code	Qty needed	
			CT's	PT's
1 Terminal block	ZS10-ST-T4	1SNK508311R0000	3	0
2 Terminal block	ZS10-R1	1SNK508011R0000	3	1
3 Terminal block	ZS10-ST-1	1SNK508312R0000	0	3
4 End section	ES10-ST	1SNK508910R0000	1	1
5 Short-circuit bridges	SC-JB8-2	1SNK900652R0000	3	0
6 Test socket	AL4-M3	1SNA206721R0100	0	1
7 Insulated test socket	AJS9	1SNA179726R0200	3	0

1SNK160058S0201

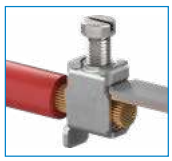

Common point on the terminal block assembly

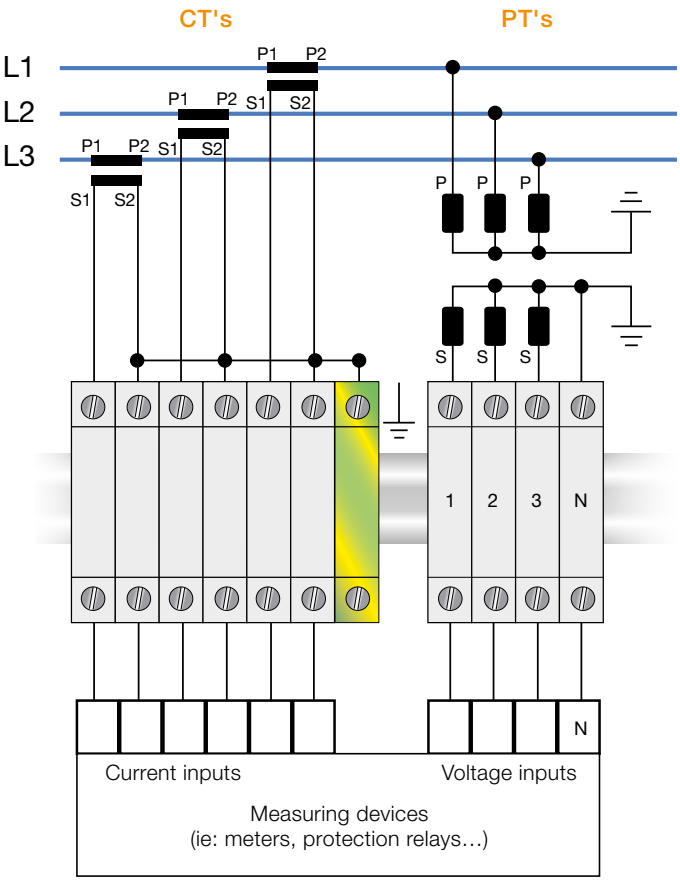

Bill of material optimized

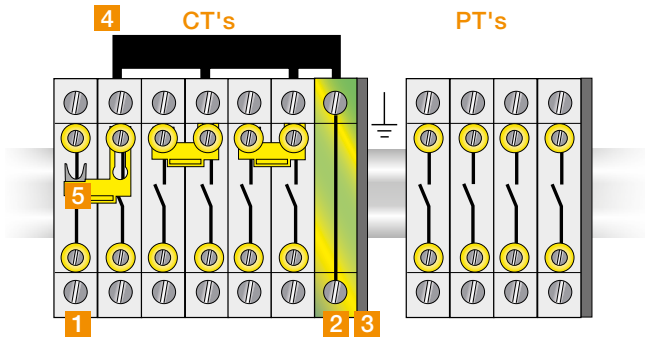

Description	Type	Order code	Qty needed	
			CT's	PT's
1 Terminal block	ZS10-ST-T4	1SNK508311R0000	6	4
2 Terminal block	ZS10-PE-R1	1SNK508151R0000	1	0
3 End section	ES10-ST	1SNK508910R0000	1	1
4 Lateral jumper bars	PC8-R1	1SNA400711R0600	1	0
5 Short-circuit bridges	SC-JB8-2	1SNK900652R0000	3	0

Bill of material with convenient customization (test sockets, feed-through terminals...)

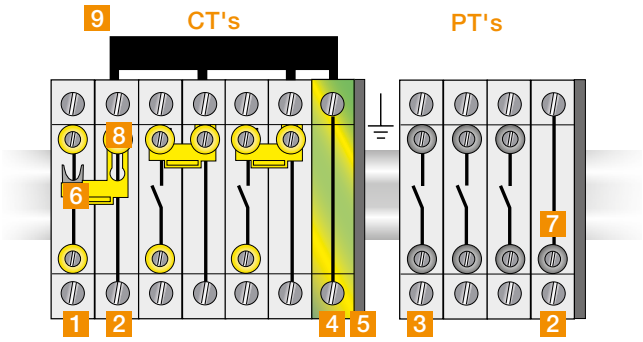

Description	Type	Order code	Qty needed	
			CT's	PT's
1 Terminal block	ZS10-ST-T4	1SNK508311R0000	3	0
2 Terminal block	ZS10-R1	1SNK508011R0000	3	1
3 Terminal block	ZS10-ST-1	1SNK508312R0000	0	3
4 Terminal block	ZS10-PE-R1	1SNK508151R0000	1	0
5 End section	ES10-ST	1SNK508910R0000	1	1
6 Short-circuit bridges	SC-JB8-2	1SNK900652R0000	3	0
7 Test socket	AL4-M3	1SNA206721R0100	0	1
8 Insulated test socket	AJS9	1SNA179726R0200	3	0
9 Lateral jumper bars	PC8-R1	1SNA400711R0600	1	0

1SNK160058S0201

ZS10-ST screw clamp terminal blocks

Test disconnect with sliding link - 8 mm 0.315 in spacing

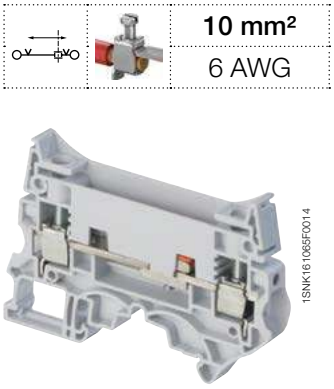

10 mm²
6 AWG

1SNK161065F0014

ZS10-ST

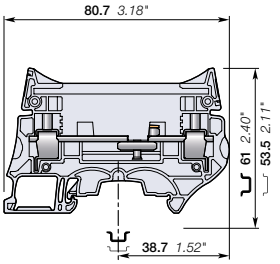

8 mm 0.315 in spacing

Description

- Secure your disconnect operations in control circuits with the robust sliding link operated with a screwdriver,
- Customize ZS10-ST with colored test sockets in order to identify conveniently each phase of the Current Transformer or Potential Transformers secondary circuits,
- Fully compatible with the ZS10-ST-T4 accessories.

Ordering details

Description	Color	Type	Part Number		Pkg qty	Weight (1 pce) g
Disconnect	Grey	ZS10-ST	1SNK508310R0000		25	24.80

Main technical data

Connecting capacity		IEC	UL - CSA
1 conductor per clamp	Rigid - Solid / Stranded	0.5 ... 10 mm²	24 ... 6 AWG
	Flexible	0.5 ... 10 mm²	
	with non insulated ferrule	0.5 ... 10 mm²	24 ... 8 AWG
	with insulated ferrule	0.5 ... 6 mm²	24 ... 10 AWG
	Gauge	A5-B5	
2 conductors per clamp	Rigid - Solid / Stranded	0.5 ... 4 mm²	20 ... 12 AWG
	Flexible	0.5 ... 4 mm²	
	with twin ferrule	0.5 ... 4 mm²	20 ... 12 AWG
Rated current / Rated cross section		50 A / 10 mm²	53 A / 6 AWG
Rated short-time withstand current (1s)		1200 A	
Rated voltage		630 V	300 V
Impulse withstand voltage		8000 V	
Protection		IP20	NEMA 1

Mounting instructions

Rail	TH 35-7.5, TH 35-15
Wire stripping length	13 mm 0.512 in
Screw clamp Tool	Flat screwdriver Ø 3.5 mm Ø 0.138 in
Torque	1.3 Nm ± 0.3 11.5 lb.in ± 2.65
Disconnect device Tool	Flat screwdriver Ø 3.5 mm Ø 0.138
Torque	0.4 Nm ... 0.6 Nm 3.5 lb.in ... 5.3 lb.in

The connecting capacity data for one Rigid - Solid / Stranded - Flexible conductor (when applicable) is a mandatory information required by IEC, UL and CSA standards (Copper conductors). All other data are provided as supplementary information only. For more details, please consult our CB, UL or CSA certificates and technical datasheet available on http://www.TE.com

CE, CB, RoHS, USR CNR, CSA, EAC, BV, DNV

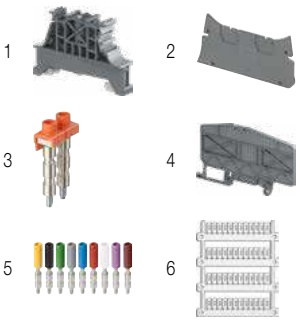

Accessories

	Description			Color	Type	Part Number		Pkg qty	Weight (1 pce) g
1	End stops	10 mm	0.394 in	Dark grey	BAM4	1SNK900001R0000		50	14.00
2	End sections	2 mm	0.079 in	Dark grey	ES10-ST	1SNK508910R0000		20	3.5
3	Jumper bars	2 poles	50 A (IEC)	Orange	JB8-2-R1	1SNK908902R0000		10	7.6
		3 poles	50 A (IEC)		JB8-3-R1	1SNK908903R0000		10	11.6
		4 poles	50 A (IEC)		JB8-4-R1	1SNK908904R0000		10	15.5
		5 poles	50 A (IEC)		JB8-5-R1	1SNK908905R0000		10	19.4
		10 poles	50 A (IEC)		JB8-10-R1	1SNK908910R0000		10	39.00
4	Circuit separators	3 mm	0.118 in	Dark grey	CS-R3	1SNK900107R0000		20	6.40
5	Test sockets	Test sockets DIA 4 mm 0.157 in		Yellow	AJS9	1SNA179726R0200		25	3.60
				Black	AJS9-BK	1SNA206680R1500		25	3.60
				Green	AJS9-GN	1SNA206681R0200		25	3.60
				Grey	AJS9-GR	1SNA206682R0300		25	3.60
				Blue	AJS9-BL	1SNA206683R0400		25	3.60
				Red	AJS9-RD	1SNA206720R1400		25	3.60
				White	AJS9-WH	1SNA206765R0000		25	3.60
				Purple	AJS9-PR	1SNA206772R0000		25	3.60
				Brown	AJS9-BR	1SNA206782R0000		25	3.60
		DIA 4 mm 0.157 in - H=12 mm 0.492 in - M3 screw			AL4-M3	1SNA206721R0100		50	1.10
6	Terminal block markers	Blank marker		White	MG-CPM 13 41791	1SNB041791R0612		1680	0.27
		Blank card			MC812	1SNK160000R0000		22	10.00
					MC812PA	1SNK169999R0000		20	14.00
		Universal wire markers holder		Grey	UMH	1SNK900611R0000		10	0.20

Complete list of accessories is indicated in the terminal block datasheet including end stops.
Some accessories such as jumper bars may modify the terminal block's ratings: Complete information available in the accessories section of the catalog.

ZS10-R1

ZS10-PE-R1

Screw clamp terminal blocks

Description		Color	Type	Part Number		Pkg qty	Weight (1 pce) g
Feed-through	Profile aligned with ZS10-ST...	Grey	ZS10-R1	1SNK508011R0000		25	20.90
Ground	Profile aligned with ZS10-ST...	Green-yellow	ZS10-PE-R1	1SNK508151R0000		25	28.40

1SNK161056S0201

Technical data valid for copper conductors only.

ZS10-ST-1 screw clamp terminal blocks

Test disconnect with sliding link for Potential Transformer circuits - 8 mm 0.315 in spacing

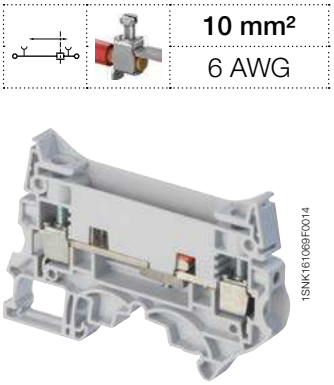

10 mm²
6 AWG

1SNK161069F0014

ZS10-ST-1

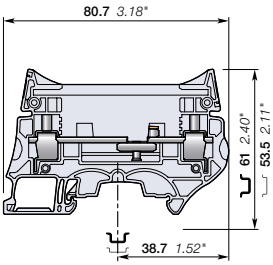

8 mm 0.315 in spacing

Description

Test terminal blocks especially designed for Potential Transformers circuits:

- low profile voltage measurement thanks to the two compact built-in test sockets compatible with DIA 4 mm 0.157 in test plugs,
- Installed with our aligned feed-through and ground terminal blocks, you benefit of a complete and compact solution for your PT circuits.

Ordering details

Description		Color	Type	Part Number		Pkg qty	Weight (1 pce) g
Disconnect	With 2 test sockets DIA 4 mm 0.157 in	Grey	ZS10-ST-1	1SNK508312R0000		25	27.00

Main technical data

Connecting capacity		IEC	UL - CSA
1 conductor per clamp	Rigid - Solid / Stranded	0.5 ... 10 mm²	24 ... 6 AWG
	Flexible	0.5 ... 10 mm²	
	with non insulated ferrule	0.5 ... 10 mm²	24 ... 8 AWG
	with insulated ferrule	0.5 ... 6 mm²	24 ... 10 AWG
	Gauge	A5-B5	
2 conductors per clamp	Rigid - Solid / Stranded	0.5 ... 4 mm²	20 ... 12 AWG
	Flexible	0.5 ... 4 mm²	
	with twin ferrule	0.5 ... 4 mm²	20 ... 12 AWG
Rated current / Rated cross section		50 A / 10 mm²	53 A / 6 AWG
Rated short-time withstand current (1s)		1200 A	
Rated voltage		630 V	300 V
Impulse withstand voltage		8000 V	
Protection		IP10	NEMA 1

Mounting instructions

Rail		TH 35-7.5, TH 35-15
Wire stripping length		13 mm 0.512 in
Screw clamp Tool		Flat screwdriver Ø 3.5 mm Ø 0.138 in
Torque		1.3 Nm ± 0.3 11.5 lb.in ± 2.65
Disconnect device Tool		Flat screwdriver Ø 3.5 mm Ø 0.138
Torque		0.4 Nm ... 0.6 Nm 3.5 lb.in ... 5.3 lb.in

The connecting capacity data for one Rigid - Solid / Stranded - Flexible conductor (when applicable) is a mandatory information required by IEC, UL and CSA standards (Copper conductors). All other data are provided as supplementary information only. For more details, please consult our CB, UL or CSA certificates and technical datasheet available on http://www.TE.com

CE | CB | RoHS | USR CNR | CSA | EAC | BV | DNV

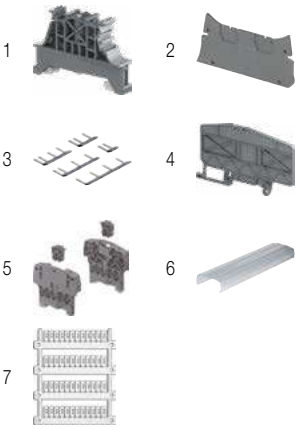

Accessories

	Description			Color	Type	Part Number		Pkg qty	Weight (1 pce) g
1	**End stops**	10 mm	0.394 in	Dark grey	BAM4	1SNK900001R0000		50	14.00
2	**End sections**	2 mm	0.079 in	Dark grey	ES10-ST	1SNK508910R0000		20	3.5
3	**Lateral jumper bars**	10 poles		Black	PC8-10	1SNA163313R2400		10	14.00
		4/6 poles			PC8-R1	1SNA400711R0600		10	6.60
		4/8 poles			PC8-R2	1SNA400712R0700		10	7.80
		4/10 poles			PC8-R3	1SNA400713R0000		10	9.00
		3/4 poles			PC8-R4	1SNA400724R0300		10	4.50
		4/7 poles			PC8-R5	1SNA400842R0000		10	6.60
		2/3 poles			PC8-R6	1SNA400843R0000		10	6.60
		4/6 poles			PC8-R7	1SNA400849R0000		10	6.60
		4/8 poles			PC8-R8	1SNA400850R0000		10	7.80
4	**Circuit separators**	3 mm	0.118 in	Dark grey	CS-R3	1SNK900107R0000		20	6.40
5	**Protecting cover kits**			Dark grey	KCO	1SNK900624R0000		1	47.80
6	**Protecting covers**	1 m 39.4 in length		Transparent	CO	1SNK900604R0000		1	300.00
7	**Terminal block markers**	Blank marker		White	MG-CPM 13 41791	1SNB041791R0612		1680	0.27
		Blank card			MC812	1SNK160000R0000		22	10.00
					MC812PA	1SNK169999R0000		20	14.00
		Universal wire markers holder		Grey	UMH	1SNK900611R0000		10	0.20

Complete list of accessories is indicated in the terminal block datasheet including end stops.
Some accessories such as jumper bars may modify the terminal block's ratings: Complete information available in the accessories section of the catalog.

ZS10-R1

ZS10-PE-R1

Screw clamp terminal blocks

Description		Color	Type	Part Number		Pkg qty	Weight (1 pce) g
Feed-through	Profile aligned with ZS10-ST...	Grey	ZS10-R1	1SNK508011R0000		25	20.90
Ground	Profile aligned with ZS10-ST...	Green-yellow	ZS10-PE-R1	1SNK508151R0000		25	28.40

1SNK161062S0201

Technical data valid for copper conductors only.

ZS10-ST-T4 screw clamp terminal blocks

Test disconnect with sliding link for Current Transformer circuits - 8 mm 0.315 in spacing

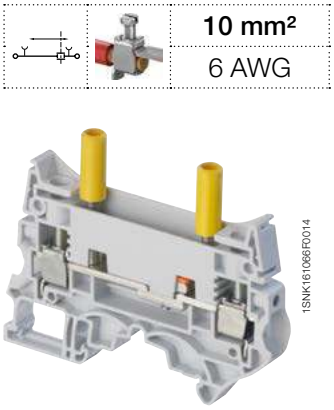

10 mm²	
6 AWG	

ZS10-ST-T4

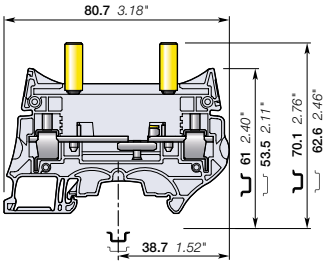

8 mm 0.315 in spacing

Description

Test terminal blocks especially designed for Current Transformers circuits:

- easy and safe current measurement thanks to the two insulated built-in test sockets compatible with IP20 DIA 4 mm 0.157 in test plugs (per IEC60101-031),
- convenient short-circuit operations with the SC-JB insulated sliding bridges.

Ordering details

Description		Color	Type	Part Number		Pkg qty	Weight (1 pce) g
Disconnect	With two yellow test sockets DIA 4 mm 0.157 in	Grey	ZS10-ST-T4	1SNK508311R0000		25	31.90

Main technical data

Connecting capacity		IEC	UL - CSA
1 conductor per clamp	Rigid - Solid / Stranded	0.5 ... 10 mm²	24 ... 6 AWG
	Flexible	0.5 ... 10 mm²	
	with non insulated ferrule	0.5 ... 10 mm²	24 ... 8 AWG
	with insulated ferrule	0.5 ... 6 mm²	24 ... 10 AWG
	Gauge	A5-B5	
2 conductors per clamp	Rigid - Solid / Stranded	0.5 ... 4 mm²	20 ... 12 AWG
	Flexible	0.5 ... 4 mm²	
	with twin ferrule	0.5 ... 4 mm²	20 ... 12 AWG
Rated current / Rated cross section		50 A / 10 mm²	53 A / 6 AWG
Rated short-time withstand current (1s)		1200 A	
Rated voltage		630 V	300 V
Impulse withstand voltage		8000 V	
Protection		IP20	NEMA 1

Mounting instructions

Rail	TH 35-7.5, TH 35-15
Wire stripping length	13 mm 0.512 in
Screw clamp Tool	Flat screwdriver Ø 3.5 mm Ø 0.138 in
Torque	1.3 Nm ± 0.3 11.5 lb.in ± 2.65
Disconnect device Tool	Flat screwdriver Ø 3.5 mm Ø 0.138
Torque	0.4 Nm ... 0.6 Nm 3.5 lb.in ... 5.3 lb.in
Test socket Tool	Flat screwdriver Ø 3.5 mm Ø 0.138
Torque	0.4 Nm ... 0.6 Nm 3.5 lb.in ... 5.3 lb.in

The connecting capacity data for one Rigid - Solid / Stranded - Flexible conductor (when applicable) is a mandatory information required by IEC, UL and CSA standards (Copper conductors). All other data are provided as supplementary information only. For more details, please consult our CB, UL or CSA certificates and technical datasheet available on http://www.TE.com

CE CB RoHS USR CNR CSA EAC BV DNV

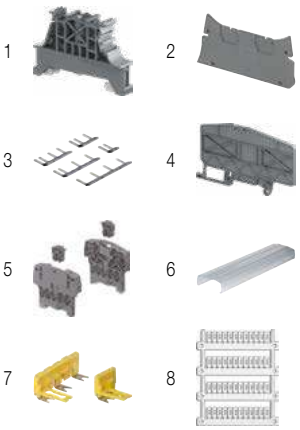

Accessories

	Description			Color	Type	Part Number		Pkg qty	Weight (1 pce) g
1	**End stops**	10 mm	0.394 in	Dark grey	BAM4	1SNK900001R0000		50	14.00
2	**End sections**	2 mm	0.079 in	Dark grey	ES10-ST	1SNK508910R0000		20	3.5
3	**Lateral jumper bars**	10 poles		Black	PC8-10	1SNA163313R2400		10	14.00
		4/6 poles			PC8-R1	1SNA400711R0600		10	6.60
		4/8 poles			PC8-R2	1SNA400712R0700		10	7.80
		4/10 poles			PC8-R3	1SNA400713R0000		10	9.00
		3/4 poles			PC8-R4	1SNA400724R0300		10	4.50
		4/7 poles			PC8-R5	1SNA400842R0000		10	6.60
		2/3 poles			PC8-R6	1SNA400843R0000		10	6.60
		4/6 poles			PC8-R7	1SNA400849R0000		10	6.60
		4/8 poles			PC8-R8	1SNA400850R0000		10	7.80
4	**Circuit separators**	3 mm	0.118 in	Dark grey	CS-R3	1SNK900107R0000		20	6.40
5	**Protecting cover kits**			Dark grey	KCO	1SNK900624R0000		1	47.80
6	**Protecting covers**	1 m 39.4 in length		Transparent	CO	1SNK900604R0000		1	300.00
7	**Short circuit bridges**	2 poles		Yellow	SC-JB8-2	1SNK900652R0000		25	2.00
		3 poles			SC-JB8-3	1SNK900653R0000		25	3.4
		4 poles			SC-JB8-4	1SNK900654R0000		25	4.7
8	**Terminal block markers**	Blank marker		White	MG-CPM 13 41791	1SNB041791R0612		1680	0.27
		Blank card			MC812	1SNK160000R0000		22	10.00
					MC812PA	1SNK169999R0000		20	14.00
		Universal wire markers holder		Grey	UMH	1SNK900611R0000		10	0.20

Complete list of accessories is indicated in the terminal block datasheet including end stops.
Some accessories such as jumper bars may modify the terminal block's ratings: Complete information available in the accessories section of the catalog.

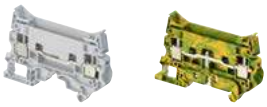

ZS10-R1 ZS10-PE-R1

Screw clamp terminal blocks

Description		Color	Type	Part Number		Pkg qty	Weight (1 pce) g
Feed-through	Profile aligned with ZS10-ST...	Grey	ZS10-R1	1SNK508011R0000		25	20.90
Ground	Profile aligned with ZS10-ST...	Green-yellow	ZS10-PE-R1	1SNK508151R0000		25	28.40

1SNK161057S0201

Technical data valid for copper conductors only.

ZS10-R1 screw clamp terminal blocks
Feed-through - 8 mm 0.315 in spacing

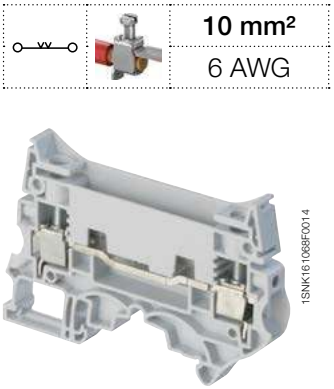

ZS10-R1

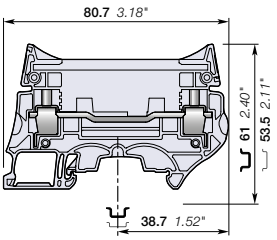

8 mm 0.315 in spacing

		10 mm²
		6 AWG

Description

- With the same profile as the ZS10-ST..., the feed-through ZS10-R1 allows you to fully implement the electrical drawing of your CT or PT circuits,
- Fully compatible with the ZS10-ST... accessories.

Ordering details

Description		Color	Type	Part Number		Pkg qty	Weight (1 pce) g
Feed-through	Profile aligned with ZS10-ST...	Grey	ZS10-R1	1SNK508011R0000		25	20.90

Main technical data

Connecting capacity		IEC	UL - CSA
1 conductor per clamp	Rigid - Solid / Stranded	0.5 ... 10 mm²	24 ... 6 AWG
	Flexible	0.5 ... 10 mm²	
	with non insulated ferrule	0.5 ... 10 mm²	24 ... 8 AWG
	with insulated ferrule	0.5 ... 6 mm²	24 ... 10 AWG
	Gauge	A5-B5	
2 conductors per clamp	Rigid - Solid / Stranded	0.5 ... 4 mm²	20 ... 12 AWG
	Flexible	0.5 ... 4 mm²	
	with twin ferrule	0.5 ... 4 mm²	20 ... 12 AWG
Rated current / Rated cross section		57 A / 10 mm²	62 A / 6 AWG
Rated short-time withstand current (1s)		1200 A	
Short Circuit Current Rating (with specific conditions)			
Rated voltage		630 V	300 V
Impulse withstand voltage		8000 V	
Protection		IP20	NEMA 1

Mounting instructions

Rail	TH 35-7.5, TH 35-15
Wire stripping length	13 mm 0.512 in
Tool	Flat screwdriver Ø 3.5 mm Ø 0.138 in
Torque	1.3 Nm ± 0.3 11.5 lb.in ± 2.65

The connecting capacity data for one Rigid - Solid / Stranded - Flexible conductor (when applicable) is a mandatory information required by IEC, UL and CSA standards (Copper conductors). All other data are provided as supplementary information only. For more details, please consult our CB, UL or CSA certificates and technical datasheet available on http://www.TE.com

CE CB RoHS USR CNR CSA EAC BV DNV

Accessories

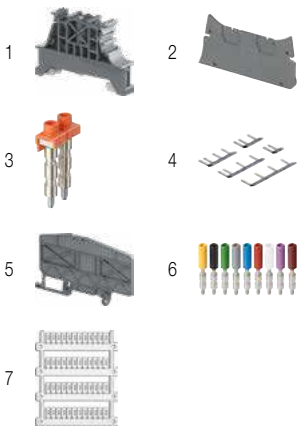

	Description			Color	Type	Part Number		Pkg qty	Weight (1 pce) g
1	**End stops**	10 mm	0.394 in	Dark grey	BAM4	1SNK900001R0000		50	14.00
2	**End sections**	2 mm	0.079 in	Dark grey	ES10-ST	1SNK508910R0000		20	3.5
3	**Jumper bars**	2 poles	50 A (IEC)	Orange	JB8-2-R1	1SNK908902R0000		10	7.6
		3 poles	50 A (IEC)		JB8-3-R1	1SNK908903R0000		10	11.6
		4 poles	50 A (IEC)		JB8-4-R1	1SNK908904R0000		10	15.5
		5 poles	50 A (IEC)		JB8-5-R1	1SNK908905R0000		10	19.4
		10 poles	50 A (IEC)		JB8-10-R1	1SNK908910R0000		10	39.00
4	**Lateral jumper bars**	4/7 poles		Black	PC8-R5	1SNA400842R0000		10	6.60
		2/3 poles			PC8-R6	1SNA400843R0000		10	6.60
		4/6 poles			PC8-R7	1SNA400849R0000		10	6.60
		4/8 poles			PC8-R8	1SNA400850R0000		10	7.80
5	**Circuit separators**	3 mm	0.118 in	Dark grey	CS-R3	1SNK900107R0000		20	6.40
6	**Test sockets**	Test sockets DIA 4 mm 0.157 in		Yellow	AJS9	1SNA179726R0200		25	3.60
7	**Terminal block markers**	Blank marker		White	MG-CPM 13 41791	1SNB041791R0612		1680	0.27
		Blank card			MC812	1SNK160000R0000		22	10.00
					MC812PA	1SNK169999R0000		20	14.00
		Universal wire markers holder		Grey	UMH	1SNK900611R0000		10	0.20

Complete list of accessories is indicated in the terminal block datasheet including end stops.
Some accessories such as jumper bars may modify the terminal block's ratings: Complete information available in the accessories section of the catalog.

1SNK161059S0201

Technical data valid for copper conductors only.

ZS10-PE-R1 screw clamp terminal blocks

Ground - 8 mm 0.315 in spacing

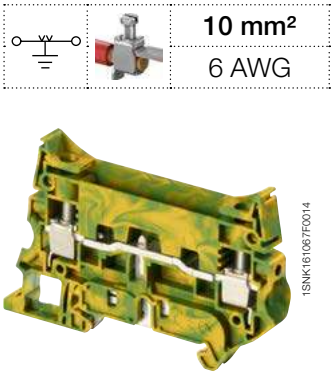

ZS10-PE-R1

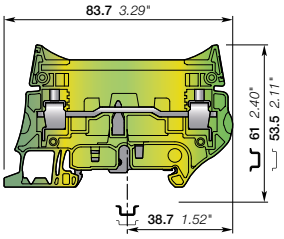

8 mm 0.315 in spacing

10 mm²	
6 AWG	

Description

- With the same profile as the ZS10-ST..., the ground ZS10-PE-R1 allows you to fully implement the electrical drawing of your CT or PT circuits,
- Fully compatible with the ZS10-ST... accessories,
- Short-circuit performances above the requirements of IEC 60947-7-2 terminal block standard,
- Secured snap on or remove from the rail.

Ordering details

Description		Color	Type	Part Number		Pkg qty	Weight (1 pce) g
Ground	Profile aligned with ZS10-ST...	Green-yellow	ZS10-PE-R1	1SNK508151R0000		25	28.40

Main technical data

Connecting capacity		IEC	UL - CSA
1 conductor per clamp	Rigid - Solid / Stranded	0.5 ... 10 mm²	24 ... 6 AWG
	Flexible	0.5 ... 10 mm²	
	with non insulated ferrule	0.5 ... 10 mm²	24 ... 8 AWG
	with insulated ferrule	0.5 ... 6 mm²	24 ... 10 AWG
	Gauge	A5-B5	
Rated cross section		10 mm²	6 AWG
Rated short-time withstand current (1s)		1200 A	1596 A
Protection		IP20	NEMA 1

Mounting instructions

Rail	TH 35-7.5, TH 35-15
Wire stripping length	13 mm 0.512 in
Tool	Flat screwdriver Ø 3.5 mm Ø 0.138 in
Torque	1.3 Nm ± 0.3 11.5 lb.in ± 2.65

The connecting capacity data for one Rigid - Solid / Stranded - Flexible conductor (when applicable) is a mandatory information required by IEC, UL and CSA standards (Copper conductors). All other data are provided as supplementary information only. For more details, please consult our CB, UL or CSA certificates and technical datasheet available on http://www.TE.com

CE, CB, RoHS, USR CNR, CSA, EAC, BV, DNV

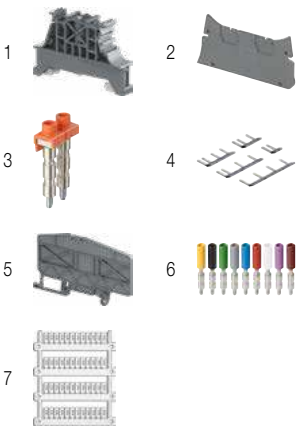

Accessories

	Description			Color	Type	Part Number		Pkg qty	Weight (1 pce) g
1	End stops	10 mm	0.394 in	Dark grey	BAM4	1SNK900001R0000		50	14.00
2	End sections	2 mm	0.079 in	Dark grey	ES10-ST	1SNK508910R0000		20	3.5
3	Jumper bars	2 poles	50 A (IEC)	Orange	JB8-2-R1	1SNK908902R0000		10	7.6
		3 poles	50 A (IEC)		JB8-3-R1	1SNK908903R0000		10	11.6
		4 poles	50 A (IEC)		JB8-4-R1	1SNK908904R0000		10	15.5
		5 poles	50 A (IEC)		JB8-5-R1	1SNK908905R0000		10	19.4
		10 poles	50 A (IEC)		JB8-10-R1	1SNK908910R0000		10	39.00
4	Lateral jumper bars	4/7 poles		Black	PC8-R5	1SNA400842R0000		10	6.60
		2/3 poles			PC8-R6	1SNA400843R0000		10	6.60
		4/6 poles			PC8-R7	1SNA400849R0000		10	6.60
		4/8 poles			PC8-R8	1SNA400850R0000		10	7.80
5	Circuit separators	3 mm	0.118 in	Dark grey	CS-R3	1SNK900107R0000		20	6.40
6	Test sockets	Test sockets DIA 4 mm 0.157 in		Yellow	AJS9	1SNA179726R0200		25	3.60
7	Terminal block markers	Blank marker		White	MG-CPM 13 41791	1SNB041791R0612		1680	0.27
		Blank card			MC812	1SNK160000R0000		22	10.00
					MC812PA	1SNK169999R0000		20	14.00
		Universal wire markers holder		Grey	UMH	1SNK900611R0000		10	0.20

Complete list of accessories is indicated in the terminal block datasheet including end stops.
Some accessories such as jumper bars may modify the terminal block's ratings: Complete information available in the accessories section of the catalog.

1SNK161058S0201

Technical data valid for copper conductors only.

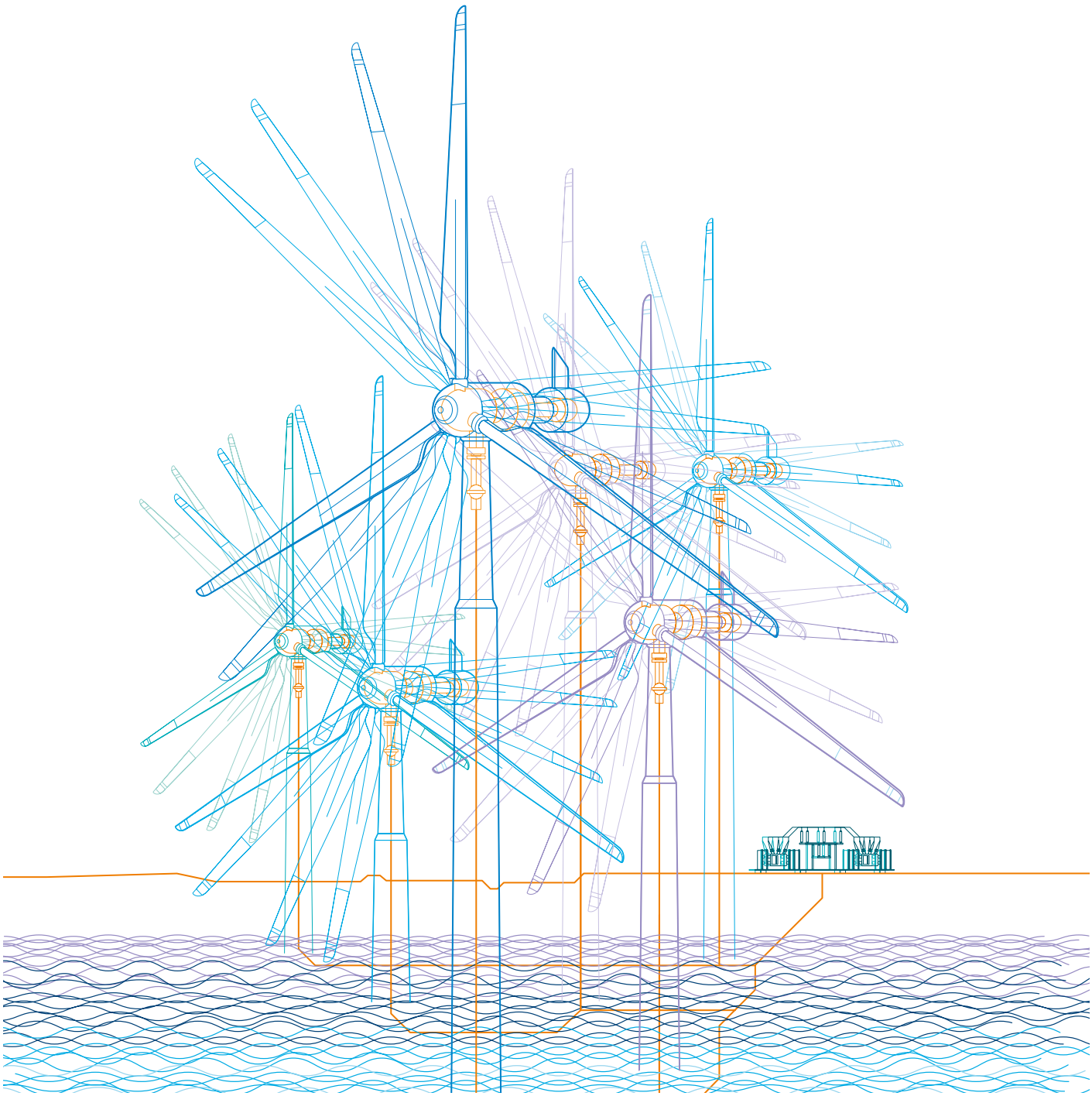

3

PB-125

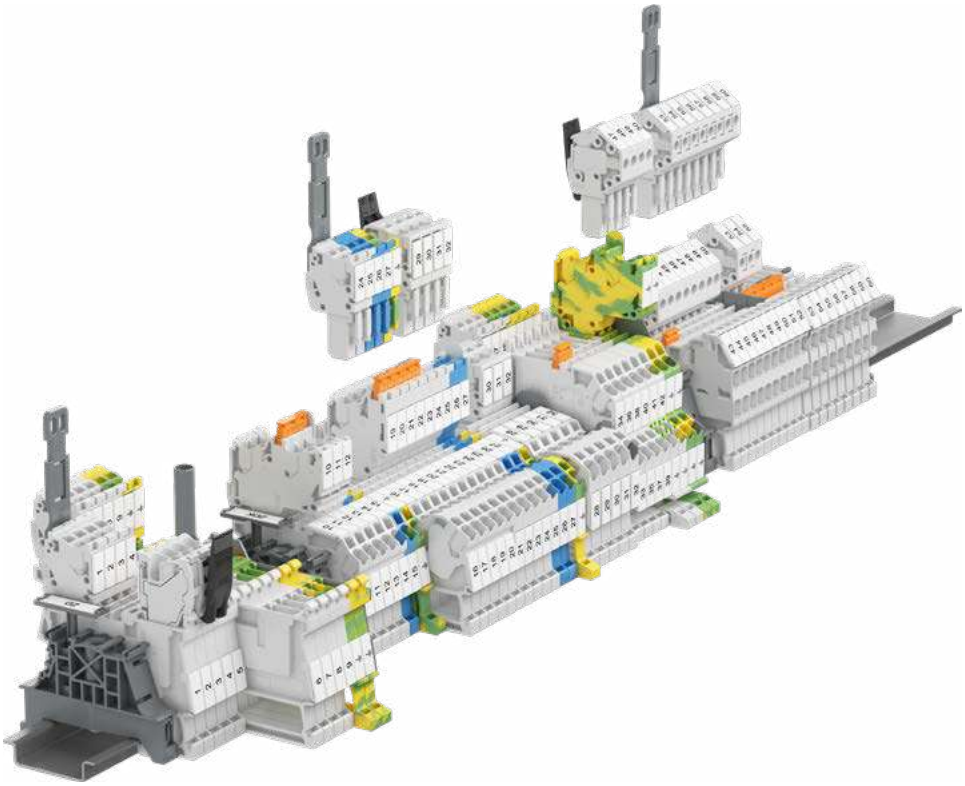

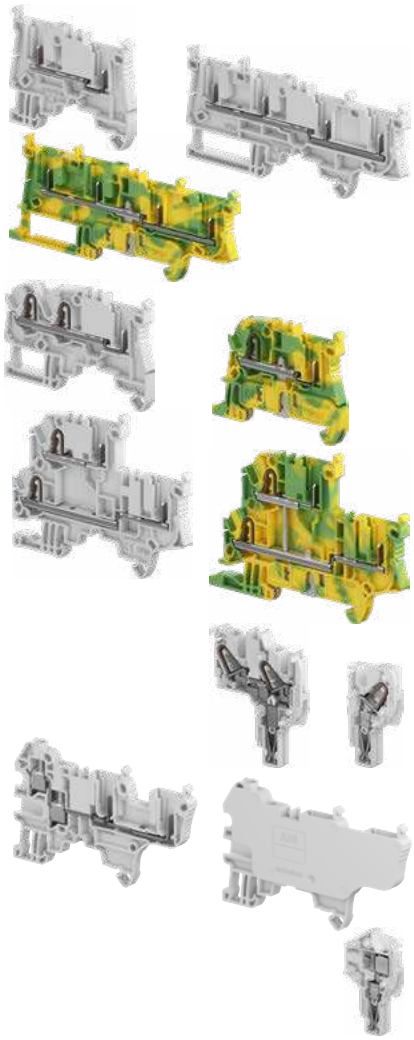

Technologies presentation			162
Overview			168

PI-Spring Pluggable

Pluggable Pluggable			
2.5 mm² / 12 AWG	Feed-through	**ZD2.5-11**	172
		ZD2.5-22	173
	Ground	**ZD2.5-22-PE**	174
PI-Spring Pluggable			
2.5 mm² / 12 AWG	Feed-through	**ZDK2.5-11**	175
		ZDK2.5-21	176
		ZDK2.5-22	177
4 mm² / 10 AWG	Feed-through	**ZDK4-22**	178
2.5 mm² / 12 AWG	Ground	**ZDK2.5-11-PE**	179
		ZDK2.5-22-PE	180
	Double deck	**ZDK2.5-D2**	181
		ZDK2.5-D1	182
		ZDK2.5-D2-PE	183
		ZDK2.5-D1-PE	184
PI-Spring female plugs		**CDK2.5**	185
		CDK2.5-J	186
		CDK2.5-2P-J	187
		CDK4	188

Screw clamp Pluggable

4 mm² / 10 AWG	Feed-through	**ZDS4-22**	190
		ZDS4-22-R1	192
Screw clamp female plugs		**CDS4**	191
		CDS4-R1	193

4

Summary_4

The SNK series pluggable terminal blocks combine the benefits of our smart connections with the flexibility of the pluggable function.

PI-Spring Pluggable

PI-Spring Pluggable

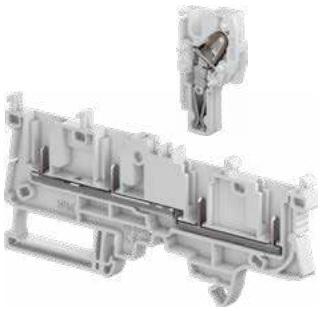

Pluggable Pluggable

Screw clamp Pluggable

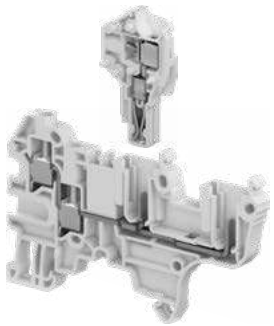

Speed up your projects

Modularity brings assembly flexibility

Pluggable technology brings modularity into the electrical installation allowing the combination of sub-assemblies and prewired harnesses that facilitate and considerably accelerate assembly test and factory commissioning.

Better project identification

– Circuit identification is improved thanks to the 20% larger marking area
– Pre-mark by hand or with label on our flat marking surface and start immediately the wiring, before the final markers mounting
– Spare markers re-printing in case of modifications.

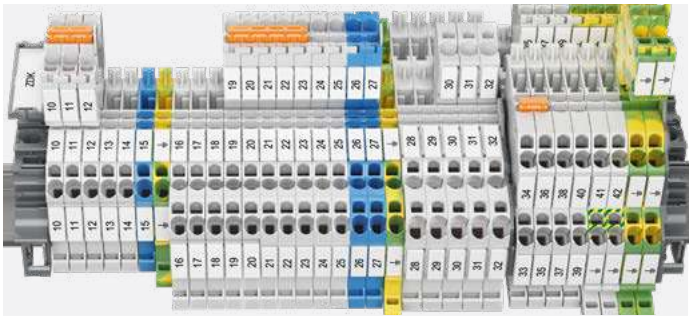

Clear circuit identification

1SNK164014S0201 - Rev. A

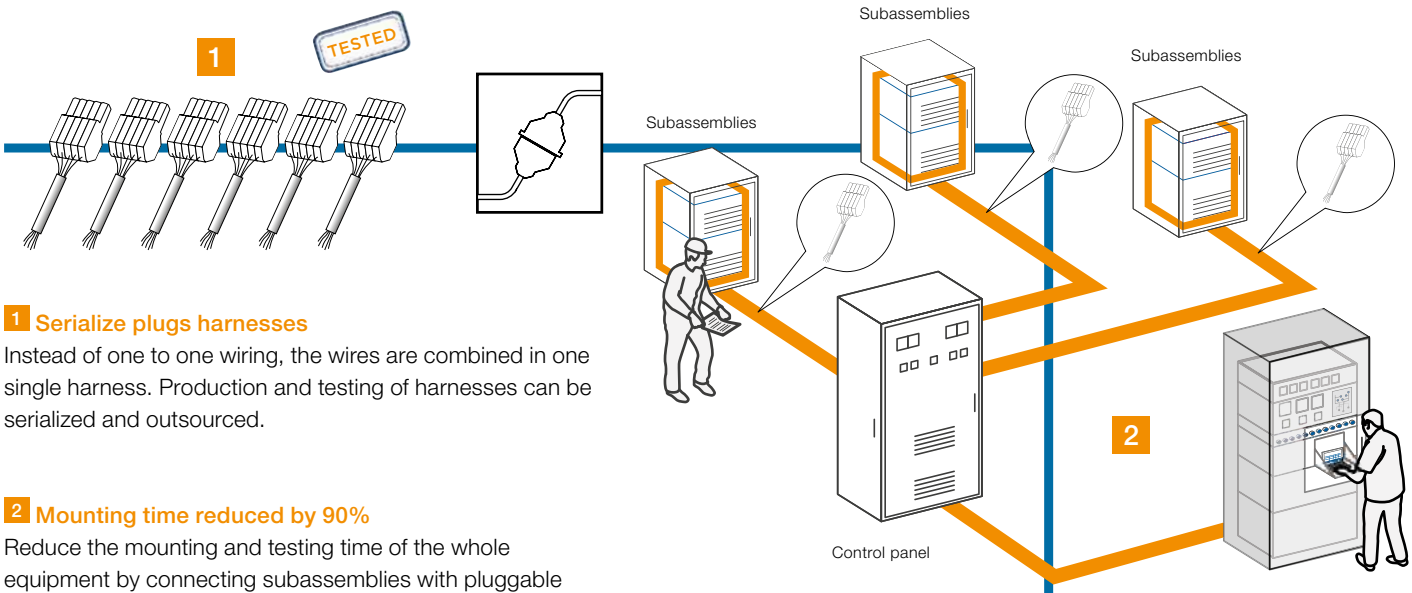

1 Serialize plugs harnesses

Instead of one to one wiring, the wires are combined in one single harness. Production and testing of harnesses can be serialized and outsourced.

2 Mounting time reduced by 90%

Reduce the mounting and testing time of the whole equipment by connecting subassemblies with pluggable terminal blocks and harnesses. Ease the factory commissioning.

3 Disconnect for transportation

Easily disconnect the harnesses if needed for convenient transportation of big equipment.

4 Quickly secure on-site reconnection

Secure oan-site installation: final reconnection is done in few quick steps and fully secured thanks to error-free coding system. Facilitate the final commissioning.

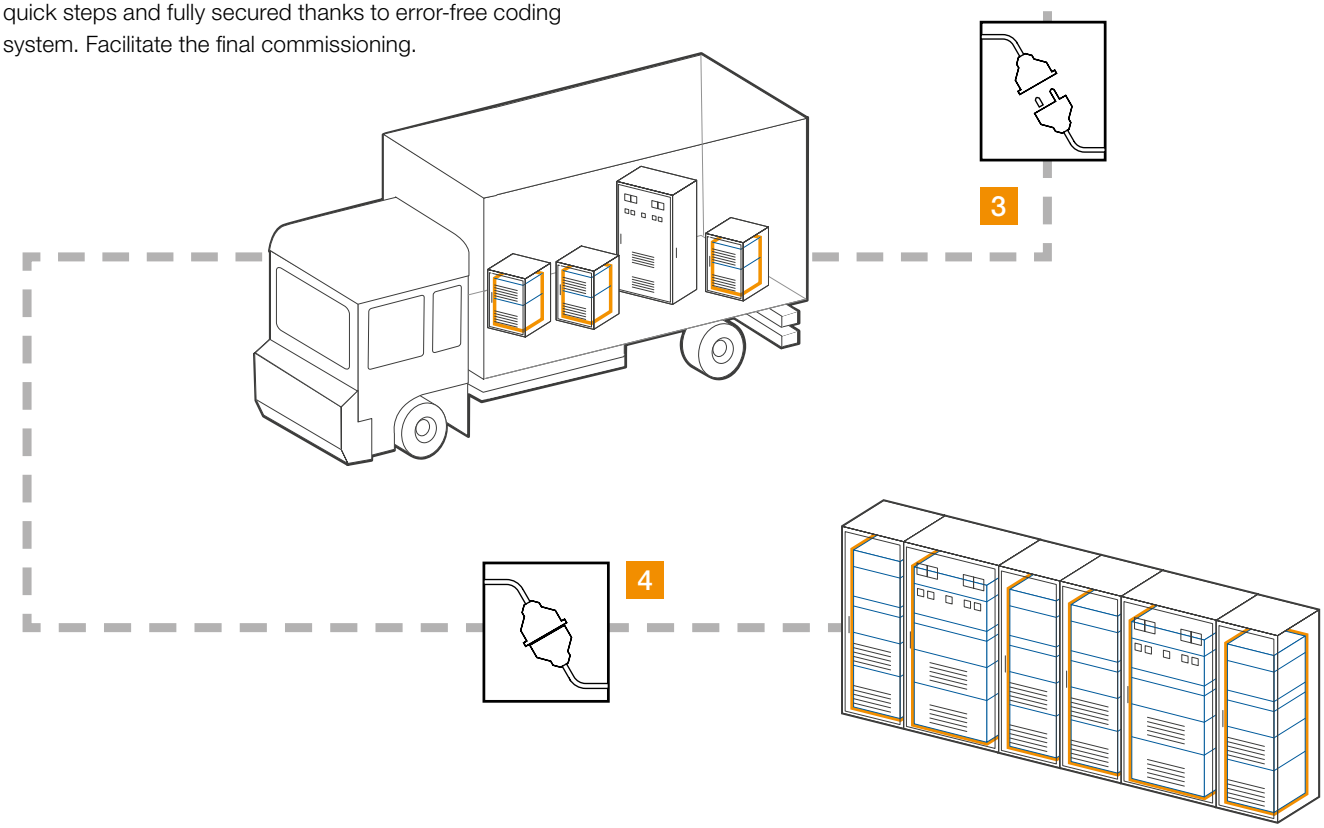

1SNK164014S0201 - Rev. A

Easy to install

Smart design facilitating assembly process

Mounting, wiring, testing… made easy.

Create your own assemblies without tooling:

– Easily snap together multiple plugs

– Eliminate stock of pre-configured plugs.

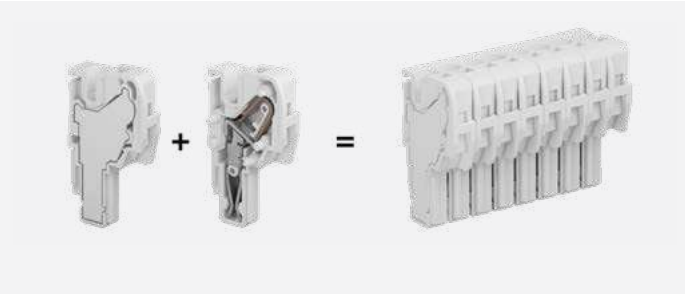

Only two plug variants are required to compose harnesses up to 15 poles

Some plugs feature a jumper channel and/or 2 connections that ease the signal distribution or wiring daisy chaining of subassemblies.

Easy signal distribution on plugs

Safety and protection

Eliminate connection errors with coding pegs:

– Simply insert the pegs to create a coding sequence.

Secure your wiring against accidental tearing:

– Automatic locking function

– Lock safely 2 to 8 plugs with only one locking device

– Cable clamp secures the wires onto the plug when pulling the plug assembly.

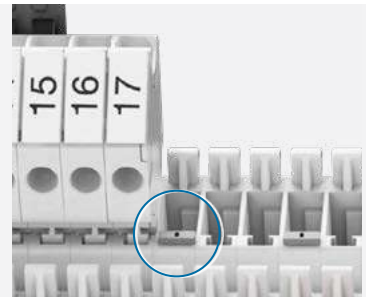

Convenient coding pegs

Cable clamp & locking device

Faster accessories mounting

Save up to 70% mounting time thanks to:

– Screwless jumpers, component plugs, test devices, end stops and snap-in ground terminal blocks.

Closed jumper location allows great stiffness of the terminal block, avoid deflection while tightening and optimal jumper guiding.

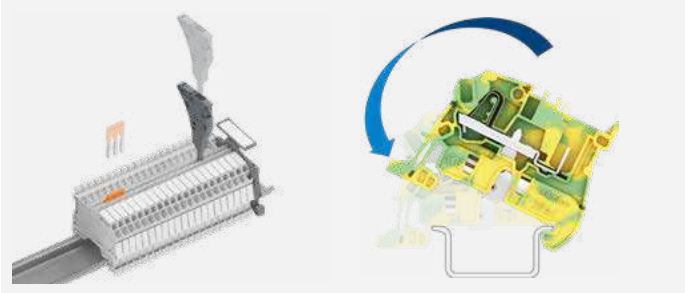

Screwless accessories **Snap-in ground terminal blocks**

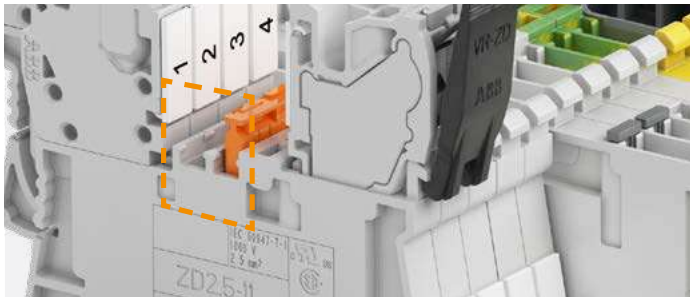

Closed jumper location for stiffness

Smart accessories

Flexible test solutions from individual insulated test adapter to test connectors for complete assemblies testing.

– Direct plug-in into jumpers channels

– 5, 6, 8 mm spacing, mixing various spacing is possible

– 1000 V rating.

Smart plug-in jumpers

Pre-cut poles removable by hand: clean cut.

Insulated up to 1000 V (avoid use of separators).

Predefined shapes in molding to easily identify connected poles with a pen.

Plug-in individual test adapter **Plug-in test connector**

Pre-cut poles easy removable by hand **Predefined shape to identify connected poles**

1SNK164014S0201 - Rev. A

Optimized logistics

Reduce your accessories inventory by up to 50%

SNK PI-Spring, screw and pluggable ranges share the same accessories.

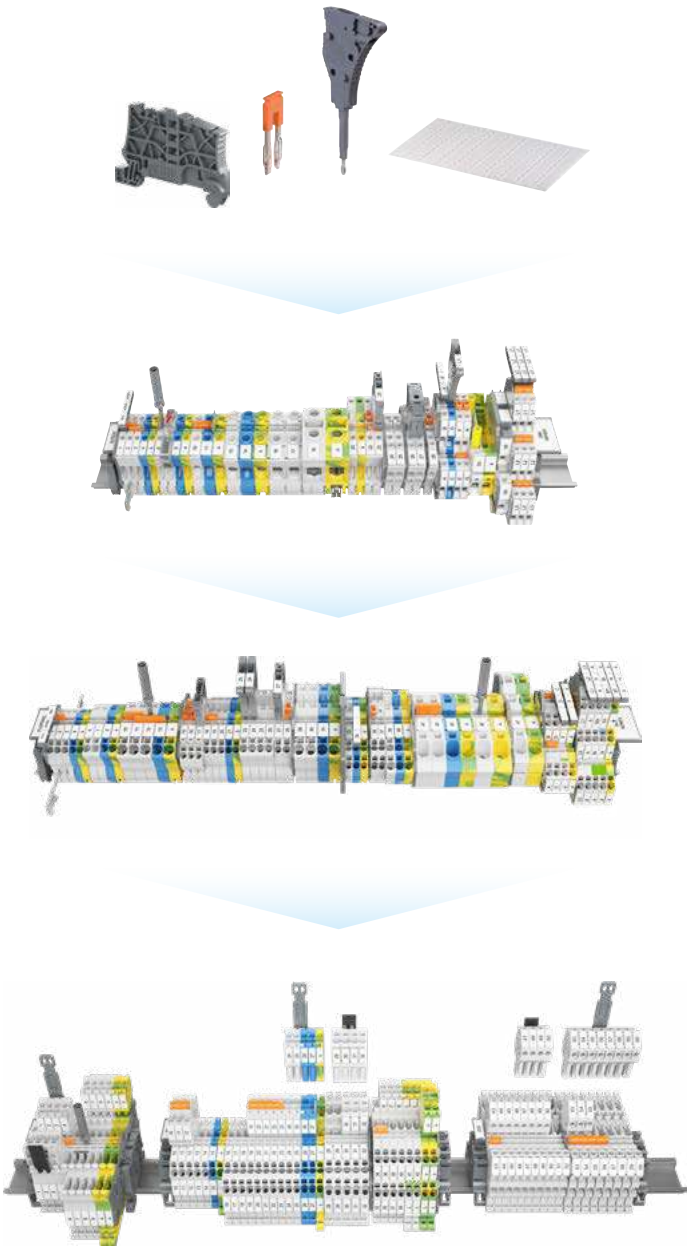

Shared accessories for SNK PI-Spring, screw and pluggable ranges

Facilitate maintenance operations

Terminal blocks can be individually removed from a terminal assembly equipped with markers: TE Connectivity markers become independent after strip mounting. The markers remain on terminal in any situation.
Markers are interchangable: the smaller marker can fit any bigger block.

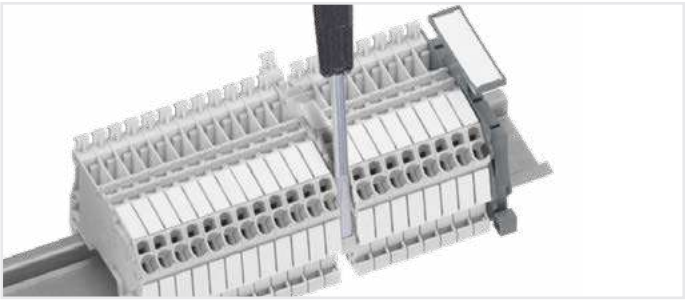

Maintenance operations facilitated

Reliable in harsh conditions

Qualified for worldwide markets, applications and for severe environments: vibration, shock, corrosion…

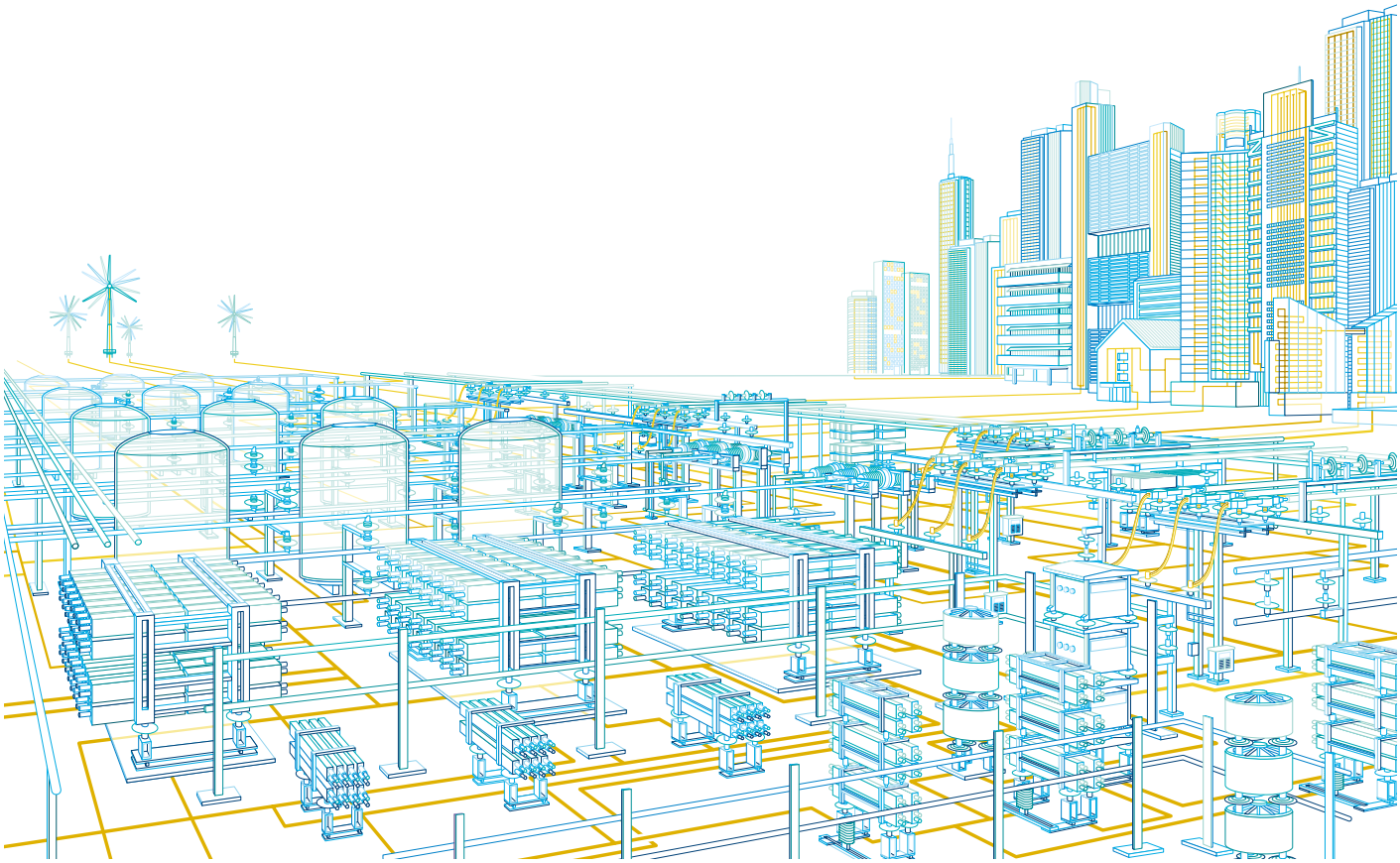

1SNK164014S0201 - Rev. A

PI-Spring Pluggable

Pluggable Pluggable

2 Connections
Single deck
Feed-through

4 Connections
Single deck
Feed-through
Ground

PI-Spring Pluggable

2 Connections
Single deck
Feed-through
Ground

3 Connections
Single deck
Feed-through

4 Connections
Single deck
Feed-through
Ground

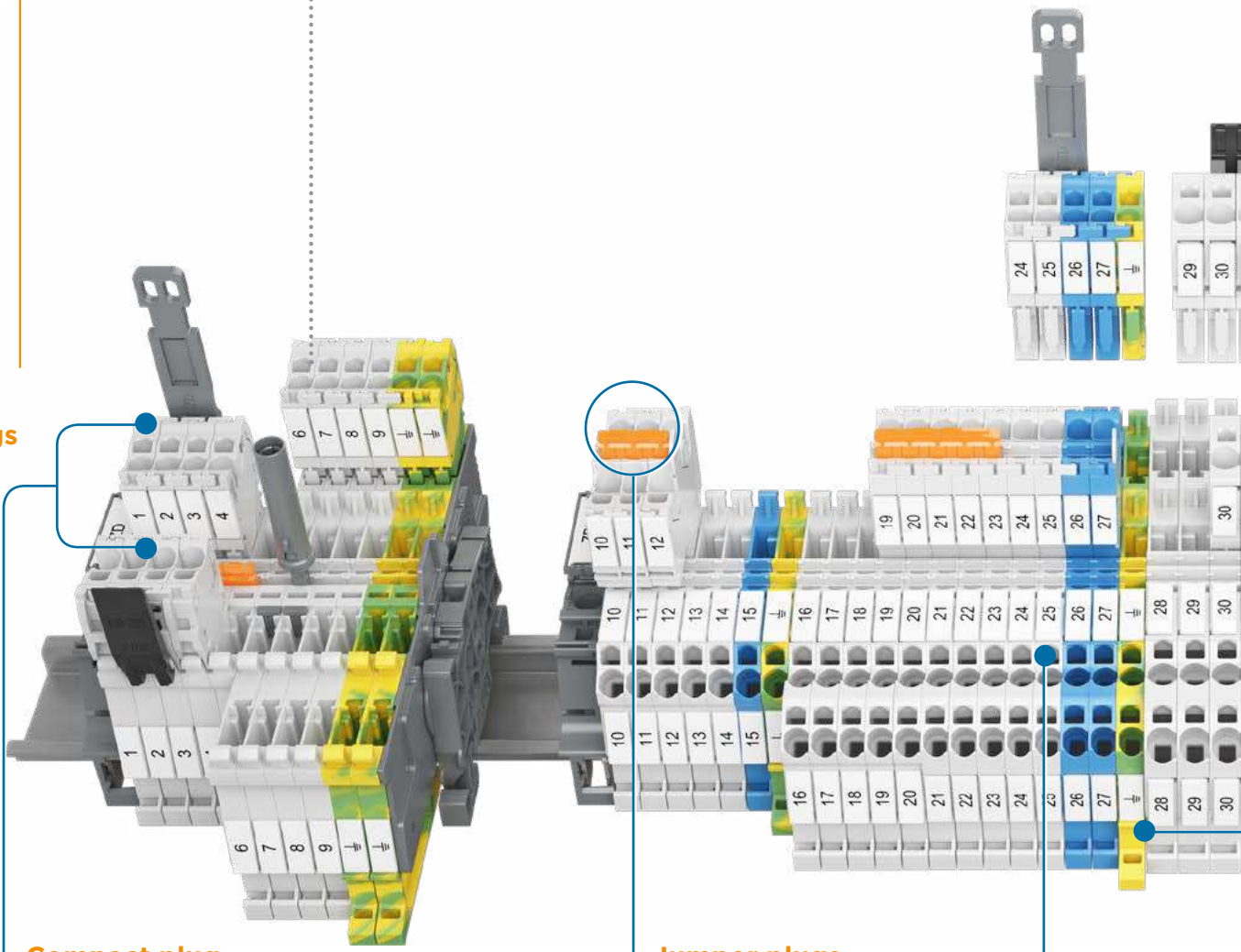

Plugs

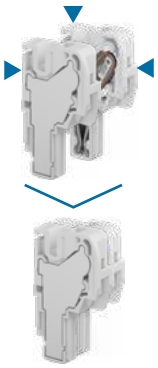

Compact plug
Save up to 15% in height

Reduced plug variants
Only two plugs variants to create assemblies

Jumper plugs
Plugs with 1 or 2 connection & jumper to ease potential distribution

Voltage test
Screwdriver entry point accepts category II probes

Screw clamp Pluggable

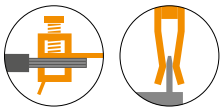

2x2
Connections
Double deck
Feed-through
Ground

4
Connections
Single deck
Feed-through

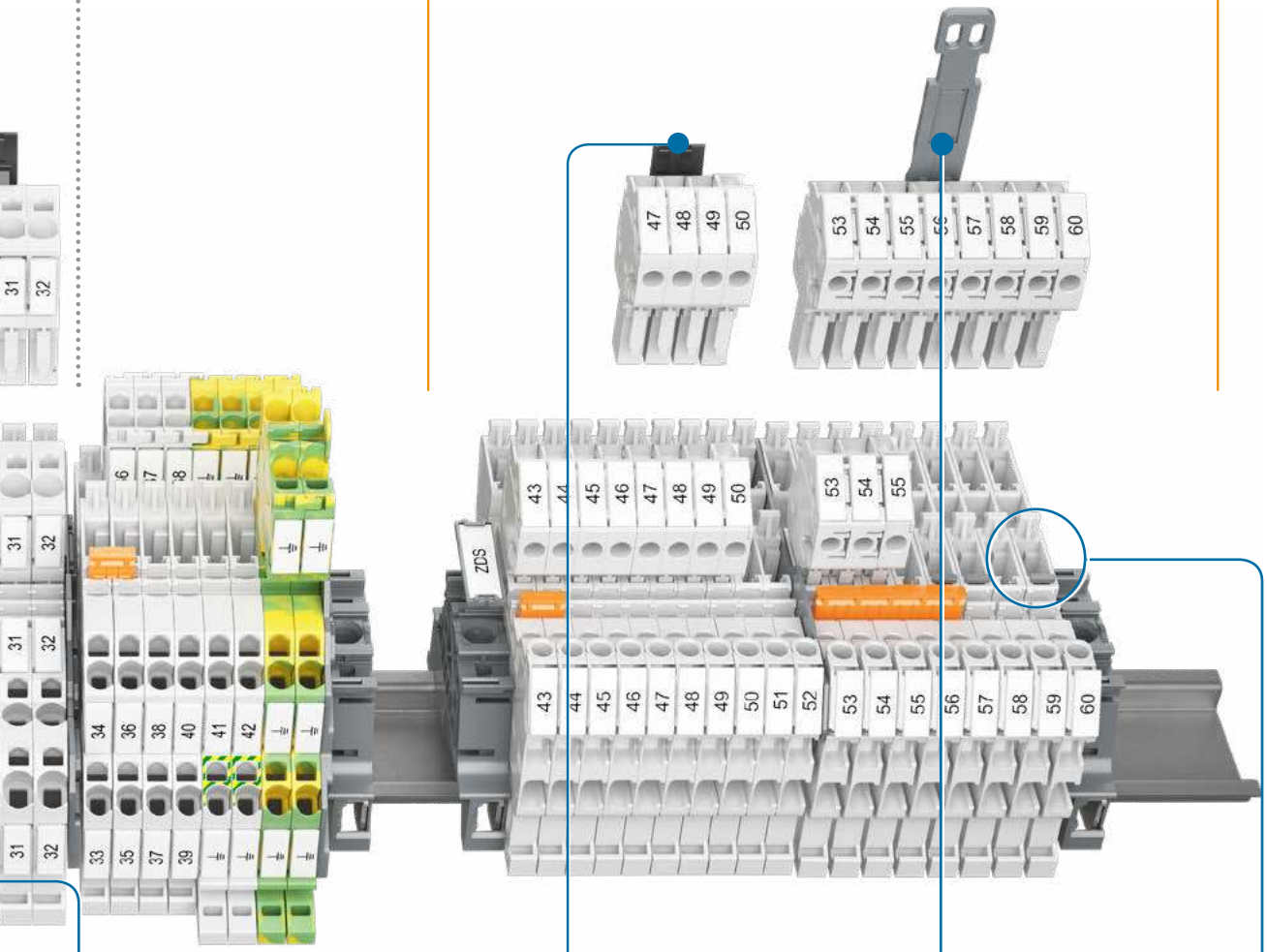

End section
No need of end section between 2.5 and 4 mm² terminal blocks

Cable clamp
Secure the wires ontov the plug when pulling the plug assembly

Locking device
Secure plug and wiring against accidental pulling

Convenient coding pegs
Guarantee error free plugs insertion

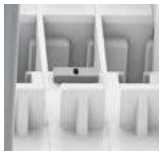

1SNK164013S0201

4

PI-Spring Pluggable

Single deck

Section		Feed-through		Ground	Feed-through			Ground	
2.5 mm²	12 AWG	ZD2.5-11	ZD2.5-22	ZD2.5-22-PE	ZDK2.5-11	ZDK2.5-21	ZDK2.5-22	ZDK2.5-11-PE	ZDK2.5-22-PE
4 mm²	10 AWG						ZDK4-22		

Double deck

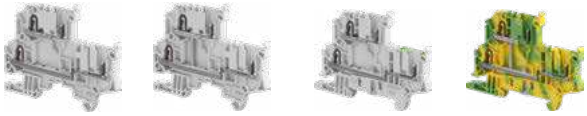

Section		Feed-through		Feed-through + ground	Ground
2.5 mm²	12 AWG	ZDK2.5-D2	ZDK2.5-D1	ZDK2.5-D2-PE	ZDK2.5-D1-PE
4 mm²	10 AWG				

PI-Spring female plugs

Section		Closed		Closed		Closed		Closed		Closed		Closed	
2.5 mm²	12 AWG	CDK2.5	CDK2.5-E	CDK2.5-J	CDK2.5-J-E	CDK2.5-2P-J	CDK2.5-2P-J-E	CDK2.5-PE	CDK2.5-PE-E	CDK2.5-J-PE	CDK2.5-J-PE-E	CDK2.5-2P-J-PE	CDK2.5-2P-J-PE
4 mm²	10 AWG	CDK4	CDK4-E										

Screw clamp Pluggable

Single deck

Section		Feed-through
4 mm²	10 AWG	ZDS4-22 ZDS4-22-R1

Screw clamp female plugs

Section		Closed	
4 mm²	10 AWG	CDS4 CDS4-R1	CDS4-E

clamp - Channels for jumpering or testing - test socket - Blown-fuse indicator - male pluggable clamp - female pluggable clamp

1SNK164018S0201

PI-Spring Pluggable

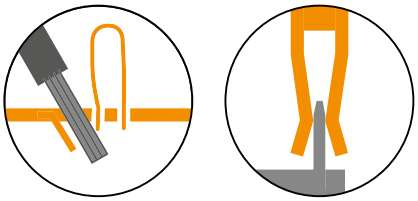

ZD2.5-11 PI-Spring pluggable terminal blocks

Feed-through - 5.2 mm 0.205 in spacing

2.5 mm²

12 AWG

ZD2.5-11

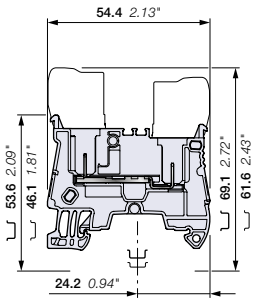

5.2 mm 0.205 in spacing

CDK2.5 CDK2.5-E

Description

- Increase your productivity with pluggable terminal blocks: possibility of pre-produced plugs harnesses, time saving plug and play assembly, reduced transportation panels preparation and final installation, easily connect sub-assemblies together,
- Simplify and secure your installation: in site faulty connection errors are eliminated, prior connection testing is eased and reliable, test connectors (TC5) withstanding 10 000 operations are compatible for convenient testing.

Ordering details

Description		Color	Type	Part Number		Pkg qty	Weight (1 pce) g
Feed-through	2 connections	Grey	ZD2.5-11	1SNK805016R0000		50	5.66

Main technical data

Connecting capacity		IEC	UL - CSA
1 conductor per clamp	Rigid - Solid / Stranded	0.2 ... 4 mm²	26 ... 12 AWG
	Flexible	0.22 ... 2.5 mm²	
	with non insulated ferrule	0.22 ... 2.5 mm²	26 ... 14 AWG
	with insulated ferrule	0.22 ... 2.5 mm²	26 ... 14 AWG
2 conductors per clamp	Flexible with twin ferrule	0.22 ... 0.5 mm²	26 ... 20 AWG
Rated current / Rated cross section		22 A / 2.5 mm²	20 A / 12 AWG
Rated short-time withstand current (1s)		300 A	
Rated voltage		1000 V	600 V
Impulse withstand voltage		8000 V	
Protection		IP20	NEMA 1

Mounting instructions

Rail		TH 35-7.5, TH 35-15
Wire stripping length		11 mm 0.433 in
Tool (for flexible conductor without ferrule)		Ø 3.5 mm Ø 0.138 in

The connecting capacity data for one Rigid - Solid / Stranded - Flexible conductor (when applicable) is a mandatory information required by IEC, UL and CSA standards (Copper conductors).All other data are provided as supplementary information only. For more details, please consult our CB, UL or CSA certificates and technical datasheet available on http://www.TE.com

CE CB RoHS USR CNR CSA EAC BV

Female plugs

Description		Color	Type	Part Number		Pkg qty	Weight (1 pce) g
Female plugs	1 pole	Grey	CDK2.5	1SNK805712R0000		50	2.80
Female plugs without outer nubs - Closed	1 pole		CDK2.5-E	1SNK805713R0000		50	2.88

15 poles max.

Accessories

	Description			Color	Type	Part Number		Pkg qty	Weight (1 pce) g
1	End stops	5.2 mm	0.205 in	Dark grey	BAZ1	1SNK900002R0000		50	5.30
2	End sections	1.5 mm	0.059 in	Dark grey	EDK2.5-11	1SNK805915R0000		20	1.49
3	Jumper bars	2 poles	32 A (IEC)	Orange	JB5-2	1SNK905302R0000		50	1.30
		3 poles	32 A (IEC)		JB5-3	1SNK905303R0000		50	2.00
		4 poles	32 A (IEC)		JB5-4	1SNK905304R0000		50	2.70
		5 poles	32 A (IEC)		JB5-5	1SNK905305R0000		50	3.50
		10 poles	32 A (IEC)		JB5-10	1SNK905310R0000		30	7.10
		50 poles	32 A (IEC)		JB5-50	1SNK905350R0000		10	36.00
4	Cross spacing jumpers	3 poles	32 A (IEC)	Orange	JB85-3	1SNK900603R0000		10	2.80
5	Circuit separators	3 mm	0.118 in	Dark grey	CS-R2	1SNK900106R0000		20	3.80
6	Test adapters	For test plugs DIA 2 mm 0.079 in		Dark grey	TP2	1SNK900203R0000		20	1.70
		For test plugs DIA 4 mm 0.157 in			TP4	1SNK900205R0000		20	2.40
7	Test connectors	5.2 mm 0.205 in spacing		Dark grey	TC5	1SNK900200R0000		10	5.20
		End module, 5.2 mm 0.205 in			TC5-R1	1SNK900201R0000		10	5.20
8	Coding pegs			Dark grey	COP-ZD	1SNK900636R0000		10	3.57
9	Terminal block markers	Blank card		White	MC512	1SNK140000R0000		22	9.00
					MC512PA	1SNK149999R0000		20	10.00
		Blank marker			MG-CPM 13 41790	1SNB041790R0512		1960	0.236
		Universal wire markers holder		Grey	UMH	1SNK900611R0000		10	0.20

Complete list of accessories is indicated in the terminal block datasheet including end stops.
Some accessories such as jumper bars may modify the terminal block's ratings: Complete information available in the accessories section of the catalog.

Technical data valid for copper conductors only.

1SNK164020S0201

ZD2.5-22 PI-Spring pluggable terminal blocks

Feed-through - 5.2 mm 0.205 in spacing

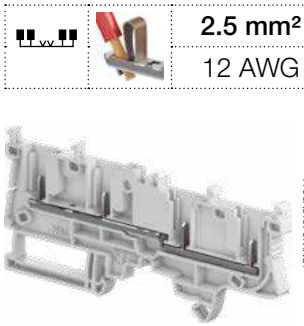

ZD2.5-22

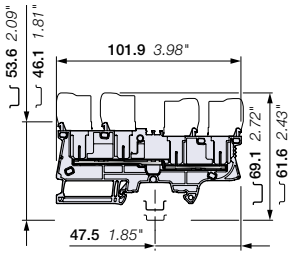

5.2 mm 0.205 in spacing

CDK2.5 CDK2.5-E

	2.5 mm²
	12 AWG

Description

- Increase your productivity with pluggable terminal blocks: possibility of pre-produced plugs harnesses, time saving plug and play assembly, reduced transportation panels preparation and final installation, easily connect sub-assemblies together,
- Simplify and secure your installation: in site faulty connection errors are eliminated, prior connection testing is eased and reliable, test connectors (TC5) withstanding 10 000 operations are compatible for convenient testing.

Ordering details

Description		Color	Type	Part Number		Pkg qty	Weight (1 pce) g
Feed-through	4 connections	Grey	ZD2.5-22	1SNK805017R0000		50	12.00

Main technical data

Connecting capacity		IEC	UL - CSA
1 conductor per clamp	Rigid - Solid / Stranded	0.2 ... 4 mm²	26 ... 12 AWG
	Flexible	0.22 ... 2.5 mm²	
	with non insulated ferrule	0.22 ... 2.5 mm²	26 ... 14 AWG
	with insulated ferrule	0.22 ... 2.5 mm²	26 ... 14 AWG
2 conductors per clamp	Flexible with twin ferrule	0.22 ... 0.5 mm²	26 ... 20 AWG
Rated current / Rated cross section		22 A / 2.5 mm²	20 A / 12 AWG
Rated short-time withstand current (1s)		300 A	
Rated voltage		1000 V	600 V
Impulse withstand voltage		8000 V	
Protection		IP20	NEMA 1

Mounting instructions

Rail		TH 35-7.5, TH 35-15
Wire stripping length		11 mm 0.433 in
Tool (for flexible conductor without ferrule)		Flat screwdriver Ø 3.5 mm Ø 0.138 in

The connecting capacity data for one Rigid - Solid / Stranded - Flexible conductor (when applicable) is a mandatory information required by IEC, UL and CSA standards (Copper conductors).All other data are provided as supplementary information only. For more details, please consult our CB, UL or CSA certificates and technical datasheet available on http://www.TE.com

CE CB RoHS USR CNR CSA EAC BV

Female plugs

Description		Color	Type	Part Number		Pkg qty	Weight (1 pce) g
Female plugs	1 pole	Grey	CDK2.5	1SNK805712R0000		50	2.80
Female plugs without outer nubs - Closed	1 pole		CDK2.5-E	1SNK805713R0000		50	2.88

15 poles max.

Accessories

	Description			Color	Type	Part Number		Pkg qty	Weight (1 pce) g
1	End stops	5.2 mm	0.205 in	Dark grey	BAZ1	1SNK900002R0000		50	5.30
2	End sections	2.0 mm	0.079 in	Dark grey	ED2.5-22	1SNK805917R0000		20	3.64
3	Jumper bars	2 poles	32 A (IEC)	Orange	JB5-2	1SNK905302R0000		50	1.30
		3 poles	32 A (IEC)		JB5-3	1SNK905303R0000		50	2.00
		4 poles	32 A (IEC)		JB5-4	1SNK905304R0000		50	2.70
		5 poles	32 A (IEC)		JB5-5	1SNK905305R0000		50	3.50
		10 poles	32 A (IEC)		JB5-10	1SNK905310R0000		30	7.10
		50 poles	32 A (IEC)		JB5-50	1SNK905350R0000		10	36.00
4	Cross spacing jumpers	3 poles	32 A (IEC)	Orange	JB85-3	1SNK900603R0000		10	2.80
5	Circuit separators	3 mm	0.118 in	Dark grey	CS-R3	1SNK900107R0000		20	6.40
6	Test adapters	For test plugs DIA 2 mm 0.079 in		Dark grey	TP2	1SNK900203R0000		20	1.70
		For test plugs DIA 4 mm 0.157 in			TP4	1SNK900205R0000		20	2.40
7	Test connectors	5.2 mm 0.205 in spacing		Dark grey	TC5	1SNK900200R0000		10	5.20
		End module, 5.2 mm 0.205 in			TC5-R1	1SNK900201R0000		10	5.20
8	Coding pegs			Dark grey	COP-ZD	1SNK900636R0000		10	3.57
9	Terminal block markers	Blank card		White	MC512	1SNK140000R0000		22	9.00
					MC512PA	1SNK149999R0000		20	10.00
		Blank marker			MG-CPM 13 41790	1SNB041790R0512		1960	0.236
		Universal wire markers holder		Grey	UMH	1SNK900611R0000		10	0.20

Complete list of accessories is indicated in the terminal block datasheet including end stops.
Some accessories such as jumper bars may modify the terminal block's ratings: Complete information available in the accessories section of the catalog.

Technical data valid for copper conductors only.

1SNK164021S0201

4

ZD2.5-22-PE PI-Spring pluggable terminal blocks

Ground - 5.2 mm 0.205 in spacing

2.5 mm²

12 AWG

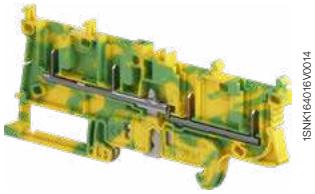

ZD2.5-22-PE

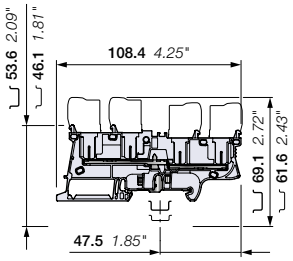

5.2 mm 0.205 in spacing

Description

- Increase your productivity with pluggable terminal blocks: possibility of pre-produced plugs harnesses, time saving plug and play assembly, reduced transportation panels preparation and final installation, easily connect sub-assemblies together,
- Simplify and secure your installation: in site faulty connection errors are eliminated, prior connection testing is eased and reliable, test connectors (TC5) withstanding 10 000 operations are compatible for convenient testing.

Ordering details

Description		Color	Type	Part Number		Pkg qty	Weight (1 pce) g
Ground	4 connections	Green-yellow	ZD2.5-22-PE	1SNK805156R0000		50	14.80

Main technical data

Connecting capacity		IEC	UL - CSA
1 conductor per clamp	Rigid - Solid / Stranded	0.2 ... 4 mm²	26 ... 12 AWG
	Flexible	0.22 ... 2.5 mm²	
	with non insulated ferrule	0.22 ... 2.5 mm²	26 ... 14 AWG
	with insulated ferrule	0.22 ... 2.5 mm²	26 ... 14 AWG
Rated cross section		2.5 mm²	12 AWG
Rated short-time withstand current (1s)		300 A	396 A
Protection		IP20	NEMA 1

Mounting instructions

Rail		TH 35-7.5, TH 35-15
Wire stripping length		11 mm 0.433 in
Tool (for flexible conductor without ferrule)		Flat screwdriver Ø 3.5 mm Ø 0.138 in

The connecting capacity data for one Rigid - Solid / Stranded - Flexible conductor (when applicable) is a mandatory information required by IEC, UL and CSA standards (Copper conductors).All other data are provided as supplementary information only. For more details, please consult our CB, UL or CSA certificates and technical datasheet available on http://www.TE.com

CE CB RoHS USR CNR CSA EAC BV

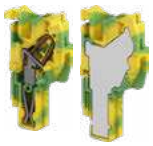

CDK2.5-PE CDK2.5-PE-E

Available in Q3.2019

Female plugs

Description		Color	Type	Part Number		Pkg qty	Weight (1 pce) g
Female plugs	1 pole	Green-yellow	CDK2.5-PE	1SNK805750R0000		50	2.80
Female plugs without outer nubs - Closed	1 pole		CDK2.5-PE-E	1SNK805753R0000		50	2.88

15 poles max.

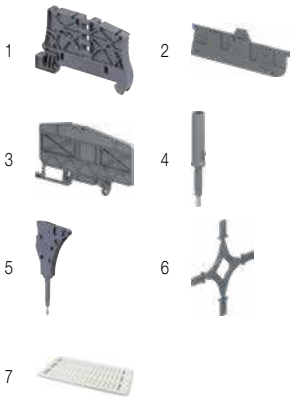

Accessories

	Description			Color	Type	Part Number		Pkg qty	Weight (1 pce) g
1	End stops	5.2 mm	0.205 in	Dark grey	BAZ1	1SNK900002R0000		50	5.30
2	End sections	2.0 mm	0.079 in	Dark grey	ED2.5-22	1SNK805917R0000		20	3.64
3	Circuit separators	3 mm	0.118 in	Dark grey	CS-R3	1SNK900107R0000		20	6.40
4	Test adapters	For test plugs DIA 2 mm 0.079 in		Dark grey	TP2	1SNK900203R0000		20	1.70
		For test plugs DIA 4 mm 0.157 in			TP4	1SNK900205R0000		20	2.40
5	Test connectors	5.2 mm 0.205 in spacing		Dark grey	TC5	1SNK900200R0000		10	5.20
		End module, 5.2 mm 0.205 in			TC5-R1	1SNK900201R0000		10	5.20
6	Coding pegs			Dark grey	COP-ZD	1SNK900636R0000		10	3.57
7	Terminal block markers	Blank card		White	MC512	1SNK140000R0000		22	9.00
					MC512PA	1SNK149999R0000		20	10.00
		Blank marker			MG-CPM 13 41790	1SNB041790R0512		1960	0.236
		Universal wire markers holder		Grey	UMH	1SNK900611R0000		10	0.20

Complete list of accessories is indicated in the terminal block datasheet including end stops.
Some accessories such as jumper bars may modify the terminal block's ratings: Complete information available in the accessories section of the catalog.

Technical data valid for copper conductors only.

1SNK164022S0201

ZDK2.5-11 PI-Spring pluggable terminal blocks

Feed-through - 5.2 mm 0.205 in spacing

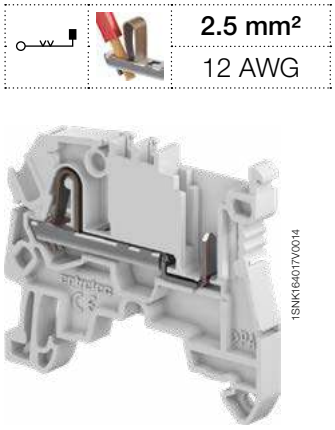

2.5 mm²

12 AWG

1SNK164017V0014

ZDK2.5-11

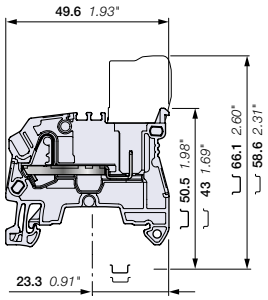

5.2 mm 0.205 in spacing

CDK2.5 CDK2.5-E CDK2.5-BL CDK2.5-BL-E

Description

- Increase your productivity with pluggable terminal blocks: possibility of pre-produced plugs harnesses, time saving plug and play assembly, reduced transportation panels preparation and final installation, easily connect sub-assemblies together,
- Simplify and secure your installation: in site faulty connection errors are eliminated, prior connection testing is eased and reliable, test connectors (TC5) withstanding 10 000 operations are compatible for convenient testing.

Ordering details

Description		Color	Type	Part Number		Pkg qty	Weight (1 pce) g
Feed-through	2 connections	Grey	ZDK2.5-11	1SNK805015R0000		50	7.00
		Blue	ZDK2.5-11-BL	1SNK805025R0000		50	7.00

Main technical data

Connecting capacity		IEC	UL - CSA
1 conductor per clamp	Rigid - Solid / Stranded	0.2 ... 4 mm²	26 ... 12 AWG
	Flexible	0.22 ... 2.5 mm²	
	with non insulated ferrule	0.22 ... 2.5 mm²	26 ... 14 AWG
	with insulated ferrule	0.22 ... 2.5 mm²	26 ... 14 AWG
2 conductors per clamp	Flexible with twin ferrule	0.22 ... 0.5 mm²	26 ... 20 AWG
Rated current / Rated cross section		24 A / 2.5 mm²	20 A / 12 AWG
Rated short-time withstand current (1s)		300 A	
Rated voltage		1000 V	600 V
Impulse withstand voltage		8000 V	
Protection		IP20	NEMA 1

Mounting instructions

Rail	TH 35-7.5, TH 35-15
Wire stripping length	11 mm 0.433 in
Tool (for flexible conductor without ferrule)	Flat screwdriver Ø 3.5 mm Ø 0.138 in

The connecting capacity data for one Rigid - Solid / Stranded - Flexible conductor (when applicable) is a mandatory information required by IEC, UL and CSA standards (Copper conductors).All other data are provided as supplementary information only. For more details, please consult our CB, UL or CSA certificates and technical datasheet available on http://www.TE.com

CE CB RoHS USR CNR CSA EAC BV

Female plugs

Description		Color	Type	Part Number		Pkg qty	Weight (1 pce) g
Female plugs	1 pole	Grey	CDK2.5	1SNK805712R0000		50	2.80
Female plugs without outer nubs - Closed	1 pole		CDK2.5-E	1SNK805713R0000		50	2.88
Female plugs	1 pole	Blue	CDK2.5-BL	1SNK805742R0000		50	2.80
Female plugs without outer nubs - Closed	1 pole		CDK2.5-BL-E	1SNK805743R0000		50	2.88

15 poles max.

Accessories

	Description			Color	Type	Part Number		Pkg qty	Weight (1 pce) g
1	End stops	5.2 mm	0.205 in	Dark grey	BAZ1	1SNK900002R0000		50	5.30
2	End sections	1.5 mm	0.059 in	Dark grey	EDK2.5-11	1SNK805915R0000		20	1.49
3	Jumper bars	2 poles	32 A (IEC)	Orange	JB5-2	1SNK905302R0000		50	1.30
		3 poles	32 A (IEC)		JB5-3	1SNK905303R0000		50	2.00
		4 poles	32 A (IEC)		JB5-4	1SNK905304R0000		50	2.70
		5 poles	32 A (IEC)		JB5-5	1SNK905305R0000		50	3.50
		10 poles	32 A (IEC)		JB5-10	1SNK905310R0000		30	7.10
		50 poles	32 A (IEC)		JB5-50	1SNK905350R0000		10	36.00
4	Cross spacing jumpers	3 poles	32 A (IEC)	Orange	JB85-3	1SNK900603R0000		10	2.80
5	Circuit separators	3 mm	0.118 in	Dark grey	CS-R2	1SNK900106R0000		20	3.80
6	Test adapters	For test plugs DIA 2 mm 0.079 in		Dark grey	TP2	1SNK900203R0000		20	1.70
		For test plugs DIA 4 mm 0.157 in			TP4	1SNK900205R0000		20	2.40
7	Test connectors	5.2 mm 0.205 in spacing		Dark grey	TC5	1SNK900200R0000		10	5.20
		End module, 5.2 mm 0.205 in			TC5-R1	1SNK900201R0000		10	5.20
8	Coding pegs			Dark grey	COP-ZD	1SNK900636R0000		10	3.57
9	Terminal block markers	Blank card		White	MC512	1SNK140000R0000		22	9.00
					MC512PA	1SNK149999R0000		20	10.00
		Blank marker			MG-CPM 13 41790	1SNB041790R0512		1960	0.236
		Universal wire markers holder		Grey	UMH	1SNK900611R0000		10	0.20

Complete list of accessories is indicated in the terminal block datasheet including end stops.
Some accessories such as jumper bars may modify the terminal block's ratings: Complete information available in the accessories section of the catalog.

Technical data valid for copper conductors only.

1SNK164023S0201

4

ZDK2.5-21 PI-Spring pluggable terminal blocks

Feed-through - 5.2 mm 0.205 in spacing

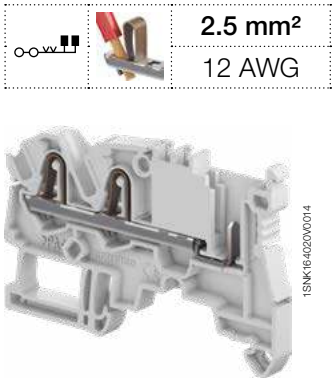

2.5 mm²
12 AWG

1SNK164020V0014

ZDK2.5-21

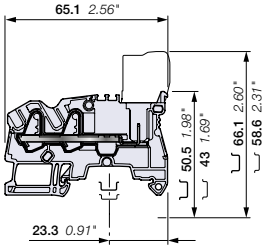

5.2 mm 0.205 in spacing

Description

- Increase your productivity with pluggable terminal blocks: possibility of pre-produced plugs harnesses, time saving plug and play assembly, reduced transportation panels preparation and final installation, easily connect sub-assemblies together,
- Simplify and secure your installation: in site faulty connection errors are eliminated, prior connection testing is eased and reliable, test connectors (TC5) withstanding 10 000 operations are compatible for convenient testing.

Ordering details

Description		Color	Type	Part Number		Pkg qty	Weight (1 pce) g
Feed-through	3 connections	Grey	ZDK2.5-21	1SNK805014R0000		50	7.47

Main technical data

Connecting capacity		IEC	UL - CSA
1 conductor per clamp	Rigid - Solid / Stranded	0.2 ... 4 mm²	26 ... 12 AWG
	Flexible	0.22 ... 2.5 mm²	
	with non insulated ferrule	0.22 ... 2.5 mm²	26 ... 14 AWG
	with insulated ferrule	0.22 ... 2.5 mm²	26 ... 14 AWG
2 conductors per clamp	Flexible with twin ferrule	0.22 ... 0.5 mm²	26 ... 20 AWG
Rated current / Rated cross section		24 A / 2.5 mm²	20 A / 12 AWG
Rated short-time withstand current (1s)		300 A	
Rated voltage		1000 V	600 V
Impulse withstand voltage		8000 V	
Protection		IP20	NEMA 1

Mounting instructions

Rail		TH 35-7.5, TH 35-15
Wire stripping length		11 mm 0.433 in
Tool (for flexible conductor without ferrule)		Flat screwdriver Ø 3.5 mm Ø 0.138 in

The connecting capacity data for one Rigid - Solid / Stranded - Flexible conductor (when applicable) is a mandatory information required by IEC, UL and CSA standards (Copper conductors).All other data are provided as supplementary information only. For more details, please consult our CB, UL or CSA certificates and technical datasheet available on http://www.TE.com

CE | CB | RoHS | USR CNR | CSA | EAC | BV

CDK2.5 CDK2.5-E

Female plugs

Description		Color	Type	Part Number		Pkg qty	Weight (1 pce) g
Female plugs	1 pole	Grey	CDK2.5	1SNK805712R0000		50	2.80
Female plugs without outer nubs - Closed	1 pole		CDK2.5-E	1SNK805713R0000		50	2.88

15 poles max.

Accessories

	Description			Color	Type	Part Number		Pkg qty	Weight (1 pce) g
1	End stops	5.2 mm	0.205 in	Dark grey	BAZ1	1SNK900002R0000		50	5.30
2	End sections	1.5 mm	0.059 in	Dark grey	EDK2.5-21	1SNK805914R0000		20	1.90
3	Jumper bars	2 poles	32 A (IEC)	Orange	JB5-2	1SNK905302R0000		50	1.30
		3 poles	32 A (IEC)		JB5-3	1SNK905303R0000		50	2.00
		4 poles	32 A (IEC)		JB5-4	1SNK905304R0000		50	2.70
		5 poles	32 A (IEC)		JB5-5	1SNK905305R0000		50	3.50
		10 poles	32 A (IEC)		JB5-10	1SNK905310R0000		30	7.10
		50 poles	32 A (IEC)		JB5-50	1SNK905350R0000		10	36.00
4	Cross spacing jumpers	3 poles	32 A (IEC)	Orange	JB85-3	1SNK900603R0000		10	2.80
5	Circuit separators	3 mm	0.118 in	Dark grey	CS-R3	1SNK900107R0000		20	6.40
6	Test adapters	For test plugs DIA 2 mm 0.079 in		Dark grey	TP2	1SNK900203R0000		20	1.70
		For test plugs DIA 4 mm 0.157 in			TP4	1SNK900205R0000		20	2.40
7	Test connectors	5.2 mm 0.205 in spacing		Dark grey	TC5	1SNK900200R0000		10	5.20
		End module, 5.2 mm 0.205 in			TC5-R1	1SNK900201R0000		10	5.20
8	Coding pegs			Dark grey	COP-ZD	1SNK900636R0000		10	3.57
9	Terminal block markers	Blank card		White	MC512	1SNK140000R0000		22	9.00
					MC512PA	1SNK149999R0000		20	10.00
		Blank marker			MG-CPM 13 41790	1SNB041790R0512		1960	0.236
		Universal wire markers holder		Grey	UMH	1SNK900611R0000		10	0.20

Complete list of accessories is indicated in the terminal block datasheet including end stops.
Some accessories such as jumper bars may modify the terminal block's ratings: Complete information available in the accessories section of the catalog.

Technical data valid for copper conductors only.

1SNK164025S0201

ZDK2.5-22 PI-Spring pluggable terminal blocks

Feed-through - 5.2 mm 0.205 in spacing

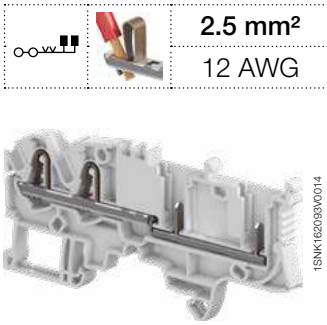

ZDK2.5-22

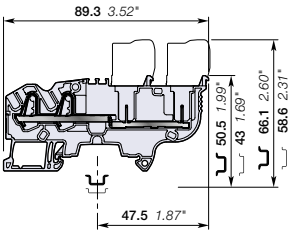

5.2 mm 0.205 in spacing

2.5 mm²
12 AWG

Description

- Increase your productivity with pluggable terminal blocks: possibility of pre-produced plugs harnesses, time saving plug and play assembly, reduced transportation panels preparation and final installation, easily connect sub-assemblies together,
- Simplify and secure your installation: in site faulty connection errors are eliminated, prior connection testing is eased and reliable, test connectors (TC5) withstanding 10 000 operations are compatible for convenient testing.

Ordering details

Description		Color	Type	Part number		Pkg qty	Weight (1 pce) g
Feed-through	4 connections	Grey	ZDK2.5-22	1SNK805010R0000		50	9.60
Feed-through	4 connections	Blue	ZDK2.5-22-BL	1SNK805020R0000		50	9.60

Main technical data

Connecting capacity		IEC	UL - CSA
1 conductor per clamp	Rigid - Solid / Stranded	0.2 ... 4 mm²	26 ... 12 AWG
	Flexible	0.22 ... 2.5 mm²	
	with non insulated ferrule	0.22 ... 2.5 mm²	26 ... 14 AWG
	with insulated ferrule	0.22 ... 2.5 mm²	26 ... 14 AWG
2 conductors per clamp	Flexible with twin ferrule	0.22 ... 0.5 mm²	26 ... 20 AWG
Rated current / Rated cross section		24 A / 2.5 mm²	22 A / 12 AWG
Rated short-time withstand current (1s)		300 A	
Rated voltage		1000 V	600 V
Impulse withstand voltage		8000 V	
Protection		IP20	NEMA 1

Mounting instructions

Rail		TH 35-7.5, TH 35-15
Wire stripping length		11 mm 0.433 in
Tool (for flexible conductor without ferrule)		Flat screwdriver Ø 3.5 mm Ø 0.138 in

The connecting capacity data for one Rigid - Solid / Stranded - Flexible conductor (when applicable) is a mandatory information required by IEC, UL and CSA standards (Copper conductors). All other data are provided as supplementary information only. For more details, please consult our CB, UL or CSA certificates and technical datasheet available on http://www.TE.com

CE CB RoHS USR CNR CSA EAC BV

CDK2.5 CDK2.5-E

Female plugs

Description		Color	Type	Part number		Pkg qty	Weight (1 pce) g
Female plugs	1 pole	Grey	CDK2.5	1SNK805712R0000		50	2.80
Female plugs without outer nubs - Closed			CDK2.5-E	1SNK805713R0000		50	2.80

15 poles max.

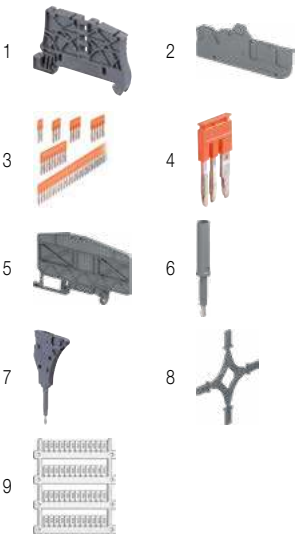

Accessories

	Description			Color	Type	Part number		Pkg qty	Weight (1 pce) g
1	**End stops**	5.2 mm	0.205 in	Dark grey	BAZ1	1SNK900002R0000		50	5.30
2	**End sections**	2.2 mm	0.087 in	Dark grey	EDK2.5-22	1SNK805910R0000		20	3.15
3	**Jumper bars**	2 poles	32 A (IEC)	Orange	JB5-2	1SNK905302R0000		50	1.30
		3 poles	32 A (IEC)		JB5-3	1SNK905303R0000		50	2.00
		4 poles	32 A (IEC)		JB5-4	1SNK905304R0000		50	2.70
		5 poles	32 A (IEC)		JB5-5	1SNK905305R0000		50	3.50
		10 poles	32 A (IEC)		JB5-10	1SNK905310R0000		30	7.10
		50 poles	32 A (IEC)		JB5-50	1SNK905350R0000		10	36.00
4	**Cross spacing jumpers**	3 poles	32 A (IEC)	Orange	JB85-3	1SNK900603R0000		10	2.80
5	**Circuit separators**	3 mm	0.118 in	Dark grey	CS-R3	1SNK900107R0000		20	6.40
6	**Test adapters**	For test plugs DIA 2 mm 0.079 in		Dark grey	TP2	1SNK900203R0000		20	1.70
		For test plugs DIA 4 mm 0.157 in			TP4	1SNK900205R0000		20	2.40
7	**Test connectors**	5.2 mm 0.205 in spacing		Dark grey	TC5	1SNK900200R0000		10	5.20
		End module, 5.2 mm 0.205 in			TC5-R1	1SNK900201R0000		10	5.20
8	**Coding pegs**			Dark grey	COP-ZD	1SNK900636R0000		10	3.57
9	**Terminal block markers**	Blank marker		White	MG-CPM 13 41790	1SNB041790R0512		1960	0.23
		Blank card			MC512	1SNK140000R0000		22	9.00
					MC512PA	1SNK149999R0000		20	10.00
		Universal wire markers holder		Grey	UMH	1SNK900611R0000		10	0.20

Complete list of accessories is indicated in the terminal block datasheet including end stops.
Some accessories such as jumper bars may modify the terminal block's ratings: Complete information available in the accessories section of the catalog.

Technical data valid for copper conductors only.

1SNK164001S0201

4

ZDK4-22 PI-Spring pluggable terminal blocks

Feed-through - 6 mm 0.236 in spacing

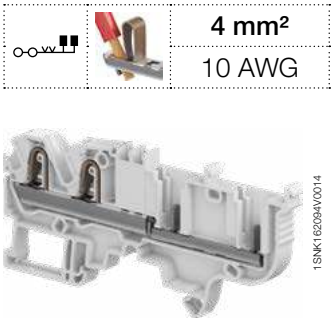

1SNK162094V0014

ZDK4-22

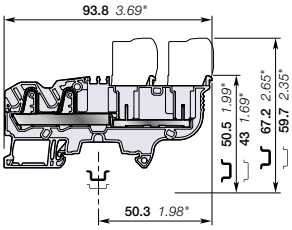

6 mm 0.236 in spacing

4 mm²
10 AWG

Description

- Increase your productivity with pluggable terminal blocks: possibility of pre-produced plugs harnesses, time saving plug and play assembly, reduced transportation panels preparation and final installation, easily connect sub-assemblies together,
- Simplify and secure your installation: in site faulty connection errors are eliminated, prior connection testing is eased and reliable, test connectors (TC5-R1 + ES-TC6) withstanding 10 000 operations are compatible for convenient testing.

Ordering details

Description		Color	Type	Part Number		Pkg qty	Weight (1 pce) g
Feed-through	4 connections	Grey	ZDK4-22	1SNK806010R0000		50	14.30

Main technical data

Connecting capacity		IEC	UL - CSA
1 conductor per clamp	Rigid - Solid / Stranded	0.5 ... 6 mm²	26 ... 10 AWG
	Flexible	0.5 ... 4 mm²	
	with non insulated ferrule	0.5 ... 4 mm²	26 ... 12 AWG
	with insulated ferrule	0.5 ... 4 mm²	26 ... 12 AWG
2 conductors per clamp	Flexible with twin ferrule	0.5 ... 1 mm²	26 ... 18 AWG
Rated current / Rated cross section		30 A / 4 mm²	30 A / 10 AWG
Rated short-time withstand current (1s)		480 A	
Rated voltage		1000 V	600 V
Impulse withstand voltage		8000 V	
Protection		IP20	NEMA 1

Mounting instructions

Rail		TH 35-7.5, TH 35-15
Wire stripping length		12.5 mm 0.492 in
Tool (for flexible conductor without ferrule)		Flat screwdriver Ø 3.5 mm Ø 0.138 in

The connecting capacity data for one Rigid - Solid / Stranded - Flexible conductor (when applicable) is a mandatory information required by IEC, UL and CSA standards (Copper conductors). All other data are provided as supplementary information only. For more details, please consult our CB, UL or CSA certificates and technical datasheet available on http://www.TE.com

CE | CB | RoHS | USR CNR | CSA | EAC | BV

4

CDK4 CDK4-E

Female plugs

Description		Color	Type	Part Number		Pkg qty	Weight (1 pce) g
Female plugs	1 pole	Grey	CDK4	1SNK806712R0000		50	3.80
Female plugs without outer nubs - Closed			CDK4-E	1SNK806713R0000		50	4.50

15 poles max.

1

Accessories

	Description			Color	Type	Part Number		Pkg qty	Weight (1 pce) g
1	**End stops**	5.2 mm	0.205 in	Dark grey	BAZ1	1SNK900002R0000		50	5.30
2	**End sections**	2.2 mm	0.087 in	Dark grey	EDK2.5-22	1SNK805910R0000		20	3.15
3	**Jumper bars**	2 poles	41 A (IEC)	Orange	JB6-2	1SNK906302R0000		50	1.30
		3 poles	41 A (IEC)		JB6-3	1SNK906303R0000		50	2.10
		4 poles	41 A (IEC)		JB6-4	1SNK906304R0000		50	2.90
		5 poles	41 A (IEC)		JB6-5	1SNK906305R0000		50	3.60
		10 poles	41 A (IEC)		JB6-10	1SNK906310R0000		20	7.40
		50 poles	41 A (IEC)		JB6-50	1SNK906350R0000		10	38.10
4	**Cross spacing jumpers**	3 poles	32 A (IEC)	Orange	JB85-3	1SNK900603R0000		10	2.80
5	**Circuit separators**	3 mm	0.118 in	Dark grey	CS-R3	1SNK900107R0000		20	6.40
6	**Test adapters**	For test plugs DIA 2 mm 0.079 in		Dark grey	TP2	1SNK900203R0000		20	1.70
		For test plugs DIA 4 mm 0.157 in			TP4	1SNK900205R0000		20	2.40
7	**Test connectors**	End module, 5.2 mm 0.205 in		Dark grey	TC5-R1	1SNK900201R0000		10	5.20
8	**Spacers**	0.8 mm	0.031 in	Dark grey	ES-TC6	1SNK900105R0000		10	0.80
9	**Coding pegs**			Dark grey	COP-ZD	1SNK900636R0000		10	3.57
10	**Terminal block markers**	Blank marker		White	MG-CPM 13 41791	1SNB041791R0612		1680	0.27
		Blank card			MC612	1SNK150000R0000		22	10.00
					MC612PA	1SNK159999R0000		20	11.00
		Universal wire markers holder		Grey	UMH	1SNK900611R0000		10	0.20

Complete list of accessories is indicated in the terminal block datasheet including end stops.
Some accessories such as jumper bars may modify the terminal block's ratings: Complete information available in the accessories section of the catalog.

Technical data valid for copper conductors only.

1SNK164002S0201

ZDK2.5-11-PE PI-Spring pluggable terminal blocks
Ground - 5.2 mm 0.205 in spacing

2.5 mm²
12 AWG

ZDK2.5-11-PE

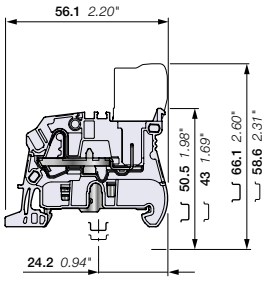

5.2 mm 0.205 in spacing

Description

- Increase your productivity with pluggable terminal blocks: possibility of pre-produced plugs harnesses, time saving plug and play assembly, reduced transportation panels preparation and final installation, easily connect sub-assemblies together,
- Simplify and secure your installation: in site faulty connection errors are eliminated, prior connection testing is eased and reliable, test connectors (TC5) withstanding 10 000 operations are compatible for convenient testing.

Ordering details

Description		Color	Type	Part Number		Pkg qty	Weight (1 pce) g
Ground	2 connections	Green-yellow	ZDK2.5-11-PE	1SNK805150R0000		50	9.62

Main technical data

Connecting capacity		IEC	UL - CSA
1 conductor per clamp	Rigid - Solid / Stranded	0.2 ... 4 mm²	26 ... 12 AWG
	Flexible	0.22 ... 2.5 mm²	
	with non insulated ferrule	0.22 ... 2.5 mm²	26 ... 14 AWG
	with insulated ferrule	0.22 ... 2.5 mm²	26 ... 14 AWG
Rated cross section		2.5 mm²	12 AWG
Rated short-time withstand current (1s)		300 A	396 A
Protection		IP20	NEMA 1

Mounting instructions

Rail		TH 35-7.5, TH 35-15
Wire stripping length		11 mm 0.433 in
Tool (for flexible conductor without ferrule)		Flat screwdriver Ø 3.5 mm Ø 0.138 in

The connecting capacity data for one Rigid - Solid / Stranded - Flexible conductor (when applicable) is a mandatory information required by IEC, UL and CSA standards (Copper conductors).All other data are provided as supplementary information only. For more details, please consult our CB, UL or CSA certificates and technical datasheet available on http://www.TE.com

CE CB RoHS USR CNR CSA EAC BV

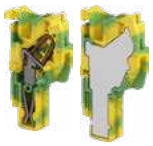

CDK2.5-PE CDK2.5-PE-E

Available in Q3.2019

Female plugs

Description		Color	Type	Part Number		Pkg qty	Weight (1 pce) g
Female plugs	1 pole	Green-yellow	CDK2.5-PE	1SNK805750R0000		50	2.80
Female plugs without outer nubs - Closed	1 pole		CDK2.5-PE-E	1SNK805753R0000		50	2.88

15 poles max.

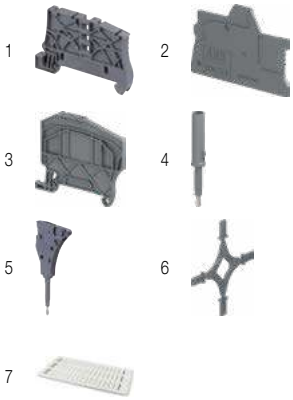

Accessories

	Description			Color	Type	Part Number		Pkg qty	Weight (1 pce) g
1	End stops	5.2 mm	0.205 in	Dark grey	BAZ1	1SNK900002R0000		50	5.30
2	End sections	1.5 mm	0.059 in	Dark grey	EDK2.5-11	1SNK805915R0000		20	1.49
3	Circuit separators	3 mm	0.118 in	Dark grey	CS-R2	1SNK900106R0000		20	3.80
4	Test adapters	For test plugs DIA 2 mm 0.079 in		Dark grey	TP2	1SNK900203R0000		20	1.70
		For test plugs DIA 4 mm 0.157 in			TP4	1SNK900205R0000		20	2.40
5	Test connectors	5.2 mm 0.205 in spacing		Dark grey	TC5	1SNK900200R0000		10	5.20
		End module, 5.2 mm 0.205 in			TC5-R1	1SNK900201R0000		10	5.20
6	Coding pegs			Dark grey	COP-ZD	1SNK900636R0000		10	3.57
7	Terminal block markers	Blank card		White	MC512	1SNK140000R0000		22	9.00
					MC512PA	1SNK149999R0000		20	10.00
		Blank marker			MG-CPM 13 41790	1SNB041790R0512		1960	0.236
		Universal wire markers holder		Grey	UMH	1SNK900611R0000		10	0.20

Complete list of accessories is indicated in the terminal block datasheet including end stops.
Some accessories such as jumper bars may modify the terminal block's ratings: Complete information available in the accessories section of the catalog.

Technical data valid for copper conductors only.

1SNK164024S0201

4

ZDK2.5-22-PE PI-Spring pluggable terminal blocks

Feed-through - 5.2 mm 0.205 in spacing

2.5 mm²

12 AWG

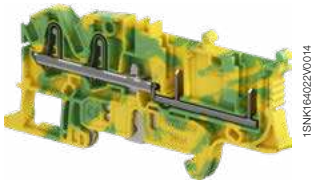

1SNK164022V0014

ZDK2.5-22-PE

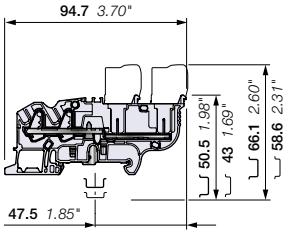

5.2 mm 0.205 in spacing

Description

- Increase your productivity with pluggable terminal blocks: possibility of pre-produced plugs harnesses, time saving plug and play assembly, reduced transportation panels preparation and final installation, easily connect sub-assemblies together,
- Simplify and secure your installation: in site faulty connection errors are eliminated, prior connection testing is eased and reliable, test connectors (TC5) withstanding 10 000 operations are compatible for convenient testing.

Ordering details

Description		Color	Type	Part Number		Pkg qty	Weight (1 pce) g
Ground	4 connections	Green-yellow	ZDK2.5-22-PE	1SNK805152R0000		50	14.05

Main technical data

Connecting capacity		IEC	UL - CSA
1 conductor per clamp	Rigid - Solid / Stranded	0.2 ... 4 mm²	26 ... 12 AWG
	Flexible	0.22 ... 2.5 mm²	
	with non insulated ferrule	0.22 ... 2.5 mm²	26 ... 14 AWG
	with insulated ferrule	0.22 ... 2.5 mm²	26 ... 14 AWG
Rated cross section		2.5 mm²	12 AWG
Rated short-time withstand current (1s)		300 A	396 A
Protection		IP20	NEMA 1

Mounting instructions

Rail		TH 35-7.5, TH 35-15
Wire stripping length		11 mm 0.433 in
Tool (for flexible conductor without ferrule)		Flat screwdriver Ø 3.5 mm Ø 0.138 in

The connecting capacity data for one Rigid - Solid / Stranded - Flexible conductor (when applicable) is a mandatory information required by IEC, UL and CSA standards (Copper conductors).All other data are provided as supplementary information only. For more details, please consult our CB, UL or CSA certificates and technical datasheet available on http://www.TE.com

CE CB RoHS USR CNR CSA EAC BV

4

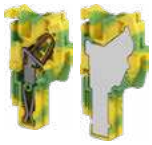

CDK2.5-PE CDK2.5-PE-E

Available in Q3.2019

Female plugs

Description		Color	Type	Part Number		Pkg qty	Weight (1 pce) g
Female plugs	1 pole	Green-yellow	CDK2.5-PE	1SNK805750R0000		50	2.80
Female plugs without outer nubs - Closed	1 pole		CDK2.5-PE-E	1SNK805753R0000		50	2.88

15 poles max.

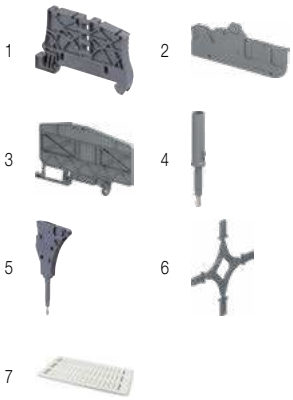

Accessories

	Description			Color	Type	Part Number		Pkg qty	Weight (1 pce) g
1	End stops	5.2 mm	0.205 in	Dark grey	BAZ1	1SNK900002R0000		50	5.30
2	End sections	2.2 mm	0.087 in	Dark grey	EDK2.5-22	1SNK805910R0000		20	3.15
3	Circuit separators	3 mm	0.118 in	Dark grey	CS-R3	1SNK900107R0000		20	6.40
4	Test adapters	For test plugs DIA 2 mm 0.079 in		Dark grey	TP2	1SNK900203R0000		20	1.70
		For test plugs DIA 4 mm 0.157 in			TP4	1SNK900205R0000		20	2.40
5	Test connectors	5.2 mm 0.205 in spacing		Dark grey	TC5	1SNK900200R0000		10	5.20
		End module, 5.2 mm 0.205 in			TC5-R1	1SNK900201R0000		10	5.20
6	Coding pegs			Dark grey	COP-ZD	1SNK900636R0000		10	3.57
7	Terminal block markers	Blank card		White	MC512	1SNK140000R0000		22	9.00
					MC512PA	1SNK149999R0000		20	10.00
		Blank marker			MG-CPM 13 41790	1SNB041790R0512		1960	0.236
		Universal wire markers holder		Grey	UMH	1SNK900611R0000		10	0.20

Complete list of accessories is indicated in the terminal block datasheet including end stops.
Some accessories such as jumper bars may modify the terminal block's ratings: Complete information available in the accessories section of the catalog.

1SNK164026S0201

Technical data valid for copper conductors only.

ZDK2.5-D2 PI-Spring pluggable terminal blocks

Double deck feed-through 2 circuits - 5.2 mm 0.205 in spacing

2.5 mm²

12 AWG

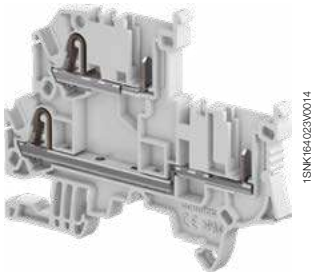

ZDK2.5-D2

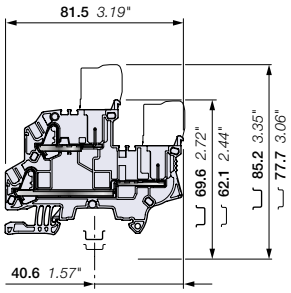

5.2 mm 0.205 in spacing

CDK2.5 CDK2.5-E CDK2.5-BL CDK2.5-BL-E

Description

- Increase your productivity with pluggable terminal blocks: possibility of pre-produced plugs harnesses, time saving plug and play assembly, reduced transportation panels preparation and final installation, easily connect sub-assemblies together,
- Simplify and secure your installation: in site faulty connection errors are eliminated, prior connection testing is eased and reliable, test connectors (TC5) withstanding 10 000 operations are compatible for convenient testing.

Ordering details

Description		Color	Type	Part Number		Pkg qty	Weight (1 pce) g
Feed-through	double deck 4 connections	Grey	ZDK2.5-D2	1SNK805213R0000		50	11.89
		Blue	ZDK2.5-D2-BL	1SNK805223R0000		50	11.89

Main technical data

Connecting capacity		IEC	UL - CSA
1 conductor per clamp	Rigid - Solid / Stranded	0.2 ... 4 mm²	26 ... 12 AWG
	Flexible	0.22 ... 2.5 mm²	
	with non insulated ferrule	0.22 ... 2.5 mm²	26 ... 14 AWG
	with insulated ferrule	0.22 ... 2.5 mm²	26 ... 14 AWG
2 conductors per clamp	Flexible with twin ferrule	0.22 ... 0.5 mm²	26 ... 20 AWG
Rated current / Rated cross section		22 A / 2.5 mm²	20 A / 12 AWG
Rated short-time withstand current (1s)		300 A	
Rated voltage		800 V	600 V
Impulse withstand voltage		8000 V	
Protection		IP20	NEMA 1

Mounting instructions

Rail	TH 35-7.5, TH 35-15
Wire stripping length	11 mm 0.433 in
Tool (for flexible conductor without ferrule)	Flat screwdriver Ø 3.5 mm Ø 0.138 in

The connecting capacity data for one Rigid - Solid / Stranded - Flexible conductor (when applicable) is a mandatory information required by IEC, UL and CSA standards (Copper conductors).All other data are provided as supplementary information only. For more details, please consult our CB, UL or CSA certificates and technical datasheet available on http://www.TE.com

CE CB RoHS USR CNR CSA EAC BV

Female plugs

Description		Color	Type	Part Number		Pkg qty	Weight (1 pce) g
Female plugs	1 pole	Grey	CDK2.5	1SNK805712R0000		50	2.80
Female plugs without outer nubs - Closed	1 pole		CDK2.5-E	1SNK805713R0000		50	2.88
Female plugs	1 pole	Blue	CDK2.5-BL	1SNK805742R0000		50	2.80
Female plugs without outer nubs - Closed	1 pole		CDK2.5-BL-E	1SNK805743R0000		50	2.88

15 poles max.

Accessories

	Description			Color	Type	Part Number		Pkg qty	Weight (1 pce) g
1	End stops	5.2 mm	0.205 in	Dark grey	BAZ1	1SNK900002R0000		50	5.30
2	End sections	2.0 mm	0.079 in	Dark grey	EDK2.5-D	1SNK805913R0000		20	3.88
3	Jumper bars	2 poles	32 A (IEC)	Orange	JB5-2	1SNK905302R0000		50	1.30
		3 poles	32 A (IEC)		JB5-3	1SNK905303R0000		50	2.00
		4 poles	32 A (IEC)		JB5-4	1SNK905304R0000		50	2.70
		5 poles	32 A (IEC)		JB5-5	1SNK905305R0000		50	3.50
		10 poles	32 A (IEC)		JB5-10	1SNK905310R0000		30	7.10
		50 poles	32 A (IEC)		JB5-50	1SNK905350R0000		10	36.00
4	Cross spacing jumpers	3 poles	32 A (IEC)	Orange	JB85-3	1SNK900603R0000		10	2.80
5	Test adapters	For test plugs DIA 2 mm 0.079 in		Dark grey	TP2	1SNK900203R0000		20	1.70
		For test plugs DIA 4 mm 0.157 in			TP4	1SNK900205R0000		20	2.40
6	Test connectors	5.2 mm 0.205 in spacing		Dark grey	TC5	1SNK900200R0000		10	5.20
		End module, 5.2 mm 0.205 in			TC5-R1	1SNK900201R0000		10	5.20
7	Coding pegs			Dark grey	COP-ZD	1SNK900636R0000		10	3.57
8	Terminal block markers	Blank card		White	MC512	1SNK140000R0000		22	9.00
					MC512PA	1SNK149999R0000		20	10.00
		Blank marker			MG-CPM 13 41790	1SNB041790R0512		1960	0.236
		Universal wire markers holder		Grey	UMH	1SNK900611R0000		10	0.20

Complete list of accessories is indicated in the terminal block datasheet including end stops.
Some accessories such as jumper bars may modify the terminal block's ratings: Complete information available in the accessories section of the catalog.

Technical data valid for copper conductors only.

1SNK164029S0201

ZDK2.5-D1 PI-Spring pluggable terminal blocks

Double deck feed-through 1 circuit - 5.2 mm 0.205 in spacing

2.5 mm²

12 AWG

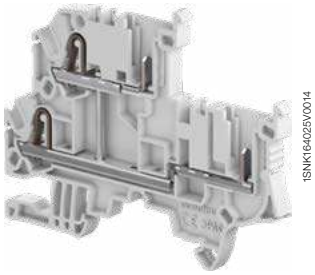

1SNK164025V0014

ZDK2.5-D1

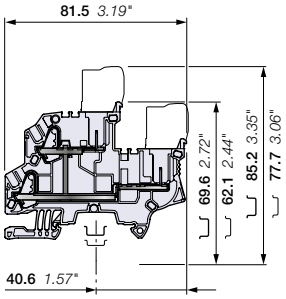

5.2 mm 0.205 in spacing

Description

- Increase your productivity with pluggable terminal blocks: possibility of pre-produced plugs harnesses, time saving plug and play assembly, reduced transportation panels preparation and final installation, easily connect sub-assemblies together,
- Simplify and secure your installation: in site faulty connection errors are eliminated, prior connection testing is eased and reliable, test connectors (TC5) withstanding 10 000 operations are compatible for convenient testing.

Ordering details

Description		Color	Type	Part Number		Pkg qty	Weight (1 pce) g
Feed-through	double deck 4 connections	Grey	ZDK2.5-D1	1SNK805214R0000		50	12.46

Main technical data

Connecting capacity		IEC	UL - CSA
1 conductor per clamp	Rigid - Solid / Stranded	0.2 ... 4 mm²	26 ... 12 AWG
	Flexible	0.22 ... 2.5 mm²	
	with non insulated ferrule	0.22 ... 2.5 mm²	26 ... 14 AWG
	with insulated ferrule	0.22 ... 2.5 mm²	26 ... 14 AWG
2 conductors per clamp	Flexible with twin ferrule	0.22 ... 0.5 mm²	26 ... 20 AWG
Rated current / Rated cross section		22 A / 2.5 mm²	20 A / 12 AWG
Rated short-time withstand current (1s)		300 A	
Rated voltage		800 V	600 V
Impulse withstand voltage		8000 V	
Protection		IP20	NEMA 1

Mounting instructions

Rail		TH 35-7.5, TH 35-15
Wire stripping length		11 mm 0.433 in
Tool (for flexible conductor without ferrule)		Flat screwdriver Ø 3.5 mm Ø 0.138 in

The connecting capacity data for one Rigid - Solid / Stranded - Flexible conductor (when applicable) is a mandatory information required by IEC, UL and CSA standards (Copper conductors).All other data are provided as supplementary information only. For more details, please consult our CB, UL or CSA certificates and technical datasheet available on http://www.TE.com

CE CB RoHS USR CNR CSA EAC BV

4

CDK2.5 CDK2.5-E

Female plugs

Description		Color	Type	Part Number		Pkg qty	Weight (1 pce) g
Female plugs	1 pole	Grey	CDK2.5	1SNK805712R0000		50	2.80
Female plugs without outer nubs - Closed	1 pole		CDK2.5-E	1SNK805713R0000		50	2.88

15 poles max.

Accessories

	Description			Color	Type	Part Number		Pkg qty	Weight (1 pce) g
1	End stops	5.2 mm	0.205 in	Dark grey	BAZ1	1SNK900002R0000		50	5.30
2	End sections	2.0 mm	0.079 in	Dark grey	EDK2.5-D	1SNK805913R0000		20	3.88
3	Jumper bars	2 poles	32 A (IEC)	Orange	JB5-2	1SNK905302R0000		50	1.30
		3 poles	32 A (IEC)		JB5-3	1SNK905303R0000		50	2.00
		4 poles	32 A (IEC)		JB5-4	1SNK905304R0000		50	2.70
		5 poles	32 A (IEC)		JB5-5	1SNK905305R0000		50	3.50
		10 poles	32 A (IEC)		JB5-10	1SNK905310R0000		30	7.10
		50 poles	32 A (IEC)		JB5-50	1SNK905350R0000		10	36.00
4	Cross spacing jumpers	3 poles	32 A (IEC)	Orange	JB85-3	1SNK900603R0000		10	2.80
5	Test adapters	For test plugs DIA 2 mm 0.079 in		Dark grey	TP2	1SNK900203R0000		20	1.70
		For test plugs DIA 4 mm 0.157 in			TP4	1SNK900205R0000		20	2.40
6	Test connectors	5.2 mm 0.205 in spacing		Dark grey	TC5	1SNK900200R0000		10	5.20
		End module, 5.2 mm 0.205 in			TC5-R1	1SNK900201R0000		10	5.20
7	Coding pegs			Dark grey	COP-ZD	1SNK900636R0000		10	3.57
8	Terminal block markers	Blank card		White	MC512	1SNK140000R0000		22	9.00
					MC512PA	1SNK149999R0000		20	10.00
		Blank marker			MG-CPM 13 41790	1SNB041790R0512		1960	0.236
		Universal wire markers holder		Grey	UMH	1SNK900611R0000		10	0.20

Complete list of accessories is indicated in the terminal block datasheet including end stops.
Some accessories such as jumper bars may modify the terminal block's ratings: Complete information available in the accessories section of the catalog.

1SNK164027S0201

Technical data valid for copper conductors only.

ZDK2.5-D2-PE PI-Spring pluggable terminal blocks

Double deck feed-through + ground - 5.2 mm 0.205 in spacing

2.5 mm²

12 AWG

1SNK164027V0014

ZDK2.5-D2-PE

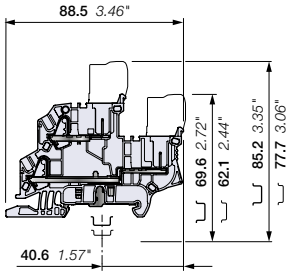

5.2 mm 0.205 in spacing

Available in Q3.2019

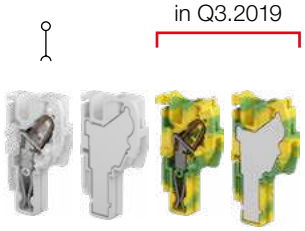

CDK2.5 CDK2.5-E CDK2.5-PE CDK2.5-PE-E

Description

- Increase your productivity with pluggable terminal blocks: possibility of pre-produced plugs harnesses, time saving plug and play assembly, reduced transportation panels preparation and final installation, easily connect sub-assemblies together,
- Simplify and secure your installation: in site faulty connection errors are eliminated, prior connection testing is eased and reliable, test connectors (TC5) withstanding 10 000 operations are compatible for convenient testing.

Ordering details

Description		Color	Type	Part Number		Pkg qty	Weight (1 pce) g
Feed-through + ground	double deck 4 connections	Grey, Green-yellow	ZDK2.5-D2-PE	1SNK805212R0000		50	16.13

Main technical data

Connecting capacity		IEC	UL - CSA
1 conductor per clamp	Rigid - Solid / Stranded	0.2 ... 4 mm²	26 ... 12 AWG
	Flexible	0.22 ... 2.5 mm²	
	with non insulated ferrule	0.22 ... 2.5 mm²	26 ... 14 AWG
	with insulated ferrule	0.22 ... 2.5 mm²	26 ... 14 AWG
2 conductors per clamp	Flexible with twin ferrule	0.22 ... 0.5 mm²	26 ... 20 AWG
Rated current / Rated cross section		22 A / 2.5 mm²	20 A / 12 AWG
Rated short-time withstand current (1s)		300 A	396 A
Rated voltage		800 V	600 V
Impulse withstand voltage		8000 V	
Protection		IP20	NEMA 1

Mounting instructions

Rail		TH 35-7.5, TH 35-15
Wire stripping length		11 mm 0.433 in
Tool (for flexible conductor without ferrule)		Flat screwdriver Ø 3.5 mm Ø 0.138 in

The connecting capacity data for one Rigid - Solid / Stranded - Flexible conductor (when applicable) is a mandatory information required by IEC, UL and CSA standards (Copper conductors).All other data are provided as supplementary information only. For more details, please consult our CB, UL or CSA certificates and technical datasheet available on http://www.TE.com

CE CB RoHS USR CNR CSA EAC BV

Female plugs

Description		Color	Type	Part Number		Pkg qty	Weight (1 pce) g
Female plugs	1 pole	Grey	CDK2.5	1SNK805712R0000		50	2.80
Female plugs without outer nubs - Closed	1 pole		CDK2.5-E	1SNK805713R0000		50	2.88
Female plugs	1 pole	Green-yellow	CDK2.5-PE	1SNK805750R0000		50	2.80
Female plugs without outer nubs - Closed	1 pole		CDK2.5-PE-E	1SNK805753R0000		50	2.88

15 poles max.

Accessories

	Description			Color	Type	Part Number		Pkg qty	Weight (1 pce) g
1	End stops	5.2 mm	0.205 in	Dark grey	BAZ1	1SNK900002R0000		50	5.30
2	End sections	2.0 mm	0.079 in	Dark grey	EDK2.5-D	1SNK805913R0000		20	3.88
3	Jumper bars	2 poles	32 A (IEC)	Orange	JB5-2	1SNK905302R0000		50	1.30
		3 poles	32 A (IEC)		JB5-3	1SNK905303R0000		50	2.00
		4 poles	32 A (IEC)		JB5-4	1SNK905304R0000		50	2.70
		5 poles	32 A (IEC)		JB5-5	1SNK905305R0000		50	3.50
		10 poles	32 A (IEC)		JB5-10	1SNK905310R0000		30	7.10
		50 poles	32 A (IEC)		JB5-50	1SNK905350R0000		10	36.00
4	Cross spacing jumpers	3 poles	32 A (IEC)	Orange	JB85-3	1SNK900603R0000		10	2.80
5	Test adapters	For test plugs DIA 2 mm 0.079 in		Dark grey	TP2	1SNK900203R0000		20	1.70
		For test plugs DIA 4 mm 0.157 in			TP4	1SNK900205R0000		20	2.40
6	Test connectors	5.2 mm 0.205 in spacing		Dark grey	TC5	1SNK900200R0000		10	5.20
		End module, 5.2 mm 0.205 in			TC5-R1	1SNK900201R0000		10	5.20
7	Coding pegs			Dark grey	COP-ZD	1SNK900636R0000		10	3.57
8	Terminal block markers	Blank card		White	MC512	1SNK140000R0000		22	9.00
					MC512PA	1SNK149999R0000		20	10.00
		Blank marker			MG-CPM 13 41790	1SNB041790R0512		1960	0.236
		Universal wire markers holder		Grey	UMH	1SNK900611R0000		10	0.20

Complete list of accessories is indicated in the terminal block datasheet including end stops.
Some accessories such as jumper bars may modify the terminal block's ratings: Complete information available in the accessories section of the catalog.

Technical data valid for copper conductors only.

1SNK164030S0201

4

ZDK2.5-D1-PE PI-Spring pluggable terminal blocks

Double deck ground - 5.2 mm 0.205 in spacing

2.5 mm²

12 AWG

ZDK2.5-D1-PE

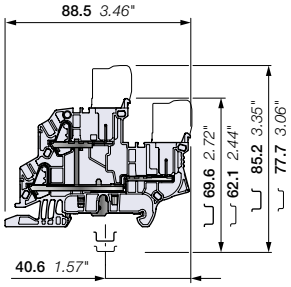

5.2 mm 0.205 in spacing

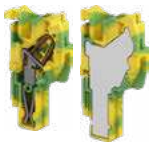

CDK2.5-PE CDK2.5-PE-E

Available in Q3.2019

Description

- Increase your productivity with pluggable terminal blocks: possibility of pre-produced plugs harnesses, time saving plug and play assembly, reduced transportation panels preparation and final installation, easily connect sub-assemblies together,
- Simplify and secure your installation: in site faulty connection errors are eliminated, prior connection testing is eased and reliable, test connectors (TC5) withstanding 10 000 operations are compatible for convenient testing.

Ordering details

Description		Color	Type	Part Number		Pkg qty	Weight (1 pce) g
Ground	double deck 4 connections	Green-yellow	ZDK2.5-D1-PE	1SNK805250R0000		50	16.80

Main technical data

Connecting capacity		IEC	UL - CSA
1 conductor per clamp	Rigid - Solid / Stranded	0.2 ... 4 mm²	26 ... 12 AWG
	Flexible	0.22 ... 2.5 mm²	
	with non insulated ferrule	0.22 ... 2.5 mm²	26 ... 14 AWG
	with insulated ferrule	0.22 ... 2.5 mm²	26 ... 14 AWG
Rated cross section		2.5 mm²	12 AWG
Rated short-time withstand current (1s)		300 A	396 A
Protection		IP20	NEMA 1

Mounting instructions

Rail		TH 35-7.5, TH 35-15
Wire stripping length		11 mm 0.433 in
Tool (for flexible conductor without ferrule)		Flat screwdriver Ø 3.5 mm Ø 0.138 in

The connecting capacity data for one Rigid - Solid / Stranded - Flexible conductor (when applicable) is a mandatory information required by IEC, UL and CSA standards (Copper conductors).All other data are provided as supplementary information only. For more details, please consult our CB, UL or CSA certificates and technical datasheet available on http://www.TE.com

CE CB RoHS USR CNR CSA EAC BV

Female plugs

Description		Color	Type	Part Number		Pkg qty	Weight (1 pce) g
Female plugs	1 pole	Green-yellow	CDK2.5-PE	1SNK805750R0000		50	2.80
Female plugs without outer nubs - Closed	1 pole		CDK2.5-PE-E	1SNK805753R0000		50	2.88

15 poles max.

Accessories

	Description			Color	Type	Part Number		Pkg qty	Weight (1 pce) g
1	End stops	5.2 mm	0.205 in	Dark grey	BAZ1	1SNK900002R0000		50	5.30
2	End sections	2.0 mm	0.079 in	Dark grey	EDK2.5-D	1SNK805913R0000		20	3.88
3	Test adapters	For test plugs DIA 2 mm 0.079 in		Dark grey	TP2	1SNK900203R0000		20	1.70
		For test plugs DIA 4 mm 0.157 in			TP4	1SNK900205R0000		20	2.40
4	Test connectors	5.2 mm 0.205 in spacing		Dark grey	TC5	1SNK900200R0000		10	5.20
		End module, 5.2 mm 0.205 in			TC5-R1	1SNK900201R0000		10	5.20
5	Coding pegs			Dark grey	COP-ZD	1SNK900636R0000		10	3.57
6	Terminal block markers	Blank card		White	MC512	1SNK140000R0000		22	9.00
					MC512PA	1SNK149999R0000		20	10.00
		Universal wire markers holder		Grey	UMH	1SNK900611R0000		10	0.20

Complete list of accessories is indicated in the terminal block datasheet including end stops.
Some accessories such as jumper bars may modify the terminal block's ratings: Complete information available in the accessories section of the catalog.

Technical data valid for copper conductors only.

1SNK164028S0201

CDK2.5 PI-Spring female plugs

Female plug - 5.2 mm 0.205 in spacing

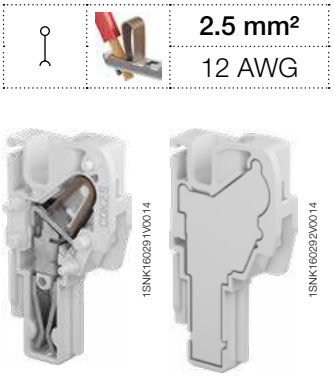

CDK2.5 CDK2.5-E

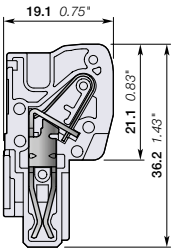

5.2 mm 0.205 in spacing

	2.5 mm²
	12 AWG

Description

- Create your own female plug assemblies without any special tools, easily snap together multiple plugs for optimal ergonomics and quick assembly,
- Increase your flexibility: eliminate stock of pre-configured female plugs, easily add an extra plug in case of needed modification,
- Reduce your stock of unitary plugs up to 30%: only two plug variants are required to compose your own subsets of plugs from 2 to 15 poles.

Ordering details

Description	Color	Type	Part number		Pkg qty	Weight (1 pce) g
Female plugs	Grey	CDK2.5	1SNK805712R0000		50	2.80
	Blue	CDK2.5-BL	1SNK805742R0000		50	2.80
Available in Q3.2019	Green-Yellow	CDK2.5-PE	1SNK805750R0000		50	2.80
Female plugs without outer nubs - Closed	Grey	CDK2.5-E	1SNK805713R0000		50	2.80
	Blue	CDK2.5-BL-E	1SNK805743R0000		50	2.80
Available in Q3.2019	Green-Yellow	CDK2.5-PE-E	1SNK805753R0000		50	2.80

Main technical data

Connecting capacity		IEC	UL - CSA
1 conductor per clamp	Rigid - Solid / Stranded	0.2 ... 4 mm²	26 ... 12 AWG
	Flexible	0.22 ... 2.5 mm²	
	with non insulated ferrule	0.22 ... 2.5 mm²	26 ... 14 AWG
	with insulated ferrule	0.22 ... 2.5 mm²	26 ... 14 AWG
2 conductors per clamp	Flexible with twin ferrule	0.22 ... 0.5 mm²	26 ... 20 AWG
Rated current / Rated cross section		24 A / 2.5 mm²	22 A / 12 AWG
Rated short-time withstand current (1s)		300 A	
Rated voltage		1000 V	600 V
Impulse withstand voltage		8000 V	
Protection		IP20	NEMA 1

Mounting instructions

Rail		
Wire stripping length		11 mm 0.433 in
Tool (for flexible conductor without ferrule)		Flat screwdriver Ø 3.5 mm Ø 0.138 in

The connecting capacity data for one Rigid - Solid / Stranded - Flexible conductor (when applicable) is a mandatory information required by IEC, UL and CSA standards (Copper conductors). All other data are provided as supplementary information only. For more details, please consult our CB, UL or CSA certificates and technical datasheet available on http://www.TE.com

CE CB RoHS USR CNR CSA EAC BV

Mounting instructions

15 poles max.

Accessories

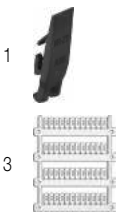

	Description		Color	Type	Part number		Pkg qty	Weight (1 pce) g
1	**Locking devices**	9.4 mm 0.370 in spacing	Black	VR-ZD	1SNK900637R0000		50	0.7
2	**Cable clamp**	9.4 mm 0.370 in spacing	Dark grey	PT-ZD	1SNK900660R0000		50	1.04
3	**Terminal block markers**	Blank marker	White	MG-CPM 13 41790	1SNB041790R0512		1960	0.23
		Blank strip label		MG-CPMFA 43196	1SNB043196R0012		350	2.56
		Blank card		MC512	1SNK140000R0000		22	9.00
				MC512PA	1SNK149999R0000		20	10.00
		Universal wire markers holder	Grey	UMH	1SNK900611R0000		10	0.20

Complete list of accessories is indicated in the terminal block datasheet including end stops.
Some accessories such as jumper bars may modify the terminal block's ratings: Complete information available in the accessories section of the catalog.

1SNK164005S0201

Technical data valid for copper conductors only.

CDK2.5-J PI-Spring female plugs

Female plug - 5.2 mm 0.205 in spacing

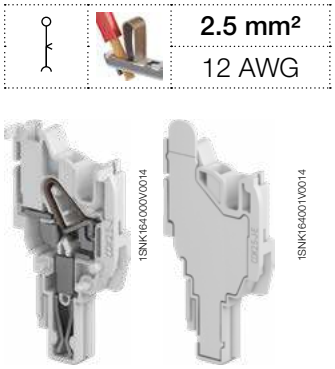

CDK2.5-J CDK2.5-J-E

Description

- Create your own female plug assemblies without any special tools, easily snap together multiple plugs for optimal ergonomics and quick assembly,
- Increase your flexibility: eliminate stock of pre-configured female plugs, easily add an extra plug in case of needed modification,
- Reduce your stock of unitary plugs up to 30%: only two plug variants are required to compose your own subsets of plugs from 2 to 15 poles.

Description	Color	Type	Part Number	Pkg qty	Weight (1 pce) g
Female plugs	Grey	CDK2.5-J	1SNK805738R0000	50	4.08
	Blue	CDK2.5-J-BL	1SNK805744R0000	50	4.08
	Green-yellow	CDK2.5-J-PE	1SNK805748R0000	50	4.08
Female plugs without outer nubs - Closed	Grey	CDK2.5-J-E	1SNK805739R0000	50	4.34
	Blue	CDK2.5-J-BL-E	1SNK805745R0000	50	4.34
	Green-yellow	CDK2.5-J-PE-E	1SNK805749R0000	50	4.34

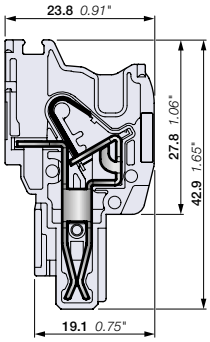

5.2 mm 0.205 in spacing

Main technical data

Connecting capacity		IEC	UL - CSA
1 conductor per clamp	Rigid - Solid / Stranded	0.2 ... 4 mm²	26 ... 12 AWG
	Flexible	0.22 ... 2.5 mm²	
	with non insulated ferrule	0.22 ... 2.5 mm²	26 ... 14 AWG
	with insulated ferrule	0.22 ... 2.5 mm²	26 ... 14 AWG
2 conductors per clamp	Flexible with twin ferrule	0.22 ... 0.5 mm²	26 ... 20 AWG
Rated current / Rated cross section		24 A / 2.5 mm²	20 A / 12 AWG
Rated short-time withstand current (1s)		300 A	
Rated voltage		800 V	600 V
Impulse withstand voltage		8000 V	
Protection		IP20	NEMA 1

Mounting instructions

Rail		
Wire stripping length		11 mm 0.433 in
Tool (for flexible conductor without ferrule)		Flat screwdriver Ø 3.5 mm Ø 0.138 in

The connecting capacity data for one Rigid - Solid / Stranded - Flexible conductor (when applicable) is a mandatory information required by IEC, UL and CSA standards (Copper conductors).All other data are provided as supplementary information only. For more details, please consult our CB, UL or CSA certificates and technical datasheet available on http://www.TE.com

CE CB RoHS USR CNR CSA EAC BV

Mounting instructions

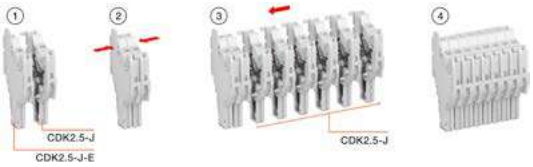

15 poles max.

Accessories

	Description			Color	Type	Part Number	Pkg qty	Weight (1 pce) g
1	Jumper bars	2 poles	32 A (IEC)	Orange	JB5-2	1SNK905302R0000	50	1.30
		3 poles	32 A (IEC)		JB5-3	1SNK905303R0000	50	2.00
		4 poles	32 A (IEC)		JB5-4	1SNK905304R0000	50	2.70
		5 poles	32 A (IEC)		JB5-5	1SNK905305R0000	50	3.50
		10 poles	32 A (IEC)		JB5-10	1SNK905310R0000	30	7.10
		50 poles	32 A (IEC)		JB5-50	1SNK905350R0000	10	36.00
2	Test adapters	For test plugs DIA 2 mm 0.079 in		Dark grey	TP2	1SNK900203R0000	20	1.70
		For test plugs DIA 4 mm 0.157 in			TP4	1SNK900205R0000	20	2.40
3	Test connectors	5.2 mm 0.205 in spacing		Dark grey	TC5	1SNK900200R0000	10	5.20
		End module, 5.2 mm 0.205 in			TC5-R1	1SNK900201R0000	10	5.20
4	Locking devices	9.4 mm 0.370 in spacing		Black	VR-ZD	1SNK900637R0000	50	0.7
5	Strain Relief			Dark grey	PT-ZD	1SNK900660R0000	50	1.04
6	Terminal block markers	Blank card		White	MC512	1SNK140000R0000	22	9.00
					MC512PA	1SNK149999R0000	20	10.00
		Blank strip label			MG-CPMFA 43196	1SNB043196R0012	400	2.562
		Blank marker			MG-CPM 13 41790	1SNB041790R0512	1960	0.236
		Universal wire markers holder		Grey	UMH	1SNK900611R0000	10	0.20

Complete list of accessories is indicated in the terminal block datasheet including end stops.
Some accessories such as jumper bars may modify the terminal block's ratings: Complete information available in the accessories section of the catalog.

Technical data valid for copper conductors only.

1SNK164031S0201

CDK2.5-2P-J PI-Spring female plugs

Female plug - 5.2 mm 0.205 in spacing

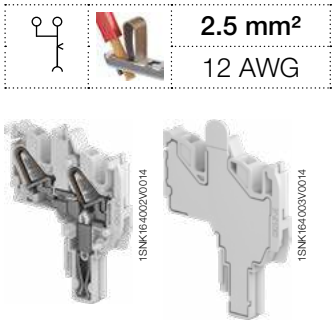

CDK2.5-2P-J CDK2.5-2P-J-E

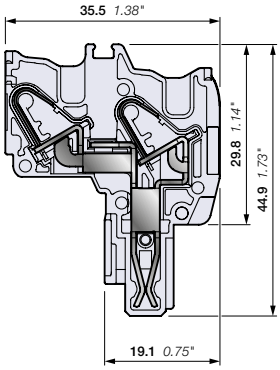

5.2 mm 0.205 in spacing

Description

- Create your own female plug assemblies without any special tools, easily snap together multiple plugs for optimal ergonomics and quick assembly,
- Increase your flexibility: eliminate stock of pre-configured female plugs, easily add an extra plug in case of needed modification,
- Reduce your stock of unitary plugs up to 30%: only two plug variants are required to compose your own subsets of plugs from 2 to 15 poles.

Description	Color	Type	Part Number	Pkg qty	Weight (1 pce) g
Female plugs	Grey	CDK2.5-2P-J	1SNK805740R0000	50	5.37
	Blue	CDK2.5-2P-J-BL	1SNK805746R0000	50	5.37
	Green-yellow	CDK2.5-2P-J-PE	1SNK805751R0000	50	5.37
Female plugs without outer nubs - Closed	Grey	CDK2.5-2P-J-E	1SNK805741R0000	50	5.74
	Blue	CDK2.5-2P-J-BL-E	1SNK805747R0000	50	5.74
	Green-yellow	CDK2.5-2P-J-PE-E	1SNK805752R0000	50	5.74

Main technical data

Connecting capacity		IEC	UL - CSA
1 conductor per clamp	Rigid - Solid / Stranded	0.2 ... 4 mm²	26 ... 12 AWG
	Flexible	0.22 ... 2.5 mm²	
	with non insulated ferrule	0.22 ... 2.5 mm²	26 ... 14 AWG
	with insulated ferrule	0.22 ... 2.5 mm²	26 ... 14 AWG
2 conductors per clamp	Flexible with twin ferrule	0.22 ... 0.5 mm²	26 ... 20 AWG
Rated current / Rated cross section		24 A / 2.5 mm²	20 A / 12 AWG
Rated short-time withstand current (1s)		300 A	
Rated voltage		500 V	600 V
Impulse withstand voltage		6000 V	
Protection		IP20	NEMA 1

Mounting instructions

Rail		
Wire stripping length		11 mm 0.433 in
Tool (for flexible conductor without ferrule)		Flat screwdriver Ø 3.5 mm Ø 0.138 in

The connecting capacity data for one Rigid - Solid / Stranded - Flexible conductor (when applicable) is a mandatory information required by IEC, UL and CSA standards (Copper conductors).All other data are provided as supplementary information only. For more details, please consult our CB, UL or CSA certificates and technical datasheet available on http://www.TE.com

CE CB RoHS USR CNR CSA EAC BV

Mounting instructions

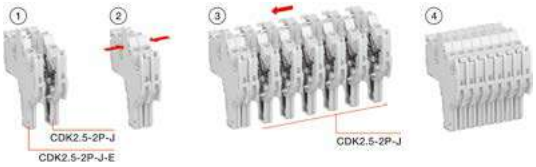

15 poles max.

Accessories

	Description			Color	Type	Part Number	Pkg qty	Weight (1 pce) g
1	Jumper bars	2 poles	32 A (IEC)	Orange	JB5-2	1SNK905302R0000	50	1.30
		3 poles	32 A (IEC)		JB5-3	1SNK905303R0000	50	2.00
		4 poles	32 A (IEC)		JB5-4	1SNK905304R0000	50	2.70
		5 poles	32 A (IEC)		JB5-5	1SNK905305R0000	50	3.50
		10 poles	32 A (IEC)		JB5-10	1SNK905310R0000	30	7.10
		50 poles	32 A (IEC)		JB5-50	1SNK905350R0000	10	36.00
2	Test adapters	For test plugs DIA 2 mm 0.079 in		Dark grey	TP2	1SNK900203R0000	20	1.70
		For test plugs DIA 4 mm 0.157 in			TP4	1SNK900205R0000	20	2.40
3	Test connectors	5.2 mm 0.205 in spacing		Dark grey	TC5	1SNK900200R0000	10	5.20
		End module, 5.2 mm 0.205 in			TC5-R1	1SNK900201R0000	10	5.20
4	Locking devices	9.4 mm 0.370 in spacing		Black	VR-ZD	1SNK900637R0000	50	0.7
5	Strain Relief			Dark grey	PT-ZD	1SNK900660R0000	50	1.04
6	Terminal block markers	Blank card		White	MC512	1SNK140000R0000	22	9.00
					MC512PA	1SNK149999R0000	20	10.00
		Blank strip label			MG-CPMFA 43196	1SNB043196R0012	400	2.562
		Blank marker			MG-CPM 13 41790	1SNB041790R0512	1960	0.236
		Universal wire markers holder		Grey	UMH	1SNK900611R0000	10	0.20

Complete list of accessories is indicated in the terminal block datasheet including end stops.
Some accessories such as jumper bars may modify the terminal block's ratings: Complete information available in the accessories section of the catalog.

Technical data valid for copper conductors only.

4

1SNK164032S0201

CDK4 PI-Spring female plugs
Female plug - 6 mm 0.236 in spacing

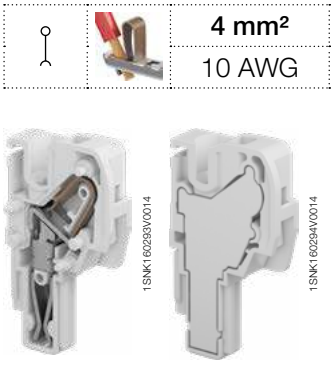

CDK4 CDK4-E

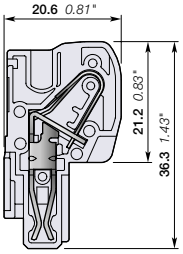

6 mm 0.236 in spacing

4 mm²	
10 AWG	

Description

- Create your own female plug assemblies without any special tools, easily snap together multiple plugs for optimal ergonomics and quick assembly,
- Increase your flexibility: eliminate stock of pre-configured female plugs, easily add an extra plug in case of needed modification,
- Reduce your stock of unitary plugs up to 30%: only two plug variants are required to compose your own subsets of plugs from 2 to 15 poles.

Ordering details

Description	Color	Type	Part Number		Pkg qty	Weight (1 pce) g
Female plugs	Grey	CDK4	1SNK806712R0000		50	3.80
Female plugs without outer nubs - Closed		CDK4-E	1SNK806713R0000		50	4.50

Main technical data

Connecting capacity		IEC	UL - CSA
1 conductor per clamp	Rigid - Solid / Stranded	0.5 ... 6 mm²	26 ... 10 AWG
	Flexible	0.5 ... 4 mm²	
	with non insulated ferrule	0.5 ... 4 mm²	26 ... 12 AWG
	with insulated ferrule	0.5 ... 4 mm²	26 ... 12 AWG
2 conductors per clamp	Flexible with twin ferrule	0.5 ... 1 mm²	26 ... 18 AWG
Rated current / Rated cross section		30 A / 4 mm²	30 A / 10 AWG
Rated short-time withstand current (1s)		480 A	
Rated voltage		1000 V	600 V
Impulse withstand voltage		8000 V	
Protection		IP20	NEMA 1

Mounting instructions

Rail		
Wire stripping length	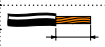	12.5 mm 0.492 in
Tool (for flexible conductor without ferrule)		Flat screwdriver Ø 3.5 mm Ø 0.138 in

The connecting capacity data for one Rigid - Solid / Stranded - Flexible conductor (when applicable) is a mandatory information required by IEC, UL and CSA standards (Copper conductors). All other data are provided as supplementary information only. For more details, please consult our CB, UL or CSA certificates and technical datasheet available on http://www.TE.com

CE CB RoHS USR CNR CSA EAC BV

Mounting instructions

15 poles max.

Accessories

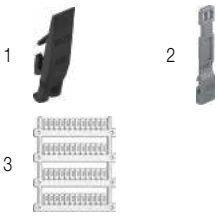

	Description		Color	Type	Part Number		Pkg qty	Weight (1 pce) g
1	Locking devices	9.4 mm 0.370 in spacing	Black	VR-ZD	1SNK900637R0000		50	0.7
2	Cable Clamp	9.4 mm 0.370 in spacing	Dark grey	PT-ZD	1SNK900660R0000		50	1.04
3	Terminal block markers	Blank marker	White	MG-CPM 13 41791	1SNB041791R0612		1680	0.27
		Blank strip label		MG-CPMFA 43196	1SNB043196R0012		350	2.56
		Blank card		MC612	1SNK150000R0000		22	10.00
				MC612PA	1SNK159999R0000		20	11.00
		Universal wire markers holder	Grey	UMH	1SNK900611R0000		10	0.20

Complete list of accessories is indicated in the terminal block datasheet including end stops.
Some accessories such as jumper bars may modify the terminal block's ratings: Complete information available in the accessories section of the catalog.

1SNK164006S0201

Technical data valid for copper conductors only.

Screw clamp Pluggable

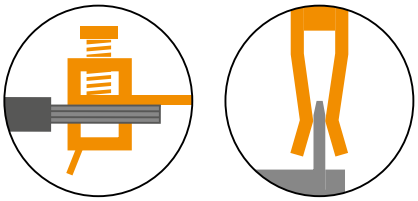

ZDS4-22 Screw clamp pluggable terminal blocks

Feed-through - 5.2 mm 0.205 in spacing

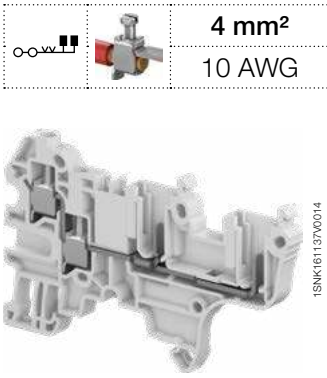

ZDS4-22

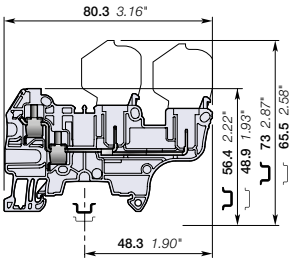

5.2 mm 0.205 in spacing

4 mm²
10 AWG

Description

- Increase your productivity with pluggable terminal blocks: possibility of pre-produced plugs harnesses, time saving plug and play assembly, reduced transportation panels preparation and final installation, easily connect sub-assemblies together,
- Simplify and secure your installation: in site faulty connection errors are eliminated, prior connection testing is eased and reliable, test connectors (TC5) withstanding 10 000 operations are compatible for convenient testing.

Ordering details

Description		Color	Type	Part Number		Pkg qty	Weight (1 pce) g
Feed-through	4 connections	Grey	ZDS4-22	1SNK805013R0000		50	10.80

Main technical data

Connecting capacity		IEC	UL - CSA
1 conductor per clamp	Rigid - Solid / Stranded	0.2 ... 4 mm²	24 ... 10 AWG
	Flexible	0.22 ... 4 mm²	
	with non insulated ferrule	0.22 ... 4 mm²	24 ... 10 AWG
	with insulated ferrule	0.22 ... 2.5 mm²	24 ... 12 AWG
	Gauge	A3-B3	
2 conductors per clamp	Rigid - Solid / Stranded	0.2 ... 1.5 mm²	24 ... 16 AWG
	Flexible	0.22 ... 1.5 mm²	
	with twin ferrule	0.22 ... 1.5 mm²	24 ... 16 AWG
Rated current / Rated cross section		29 A / 4 mm²	28 A / 10 AWG
Rated short-time withstand current (1s)		480 A	
Rated voltage		800 V	300 V
Impulse withstand voltage		8000 V	
Protection		IP20	NEMA 1

Mounting instructions

Rail	TH 35-7.5, TH 35-15
Wire stripping length	10.5 mm 0.413 in
Tool	Flat screwdriver Ø 3.5 mm Ø 0.138 in
Torque	0.6 Nm ± 0.1 5.31 lb.in ± 0.885

The connecting capacity data for one Rigid - Solid / Stranded - Flexible conductor (when applicable) is a mandatory information required by IEC, UL and CSA standards (Copper conductors). All other data are provided as supplementary information only. For more details, please consult our CB, UL or CSA certificates and technical datasheet available on http://www.TE.com

CE | CB | RoHS | USR CNR | CSA | EAC | BV

CDS4 CDS4-E

Female plugs

Description		Color	Type	Part Number		Pkg qty	Weight (1 pce) g
Female plugs	1 pole	Grey	CDS4	1SNK805714R0000		50	3.90
Female plugs without outer nubs - Closed			CDS4-E	1SNK805715R0000		50	4.10

15 poles max.

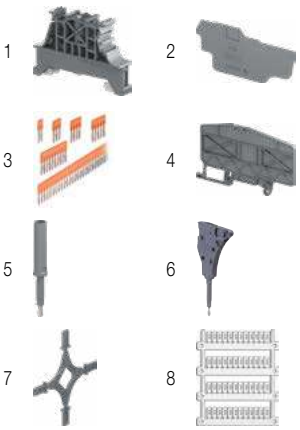

Accessories

	Description			Color	Type	Part Number		Pkg qty	Weight (1 pce) g
1	**End stops**	10 mm	0.394 in	Dark grey	BAM4	1SNK900001R0000		50	14.00
2	**End sections**	0.8 mm	0.031 in	Dark grey	EDS4-22	1SNK805911R0000		20	1.85
3	**Jumper bars**	2 poles	32 A (IEC)	Orange	JB5-2	1SNK905302R0000		50	1.30
		3 poles	32 A (IEC)		JB5-3	1SNK905303R0000		50	2.00
		4 poles	32 A (IEC)		JB5-4	1SNK905304R0000		50	2.70
		5 poles	32 A (IEC)		JB5-5	1SNK905305R0000		50	3.50
		10 poles	32 A (IEC)		JB5-10	1SNK905310R0000		30	7.10
		50 poles	32 A (IEC)		JB5-50	1SNK905350R0000		10	36.00
4	**Circuit separators**	3 mm	0.118 in	Dark grey	CS-R3	1SNK900107R0000		20	6.40
5	**Test adapters**	For test plugs DIA 2 mm 0.079 in		Dark grey	TP2	1SNK900203R0000		20	1.70
		For test plugs DIA 4 mm 0.157 in			TP4	1SNK900205R0000		20	2.40
6	**Test connectors**	5.2 mm 0.205 in spacing		Dark grey	TC5	1SNK900200R0000		10	5.20
		End module, 5.2 mm 0.205 in			TC5-R1	1SNK900201R0000		10	5.20
7	**Coding pegs**			Dark grey	COP-ZD	1SNK900636R0000		10	3.57
8	**Terminal block markers**	Blank marker		White	MG-CPM 13 41790	1SNB041790R0512		1960	0.23
		Blank card			MC512	1SNK140000R0000		22	9.00
					MC512PA	1SNK149999R0000		20	10.00
		Universal wire markers holder		Grey	UMH	1SNK900611R0000		10	0.20

Complete list of accessories is indicated in the terminal block datasheet including end stops.
Some accessories such as jumper bars may modify the terminal block's ratings: Complete information available in the accessories section of the catalog.

Technical data valid for copper conductors only.

1SNK164003S0201

CDS4 Screw clamp female plugs

Female plug - 5.2 mm 0.205 in spacing

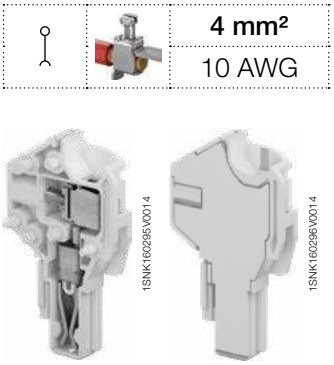

CDS4 CDS4-E

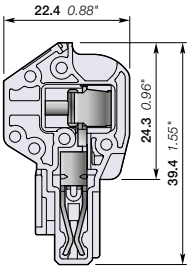

5.2 mm 0.205 in spacing

4 mm²	
10 AWG	

Description

- Create your own female plug assemblies without any special tools, easily snap together multiple plugs for optimal ergonomics and quick assembly,
- Increase your flexibility: eliminate stock of pre-configured female plugs, easily add an extra plug in case of needed modification,
- Reduce your stock of unitary plugs up to 30%: only two plug variants are required to compose your own subsets of plugs from 2 to 15 poles.

Ordering details

Description	Color	Type	Part Number		Pkg qty	Weight (1 pce) g
Female plugs	Grey	CDS4	1SNK805714R0000		50	3.90
Female plugs without outer nubs - Closed		CDS4-E	1SNK805715R0000		50	4.10

Main technical data

Connecting capacity		IEC	UL - CSA
1 conductor per clamp	Rigid - Solid / Stranded	0.2 ... 4 mm²	24 ... 10 AWG
	Flexible	0.22 ... 4 mm²	
	with non insulated ferrule	0.22 ... 4 mm²	24 ... 10 AWG
	with insulated ferrule	0.22 ... 2.5 mm²	24 ... 12 AWG
	Gauge	A3-B3	
2 conductors per clamp	Rigid - Solid / Stranded	0.2 ... 1.5 mm²	24 ... 16 AWG
	Flexible	0.22 ... 1.5 mm²	
	with twin ferrule	0.22 ... 1.5 mm²	24 ... 16 AWG
Rated current / Rated cross section		29 A / 4 mm²	28 A / 10 AWG
Rated short-time withstand current (1s)		480 A	
Rated voltage		800 V	300 V
Impulse withstand voltage		8000 V	
Protection		IP20	NEMA 1

Mounting instructions

Rail		
Wire stripping length		10.5 mm 0.413 in
Tool		Flat screwdriver Ø 3.5 mm Ø 0.138 in
Torque		0.6 Nm ± 0.1 5.31 lb.in ± 0.885

The connecting capacity data for one Rigid - Solid / Stranded - Flexible conductor (when applicable) is a mandatory information required by IEC, UL and CSA standards (Copper conductors). All other data are provided as supplementary information only. For more details, please consult our CB, UL or CSA certificates and technical datasheet available on http://www.TE.com

CE CB RoHS USR CNR CSA EAC BV

Mounting instructions

15 poles max.

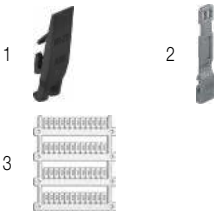

Accessories

	Description		Color	Type	Part Number		Pkg qty	Weight (1 pce) g
1	Locking devices	9.4 mm 0.370 in spacing	Black	VR-ZD	1SNK900637R0000		50	0.7
2	Cable Clamp	9.4 mm 0.370 in spacing	Dark grey	PT-ZD	1SNK900660R0000		50	1.04
3	Terminal block markers	Blank marker	White	MG-CPM 13 41790	1SNB041790R0512		1960	0.23
		Blank strip label		MG-CPMFA 43196	1SNB043196R0012		350	2.56
		Blank card		MC512	1SNK140000R0000		22	9.00
				MC512PA	1SNK149999R0000		20	10.00
		Universal wire markers holder	Grey	UMH	1SNK900611R0000		10	0.20

Complete list of accessories is indicated in the terminal block datasheet including end stops.
Some accessories such as jumper bars may modify the terminal block's ratings: Complete information available in the accessories section of the catalog.

Technical data valid for copper conductors only.

1SNK164007S0201

ZDS4-22-R1 Screw clamp pluggable terminal blocks

Feed-through - 6 mm 0.236 in spacing

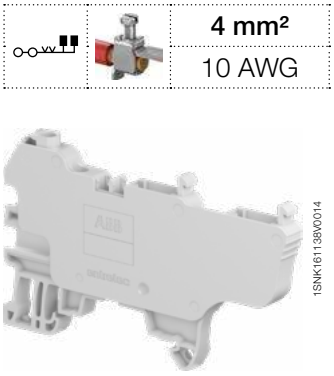

4 mm²
10 AWG

1SNK161138V0014

ZDS4-22-R1

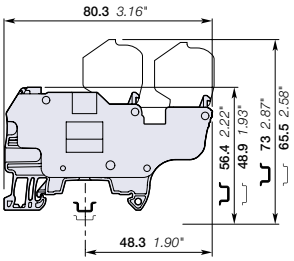

6 mm 0.236 in spacing

Description

- Increase your productivity with pluggable terminal blocks: possibility of pre-produced plugs harnesses, time saving plug and play assembly, reduced transportation panels preparation and final installation, easily connect sub-assemblies together,
- Simplify and secure your installation: in site faulty connection errors are eliminated, prior connection testing is eased and reliable, test connectors (TC5-R1 + ES-TC6) withstanding 10 000 operations are compatible for convenient testing.

Ordering details

Description		Color	Type	Part Number		Pkg qty	Weight (1 pce) g
Feed-through	4 connections	Grey	ZDS4-22-R1	1SNK806013R0000		40	12.60

Main technical data

Connecting capacity		IEC	UL - CSA
1 conductor per clamp	Rigid - Solid / Stranded	0.2 ... 4 mm²	24 ... 10 AWG
	Flexible	0.22 ... 4 mm²	
	with non insulated ferrule	0.22 ... 4 mm²	24 ... 10 AWG
	with insulated ferrule	0.22 ... 4 mm²	24 ... 10 AWG
	Gauge	A3-B3	
2 conductors per clamp	Rigid - Solid / Stranded	0.2 ... 1.5 mm²	24 ... 16 AWG
	Flexible	0.22 ... 1.5 mm²	
	with twin ferrule	0.22 ... 1.5 mm²	24 ... 16 AWG
Rated current / Rated cross section		29 A / 4 mm²	28 A / 10 AWG
Rated short-time withstand current (1s)		480 A	
Rated voltage		800 V	300 V
Impulse withstand voltage		8000 V	
Protection		IP20	NEMA 1

Mounting instructions

Rail	TH 35-7.5, TH 35-15
Wire stripping length	10.5 mm 0.413 in
Tool	Flat screwdriver Ø 3.5 mm Ø 0.138 in
Torque	0.6 Nm ± 0.1 5.31 lb.in ± 0.885

The connecting capacity data for one Rigid - Solid / Stranded - Flexible conductor (when applicable) is a mandatory information required by IEC, UL and CSA standards (Copper conductors). All other data are provided as supplementary information only. For more details, please consult our CB, UL or CSA certificates and technical datasheet available on http://www.TE.com

CE | CB | RoHS | USR CNR | CSA | EAC | BV

4

CDS4-R1 CDS4-E

Female plugs

Description		Color	Type	Part Number		Pkg qty	Weight (1 pce) g
Female plugs	1 pole	Grey	CDS4-R1	1SNK806714R0000		50	4.10
Female plugs without outer nubs - Closed			CDS4-E	1SNK805715R0000		50	4.10

15 poles max.

Accessories

	Description			Color	Type	Part Number		Pkg qty	Weight (1 pce) g
1	**End stops**	10 mm	0.394 in	Dark grey	BAM4	1SNK900001R0000		50	14.00
2	**Jumper bars**	2 poles	41 A (IEC)	Orange	JB6-2	1SNK906302R0000		50	1.30
		3 poles	41 A (IEC)		JB6-3	1SNK906303R0000		50	2.10
		4 poles	41 A (IEC)		JB6-4	1SNK906304R0000		50	2.90
		5 poles	41 A (IEC)		JB6-5	1SNK906305R0000		50	3.60
		10 poles	41 A (IEC)		JB6-10	1SNK906310R0000		20	7.40
		50 poles	41 A (IEC)		JB6-50	1SNK906350R0000		10	38.10
3	**Circuit separators**	3 mm	0.118 in	Dark grey	CS-R3	1SNK900107R0000		20	6.40
4	**Test adapters**	For test plugs DIA 2 mm 0.079 in		Dark grey	TP2	1SNK900203R0000		20	1.70
		For test plugs DIA 4 mm 0.157 in			TP4	1SNK900205R0000		20	2.40
5	**Test connectors**	End module, 5.2 mm 0.205 in		Dark grey	TC5-R1	1SNK900201R0000		10	5.20
6	**Spacers**	0.8 mm	0.031 in	Dark grey	ES-TC6	1SNK900105R0000		10	0.80
7	**Coding pegs**			Dark grey	COP-ZD	1SNK900636R0000		10	3.57
8	**Terminal block markers**	Blank marker		White	MG-CPM 13 41791	1SNB041791R0612		1680	0.27
		Blank card			MC612	1SNK150000R0000		22	10.00
					MC612PA	1SNK159999R0000		20	11.00
		Universal wire markers holder		Grey	UMH	1SNK900611R0000		10	0.20

Complete list of accessories is indicated in the terminal block datasheet including end stops.
Some accessories such as jumper bars may modify the terminal block's ratings: Complete information available in the accessories section of the catalog.

1SNK164004S0201

Technical data valid for copper conductors only.

CDS4-R1 Screw clamp female plugs

Female plug - 6 mm 0.236 in spacing

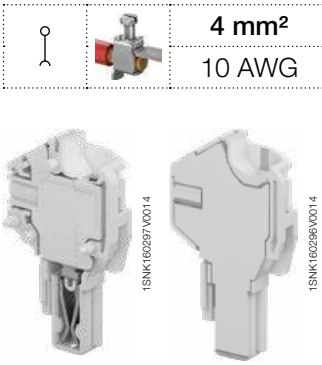

CDS4-R1 CDS4-E

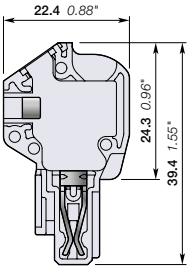

6 mm 0.236 in spacing

		4 mm²
		10 AWG

Description

- Create your own female plug assemblies without any special tools, easily snap together multiple plugs for optimal ergonomics and quick assembly,
- Increase your flexibility: eliminate stock of pre-configured female plugs, easily add an extra plug in case of needed modification,
- Reduce your stock of unitary plugs up to 30%: only two plug variants are required to compose your own subsets of plugs from 2 to 15 poles.

Ordering details

Description	Color	Type	Part Number		Pkg qty	Weight (1 pce) g
Female plugs	Grey	CDS4-R1	1SNK806714R0000		50	4.10
Female plugs without outer nubs - Closed		CDS4-E	1SNK805715R0000		50	4.10

Main technical data

Connecting capacity		IEC	UL - CSA
1 conductor per clamp	Rigid - Solid / Stranded	0.2 ... 4 mm²	24 ... 10 AWG
	Flexible	0.22 ... 4 mm²	
	with non insulated ferrule	0.22 ... 4 mm²	24 ... 10 AWG
	with insulated ferrule	0.22 ... 4 mm²	24 ... 10 AWG
	Gauge	A3-B3	
2 conductors per clamp	Rigid - Solid / Stranded	0.2 ... 1.5 mm²	24 ... 16 AWG
	Flexible	0.22 ... 1.5 mm²	
	with twin ferrule	0.22 ... 1.5 mm²	24 ... 16 AWG
Rated current / Rated cross section		29 A / 4 mm²	28 A / 10 AWG
Rated short-time withstand current (1s)		480 A	
Rated voltage		800 V	300 V
Impulse withstand voltage		8000 V	
Protection		IP20	NEMA 1

Mounting instructions

Rail		
Wire stripping length		10.5 mm 0.413 in
Tool		Flat screwdriver Ø 3.5 mm Ø 0.138 in
Torque		0.6 Nm ± 0.1 5.31 lb.in ± 0.885

The connecting capacity data for one Rigid - Solid / Stranded - Flexible conductor (when applicable) is a mandatory information required by IEC, UL and CSA standards (Copper conductors). All other data are provided as supplementary information only. For more details, please consult our CB, UL or CSA certificates and technical datasheet available on http://www.TE.com

CE CB RoHS USR CNR CSA EAC BV

Mounting instructions

15 poles max.

Accessories

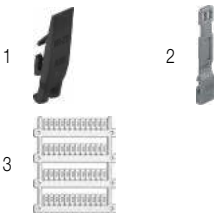

	Description		Color	Type	Part Number		Pkg qty	Weight (1 pce) g
1	**Locking devices**	9.4 mm 0.370 in spacing	Black	VR-ZD	1SNK900637R0000		50	0.7
2	**Cable Clamp**	9.4 mm 0.370 in spacing	Dark grey	PT-ZD	1SNK900660R0000		50	1.04
3	**Terminal block markers**	Blank marker	White	MG-CPM 13 41791	1SNB041791R0612		1680	0.27
		Blank strip label		MG-CPMFA 43196	1SNB043196R0012		350	2.56
		Blank card		MC612	1SNK150000R0000		22	10.00
				MC612PA	1SNK159999R0000		20	11.00
		Universal wire markers holder	Grey	UMH	1SNK900611R0000		10	0.20

Complete list of accessories is indicated in the terminal block datasheet including end stops.
Some accessories such as jumper bars may modify the terminal block's ratings: Complete information available in the accessories section of the catalog.

Technical data valid for copper conductors only.

1SNK164008S0201

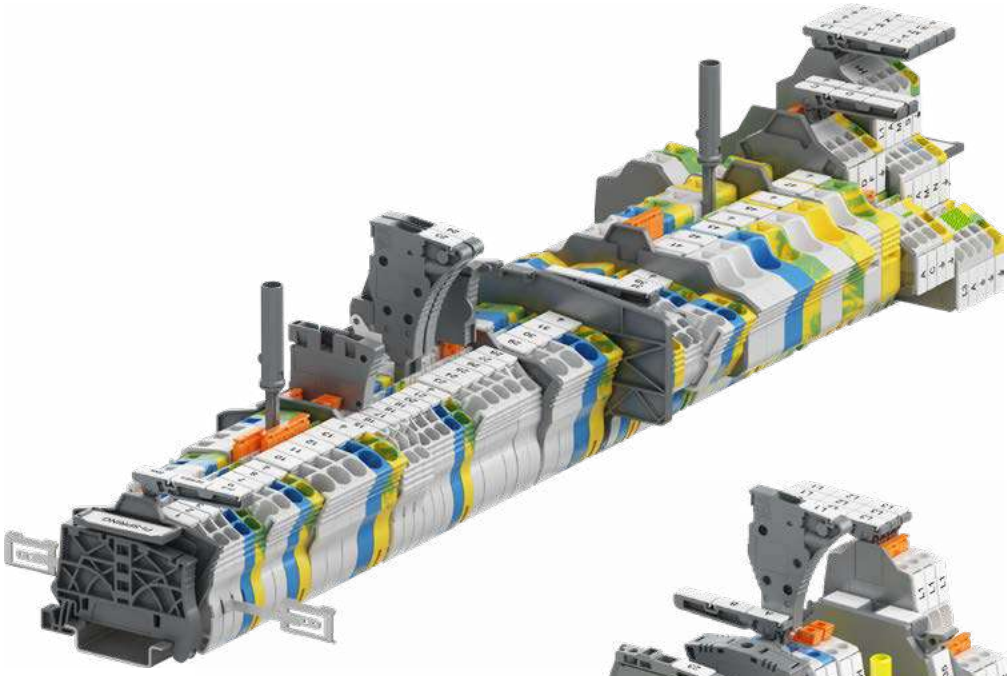

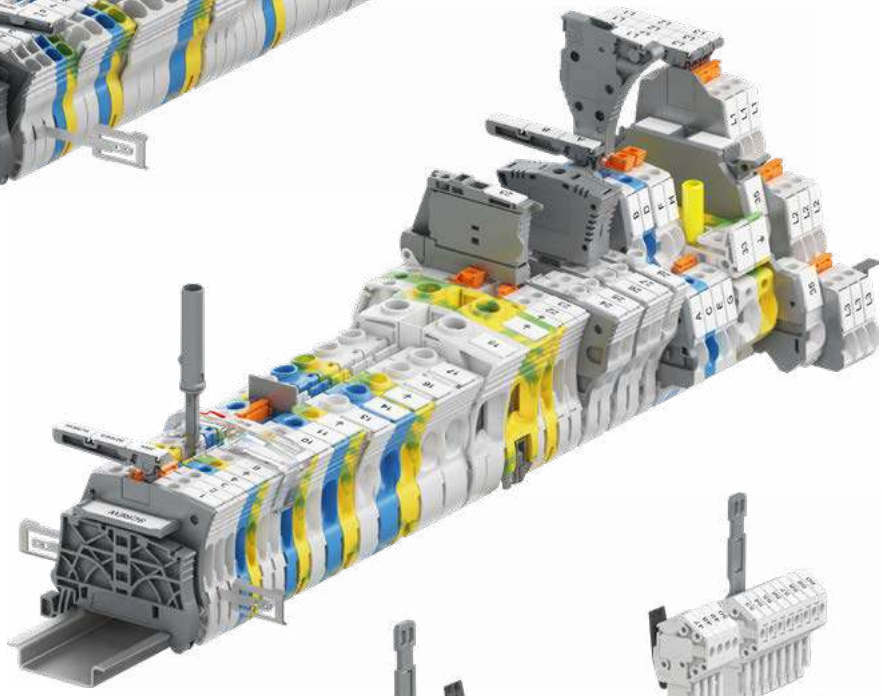

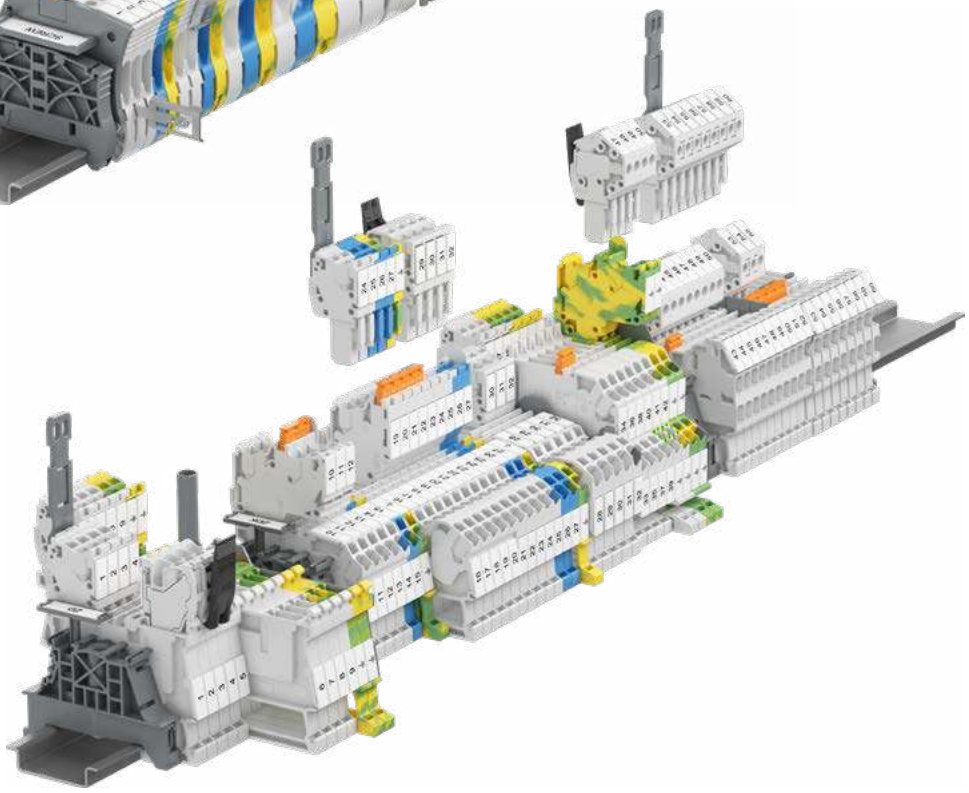

SNK series, terminal block accessories

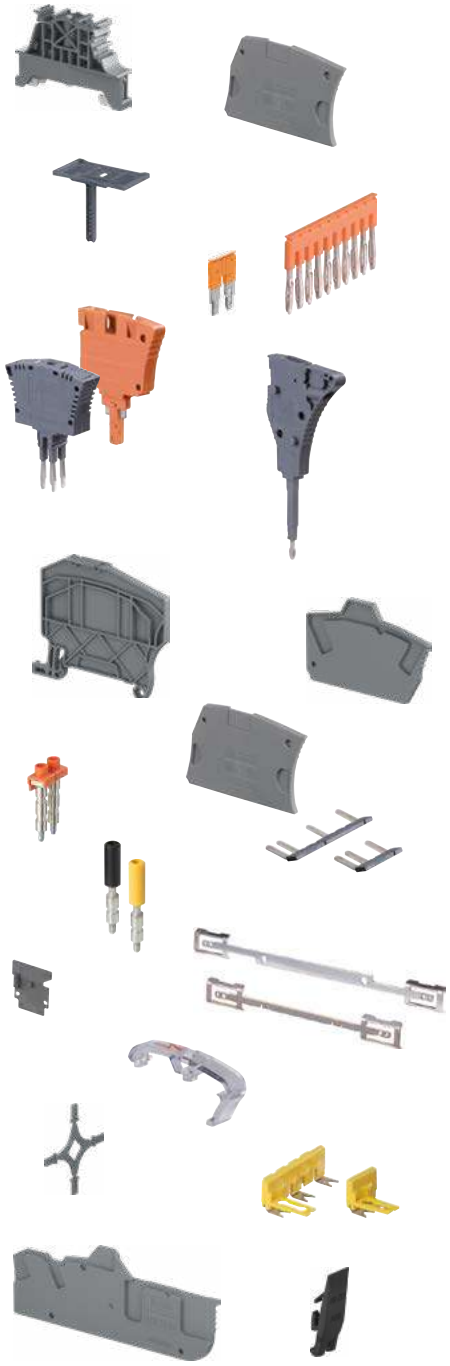

Common terminal block accessories

Mounting rail	**PR**	196-198
Screw end stops	**BAM4, BAZH1**	199
Screwless end stops	**BAZ1**	200
Label holders	**LH, LH-R1**	201
	LH-J	202
Screwless jumper bars	**JB5**	203
	JB6	204
	JB8	205
	JB10	206
	JB12	207
Cross spacing jumpers	**JB85-3**	208
Test adapters	**TP2, TP4**	209
Test connectors	**TC5**	210
Component plugs	**PG5-R2**	211
	PG5, PG5-R1	212
Screwdrivers	**TO**	213
Crimping tools	**PS**	213

PI-Spring terminal block accessories

End sections	**EK**	214-216
Circuit separators	**CS-R2, CS-R3**	217-218
Shield connectors	**SHBP, SHB**	219

Screw clamp terminal block accessories

End sections	**ES**	220-221
Screw jumper bars	**JB8**	222
	JB16, JB22	223
	JB26	224
	BJMI31, BJMI36	225
Lateral jumper bars	**PC8, PC81**	226
Circuit separator	**CS, CS-R1**	227
Shield connectors	**SHBS, SHB**	228
Protecting covers	**PL**	229
	CO, KCO	230
Short circuit bridges	**SC-JB8**	231
Test sockets	**AJS9**	232

Pluggable terminal block accessories

End sections	**EDK, EDS**	233-234
Coding pegs	**COP**	235
Locking devices	**VR**	235

1SNK500072F0000

PR30

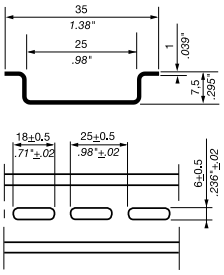

2000 mm 78.74 in spacing

Description

- Pre-punched symmetrical mounting rail,
- The slotted holes ease the mounting and allow to use existing and/or numerous fixings,
- Particularly well designed for fixing onto back-plates and for terminal assemblies of small dimensions.

Ordering details

Description	Color	Type	Part Number		Pkg meter	Weight (1 pce) g
Prepunched rail		PR30	1SNA173220R0500		2	328.00

Please note that for all rails: 1 part number equal 1 meter (39 in). Packing of 2 meters (78 in) minimum.
Check that your order quantity is a multiple of 2.

Main technical data

Material	Zinc plating and passivation steel	
Rail	TH 35-7.5	
	IEC	UL - CSA
Equivalent E-Cu cross section		

All the main technical data provided are "manufacturer" values.

RoHS
RoHS

Mounting instructions

- In order to guarantee the performances and security of your installation, please ensure the rail and its fixings can withstand the static and dynamic loads of the components mounted on it;
- To prevent the rail from flexing (1 mm 0.039 in rail thickness only), fixing is recommended every 250 mm 9.84 in;
- To prevent any issues during mounting, screw heads used for rail fixing should not protrude from the rail (7,5 mm 0.295 in rail height only).

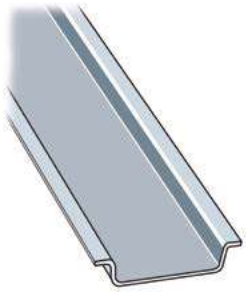

1SNK500073F0000

PR3.Z2

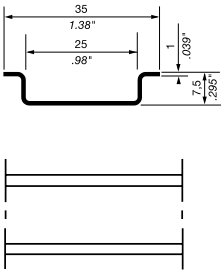

2000 mm 78.74 in spacing

Description

- Symmetrical mounting rail complying with IEC60715,
- Particularly well designed for fixing onto back-plates and for terminal assemblies of small dimensions.

Ordering details

Description	Color	Type	Part Number		Pkg meter	Weight (1 pce) g
		PR3.Z2	1SNA174300R1700		2	718.00

Please note that for all rails: 1 part number equal 1 meter (39 in). Packing of 2 meters (78 in) minimum.
Check that your order quantity is a multiple of 2.

Main technical data

Material	Zinc plating and passivation steel	
Rail	TH 35-7.5	
	IEC	UL - CSA
Equivalent E-Cu cross section	16 mm²	

All the main technical data provided are "manufacturer" values.

RoHS
RoHS

Mounting instructions

- In order to guarantee the performances and security of your installation, please ensure the rail and its fixings can withstand the static and dynamic loads of the components mounted on it;
- To prevent the rail from flexing (1 mm 0.039 in rail thickness only), fixing is recommended every 250 mm 9.84 in;
- To prevent any issues during mounting, screw heads used for rail fixing should not protrude from the rail (7,5 mm 0.295 in rail height only).

1SNK160017S0201

Technical data valid for copper conductors only.

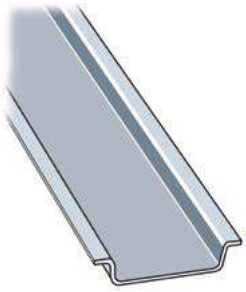

PR3.G2

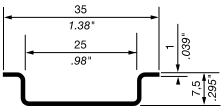

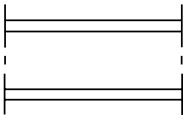

2000 mm 78.74 in spacing

Description

- Symmetrical mounting rail made of galvanised steel, complying with IEC60715,
- Particularly well designed for fixing onto back-plates and for terminal assemblies of small dimensions.

Ordering details

Description	Color	Type	Part Number		Pkg meter	Weight (1 pce) g
		PR3.G2	1SNA164800R0300		2	718.00

Please note that for all rails: 1 part number equal 1 meter (39 in). Packing of 2 meters (78 in) minimum.
Check that your order quantity is a multiple of 2.

Main technical data

Material	Galvanised steel	
Rail	TH 35-7.5	
	IEC	UL - CSA
Equivalent E-Cu cross section	16 mm²	

All the main technical data provided are "manufacturer" values.

RoHS
RoHS

Mounting instructions

- In order to guarantee the performances and security of your installation, please ensure the rail and its fixings can withstand the static and dynamic loads of the components mounted on it;
- To prevent the rail from flexing (1 mm 0.039 in rail thickness only), fixing is recommended every 250 mm 9.84 in;
- To prevent any issues during mounting, screw heads used for rail fixing should not protrude from the rail (7,5 mm 0.295 in rail height only).

PR50

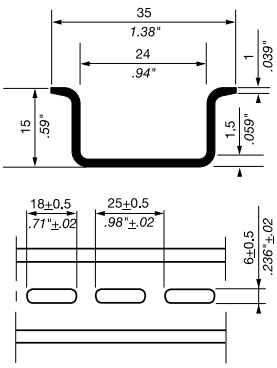

2000 mm 78.74 in spacing

Description

- Pre-punched symmetrical mounting rail,
- The slotted holes ease the mounting and allow to use existing and/or numerous fixings.

Ordering details

Description	Color	Type	Part Number		Pkg meter	Weight (1 pce) g
Preprunched rail		PR50	1SNA178529R0400		2	1288.00

Please note that for all rails: 1 part number equal 1 meter (39 in). Packing of 2 meters (78 in) minimum.
Check that your order quantity is a multiple of 2.

Main technical data

Material	Zinc plating and passivation steel	
Rail	TH 35-15	
	IEC	UL - CSA
Equivalent E-Cu cross section		

All the main technical data provided are "manufacturer" values.

RoHS
RoHS

Mounting instructions

- In order to guarantee the performances and security of your installation, please ensure the rail and its fixings can withstand the static and dynamic loads of the components mounted on it;
- To prevent the rail from flexing, fixing is recommended every 700 mm 27.6 in;
- In order to increase the accessibility of your terminal assembly, we recommend the use of our rail offset brackets EM45 (order code 1SNA008521R2600) for a 45° orientation of the rail.

Technical data valid for copper conductors only.

1SNK500075F0000

PR5

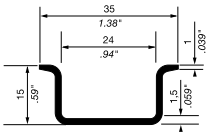

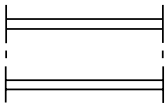

2000 mm 78.74 in spacing

Description

– Symmetrical mounting rail.

Ordering details

Description	Color	Type	Part Number		Pkg meter	Weight (1 pce) g
		PR5	1SNA168700R2200		2	1200.00

Please note that for all rails: 1 part number equal 1 meter (39 in). Packing of 2 meters (78 in) minimum.
Check that your order quantity is a multiple of 2.

Main technical data

Material	Zinc plating and passivation steel		
Rail	TH 35-15		
	IEC	UL - CSA	
Equivalent E-Cu cross section			

All the main technical data provided are "manufacturer" values.

RoHS
RoHS

Mounting instructions

– In order to guarantee the performances and security of your installation, please ensure the rail and its fixings can withstand the static and dynamic loads of the components mounted on it;
– To prevent the rail from flexing, fixing is recommended every 700 mm 27.6 in;
– In order to increase the accessibility of your terminal assembly, we recommend the use of our rail offset brackets EM45 (order code 1SNA008521R2600) for a 45° orientation of the rail.

1SNK500076F0000

PR4

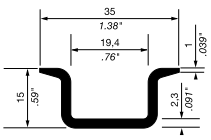

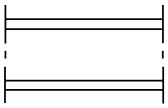

2000 mm 78.74 in spacing

Description

– Symmetrical mounting rail complying with IEC60715,
– The rigidity of the rail is maximised by the 2.3 mm 0.090 in thickness of the rail, and by its solid, non slotted construction,
– PR4 TH 35-15 is the most rigid mounting rail solution and it can suppo

Ordering details

Description	Color	Type	Part Number		Pkg meter	Weight (1 pce) g
Recommended for SNK ground terminal blocks up to 35 mm² 2 AWG		PR4	1SNA168500R1200		2	915.00

Please note that for all rails: 1 part number equal 1 meter (39 in). Packing of 2 meters (78 in) minimum.
Check that your order quantity is a multiple of 2.

Main technical data

Material	Zinc plating and passivation steel		
Rail	TH 35-15		
	IEC	UL - CSA	
Equivalent E-Cu cross section	50 mm²	2 AWG	

All the main technical data provided are "manufacturer" values.

RoHS
RoHS

Mounting instructions

– In order to guarantee the performances and security of your installation, please ensure the rail and its fixings can withstand the static and dynamic loads of the components mounted on it;
– To prevent the rail from flexing, fixing is recommended every 700 mm 27.6 in;
– In order to increase the accessibility of your terminal assembly, we recommend the use of our rail offset brackets EM45 (order code 1SNA008521R2600) for a 45° orientation of the rail.

Technical data valid for copper conductors only.

1SNK160041S0201

BAM4

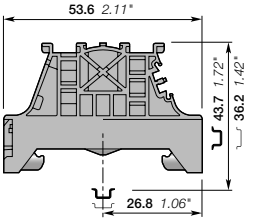

10 mm 0.394 in spacing

Mounting instructions

BAM4 screw end stops

Description

- Give efficient support to the SNK terminal blocks assemblies thanks to the BAM4 double gripping rail contact,
- Ease the assemblies identification with the BAM4 marking location compatible with all SNK markers and labels.

Ordering details

Description	Color	Type	Part Number		Pkg qty	Weight (1 pce) g
10 mm 0.394 in spacing	Dark grey	BAM4	1SNK900001R0000		50	14.00

Main technical data

Material specifications	Insulating material	Polyamide	
	Flammability	V0	
	NF F 16 101	I2F2	
Ambient temperature min/max	Service IEC 60068-2-1	-55 ... +110 °C	-67 ... +230 °F
	Storage	-55 ... +110 °C	-67 ... +230 °F
	Installing	-5 ... +40 °C	+23 ... +104 °F

Mounting instructions

Rail	TH 35-7.5, TH 35-15
Tool	Flat screwdriver Ø 5.5 mm Ø 0.217 in
Torque	0.9 Nm ± 0.1 7.08 lb.in ± 0.88

All the main technical data provided are "manufacturer" values

RoHS
RoHS

Accessories

Description		Color	Type	Part Number		Pkg qty	Weight (1 pce) g
Terminal block markers	compatible with MG3	White	MG-CPM 13 41791	1SNB041791R0612		1680	0.27
Blank card	In polycarbonate		MC812	1SNK160000R0000		22	10.00
	In polyamide		MC812PA	1SNK169999R0000		20	14.00
Label holder	10 mm 0.394 in width	Dark grey	LH	1SNK900605R0000		50	0.60
	19.5 mm 0.768 in width		LH-R1	1SNK900607R0000		50	1.10
Universal wire markers holder	5.2 mm 0.205 in spacing	Grey	UMH	1SNK900611R0000		10	0.20

BAZH1

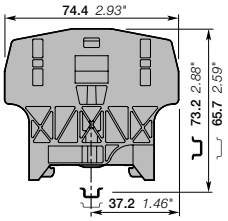

10 mm 0.394 in spacing

BAZH1 screw end stops

Description

- Give efficient support to the SNK double deck or power terminal blocks assemblies thanks to the BAZH1 double gripping rail contact,
- Ease the assemblies identification with label holders.

Ordering details

Description	Color	Type	Part Number		Pkg qty	Weight (1 pce) g
10 mm 0.394 in spacing	Dark grey	BAZH1	1SNK900102R0000		20	24.00

Main technical data

Material specifications	Insulating material	Polyamide	
	Flammability	V0	
	NF F 16 101	I2F2	
Ambient temperature min/max	Service IEC 60068-2-1	-55 ... +110 °C	-67 ... +230 °F
	Storage	-55 ... +110 °C	-67 ... +230 °F
	Installing	-5 ... +40 °C	+23 ... +104 °F

Mounting instructions

Rail	TH 35-7.5
Tool	Flat screwdriver Ø 5.5 mm Ø 0.217 in
Torque	1.3 Nm ± 0.1 11.4 lb.in ± 0.88

All the main technical data provided are "manufacturer" values

RoHS
RoHS

Accessories

Description		Color	Type	Part Number		Pkg qty	Weight (1 pce) g
Terminal block markers	compatible with MG3	White	MG-CPM 13 41791	1SNB041791R0612		1680	0.27
Blank card	In polycarbonate		MC812	1SNK160000R0000		22	10.00
	In polyamide		MC812PA	1SNK169999R0000		20	14.00
Label holder	10 mm 0.394 in width	Dark grey	LH	1SNK900605R0000		50	0.60
	19.5 mm 0.768 in width		LH-R1	1SNK900607R0000		50	1.10
Universal wire markers holder	5.2 mm 0.205 in spacing	Grey	UMH	1SNK900611R0000		10	0.20

Technical data valid for copper conductors only.

1SNK160026S0201

BAZ1

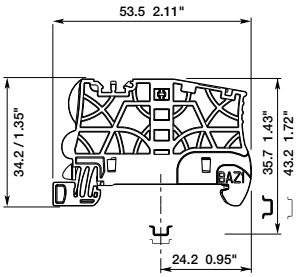

5.2 mm 0.205 in spacing

BAZ1 screwless end stops

Description

- Reduce the size of your terminal block assemblies with the screwless reduced spacing BAZ1 end stop,
- Ease the assemblies identification with various markers and label holders.

Ordering details

Description	Color	Type	Part Number		Pkg qty	Weight (1 pce) g
5.2 mm 0.205 in spacing	Dark grey	BAZ1	1SNK900002R0000		50	5.30

Main technical data

Material specifications	Insulating material	Polyamide	
	Flammability	V0	
	NF F 16 101	I2F2	
Ambient temperature min/max	Service IEC 60068-2-1	-55 ... +110 °C	-67 ... +230 °F
	Storage	-55 ... +110 °C	-67 ... +230 °F
	Installing	-5 ... +40 °C	+23 ... +104 °F

All the main technical data provided are "manufacturer" values

Mounting instructions

Rail		TH 35-7.5

RoHS
RoHS

Accessories

Description		Color	Type	Part Number		Pkg qty	Weight (1 pce) g
Terminal block markers	compatible with MG3	White	MG-CPM 13 41790	1SNB041790R0512		1960	0.23
Blank card	compatible with HTP500		MC512	1SNK140000R0000		22	9.00
	compatible with AMS600		MC512PA	1SNK149999R0000		20	10.00
Label holder	10 mm 0.394 in width	Dark grey	LH	1SNK900605R0000		50	0.60
	19.5 mm 0.768 in width		LH-R1	1SNK900607R0000		50	1.10
Universal wire markers holder	5.2 mm 0.205 in spacing	Grey	UMH	1SNK900611R0000		10	0.20

Technical data valid for copper conductors only.

LH

10 mm 0.394 in spacing

LH label holder

Description

- Easily identify your terminal blocks assembly with white or yellow labels,
- Adjustable in height for best visibility,
- Compatible with all SNK end stops.

Ordering details

Description	Color	Type	Part Number		Pkg qty	Weight (1 pce) g
10 mm 0.394 in width	Dark grey	LH	1SNK900605R0000		50	0.60

Main technical data

Material specifications	Insulating material	Polyamide	
	Flammability	V0	
	NF F 16 101	I2F2	
Ambient temperature min/max	Service IEC 60068-2-1	-55 ... +110 °C	-67 ... +230 °F
	Storage	-55 ... +110 °C	-67 ... +230 °F
	Installing	-5 ... +40 °C	+23 ... +104 °F

All the main technical data provided are "manufacturer" values

RoHS
RoHS

Accessories

Description		Color	Type	Part Number		Pkg qty	Weight (1 pce) g
Self-adhesive precut blank label	compatible with HTP500	White	MCLH	1SNK900630R0000		25	10.00
Self-adhesive precut blank label	compatible with HTP500	White	RCPEAD-TT	1SNA235158R0100		25	9.80
		Yellow	RCPEAD-TT-YL	1SNA235159R0200		25	12.10
Pre-printed cover marker	Protection for RCPEAD markers	Transparent	EPR2	1SNA399726R0700		10	4.00
Precut blank label	compatible with MG3	White	MG-TAR 45490	1SNB045490R8530		1650	0.371
Self-adhesive precut blank label	compatible with MG3	Yellow	MG-TAA 49448	1SNB049448R8530		825	0.55
		White	MG-TAA 49498	1SNB049498R8530		825	0.55
Self-adhesive precut blank label	compatible with HTP500	Yellow	MCLH-YL	1SNK900633R0000		25	10.00

LH

19.5 mm 0.768 in spacing

Mounting instructions

LH-R1 label holder

Description

- Easily identify your terminal blocks assembly with white or yellow labels,
- Adjustable in height for best visibility,
- Compatible with all SNK end stops.

Ordering details

Description	Color	Type	Part Number		Pkg qty	Weight (1 pce) g
19.5 mm 0.768 in width	Dark grey	LH-R1	1SNK900607R0000		50	1.10

Main technical data

Material specifications	Insulating material	Polyamide	
	Flammability	V0	
	NF F 16 101	I2F2	
Ambient temperature min/max	Service IEC 60068-2-1	-55 ... +110 °C	-67 ... +230 °F
	Storage	-55 ... +110 °C	-67 ... +230 °F
	Installing	-5 ... +40 °C	+23 ... +104 °F

All the main technical data provided are "manufacturer" values

RoHS
RoHS

Accessories

Description		Color	Type	Part Number		Pkg qty	Weight (1 pce) g
Self-adhesive precut blank label	compatible with HTP500	White	MCLH-R1	1SNK900631R0000		25	10.00
Precut blank label	compatible with AMS600	White	RCPEB	1SNA178430R0500		1	
	Protection for RCPEB markers	Transparent	EPR1	1SNA178431R2200		1	0.05
Self-adhesive precut blank label	compatible with HTP500	White	PIB2-TT	1SNA235155R2600		25	9.70
		Yellow	PIB2-TT-YL	1SNA235157R2000		25	9.40
Precut blank label	compatible with MG3	White	MG-TAR 45194	1SNB045194R1735		900	0.62
Self-adhesive precut blank label		Yellow	MG-TAA 49148	1SNB049148R1735		450	0.91
		White	MG-TAA 49198	1SNB049198R1735		450	0.91
Self-adhesive precut blank label	compatible with HTP500	Yellow	MCLH-R1-YL	1SNK900634R0000		25	10.00

Technical data valid for copper conductors only.

1SNK160023S0201

LH

4.8 mm 0.189 in spacing

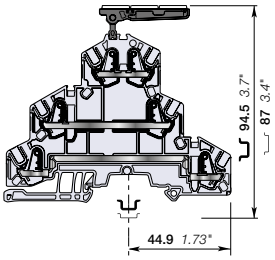

LH-J label holder

Description

Easily identify your block with three standard 5.2 mm 0.205 in spacing SNK markers. It fits in the jumper channel of the SNK terminal blocks.

Ordering details

Description	Color	Type	Part Number		Pkg qty	Weight (1 pce) g
Rotating label holder with three SNK markers housings - 4.8 mm 0.189 in spacing	Dark grey	LH-J	1SNK900606R0000		100	0.73

Main technical data

Material specifications	Insulating material	Polyamide	
	Flammability	V0	
	NF F 16 101	I2F2	
Ambient temperature min/max	Service IEC 60068-2-1	-55 ... +110 °C	-67 ... +230 °F
	Storage	-55 ... +110 °C	-67 ... +230 °F
	Installing	-5 ... +40 °C	+23 ... +104 °F

All the main technical data provided are "manufacturer" values

RoHS
RoHS

Accessories

Description		Color	Type	Part Number		Pkg qty	Weight (1 pce) g
Blank marker	compatible with MG3	White	MG-CPM 13 41790	1SNB041790R0512		1960	0.23
Blank card	compatible with HTP500	White	MC512	1SNK140000R0000		22	9.00
	compatible with AMS600	White	MC512PA	1SNK149999R0000		20	10.00
Universal wire markers holder	5.2 mm 0.205 in spacing	Grey	UMH	1SNK900611R0000		10	0.20

Technical data valid for copper conductors only.

1SNK160143F0014

JB5

5.2 mm 0.205 in spacing

Description

Facilitate & secure your jumper bar assembly process:
- Screwless mounting,
- Pre-cut poles for alternated jumpering between terminal blocks,
- Insulated,
- Positive locking,
- Perfectly adapted to low level electrical contact (20mA, 50mV).

Ordering details

Description		Color	Type	Part Number	Pkg qty	Weight (1 pce) g
5.2 mm 0.205 in spacing	2 poles	Orange	JB5-2	1SNK905302R0000	50	1.30
	3 poles		JB5-3	1SNK905303R0000	50	2.00
	4 poles		JB5-4	1SNK905304R0000	50	2.70
	5 poles		JB5-5	1SNK905305R0000	50	3.50
	10 poles		JB5-10	1SNK905310R0000	30	7.10
	50 poles		JB5-50	1SNK905350R0000	10	36.00

Main technical data

Material specifications	Insulating material	Polyamide	
	Flammability	V0	
	NF F 16 101	I2F3	
Ambient temperature min/max	Service IEC 60068-2-1	-55 ... +110 °C	-67 ... +230 °F
	Storage	-55 ... +110 °C	-67 ... +230 °F
	Installing	-5 ... +40 °C	+23 ... +104 °F

		IEC	UL - CSA	Ex e
Rated current		32 A	30 A	
Rated voltage	1 - Standard use	1000 V	600 V	Please
	2 - Cut extremities	800 V	300 V	consult
	3 - Cut poles	630 V	300 V	us
	4 - Alternated poles	400 V	150 V	
	5 - Alternated poles with cut extremities	400 V	150 V	
Impulse withstand voltage		8000 V		
Protection		IP20	NEMA 1	

All the main technical data are indicative "manufacturer" values.

RoHS
RoHS

5

Mounting instructions

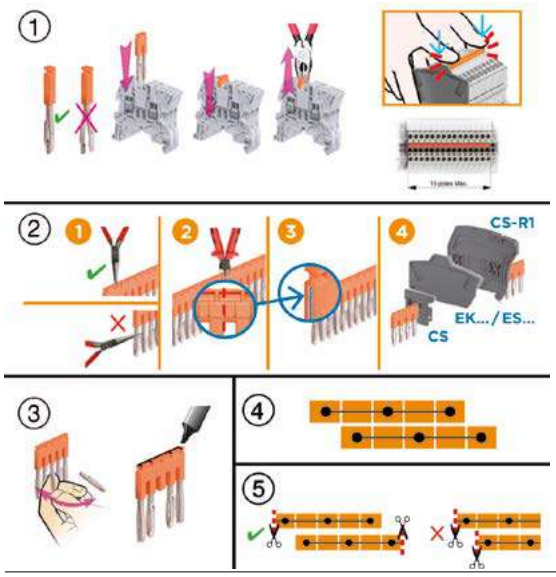

1 - Standard use

2 - Cut extremities

For voltage rating > 50 V and Uimp > 2.5 KV, the below accessories must be installed on the cut side of the jumper to guarantee IP20 and voltage rating:

ZS...	Feed-through	CS circuit separator
	Double deck / triple deck	ES... end section
ZK...	All functions	EK... end section

Ensure a good straight cut by positioning the cutting tool on the vertical snicks of the insulated part of the jumper.

15 poles max. recommended for convenient mounting.

3 - Cut poles

4 - Alternated poles

5 - Alternated poles with cut extremities

When using cut jumpers, cut extremities should be placed oppositely to allow end sections / circuit separators placement at each cut extremities.

For all other applications, please consult us.

1SNK160027S0201

Technical data valid for copper conductors only.

JB6 screwless jumper bars
Common terminal block accessories

1SNK160143F0014

JB6

6 mm 0.236 in spacing

Description

Facilitate & secure your jumper bar assembly process:
- Screwless mounting,
- Pre-cut poles for alternated jumpering between terminal blocks,
- Insulated,
- Positive locking,
- Perfectly adapted to low level electrical contact (20mA, 50mV).

Ordering details

Description		Color	Type	Part Number		Pkg qty	Weight (1 pce) g
6 mm 0.236 in spacing	2 poles	Orange	JB6-2	1SNK906302R0000		50	1.30
	3 poles		JB6-3	1SNK906303R0000		50	2.10
	4 poles		JB6-4	1SNK906304R0000		50	2.90
	5 poles		JB6-5	1SNK906305R0000		50	3.60
	10 poles		JB6-10	1SNK906310R0000		20	7.40
	50 poles		JB6-50	1SNK906350R0000		10	38.10

Main technical data

Material specifications	Insulating material	Polyamide	
	Flammability	V0	
	NF F 16 101	I2F3	
Ambient temperature min/max	Service IEC 60068-2-1	-55 ... +110 °C	-67 ... +230 °F
	Storage	-55 ... +110 °C	-67 ... +230 °F
	Installing	-5 ... +40 °C	+23 ... +104 °F

		IEC	UL - CSA	Ex e
Rated current		41 A	30 A	
Rated voltage	1 - Standard use	1000 V	600 V	Please consult
	2 - Cut extremities	800 V	300 V	our dedicated
	3 - Cut poles	630 V	300 V	certificates
	4 - Alternated poles	400 V	150 V	
	5 - Alternated poles with cut extremities	400 V	150 V	
Impulse withstand voltage		8000 V		
Protection		IP20	NEMA 1	

All the main technical data are indicative "manufacturer" values.

RoHS
RoHS

5

Mounting instructions

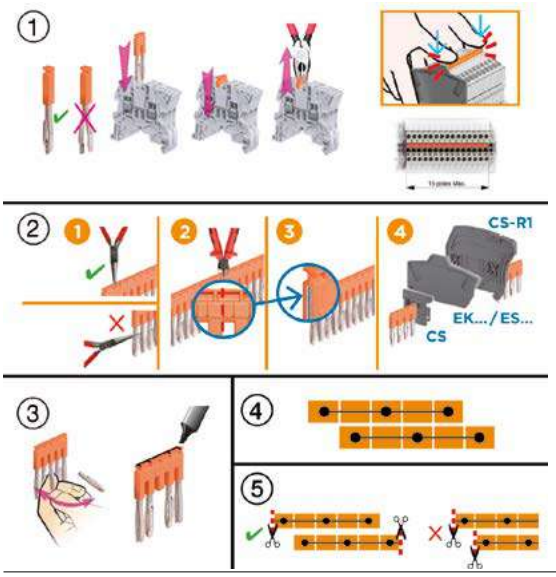

1 - Standard use

2 - Cut extremities

For voltage rating > 50 V and Uimp > 2.5 KV, the below accessories must be installed on the cut side of the jumper to guarantee IP20 and voltage rating:

ZS...	Feed-through	CS circuit separator
	Double deck / triple deck	ES... end section
ZK...	All functions	EK... end section

Ensure a good straight cut by positioning the cutting tool on the vertical snicks of the insulated part of the jumper.

15 poles max. recommended for convenient mounting.

3 - Cut poles

4 - Alternated poles

5 - Alternated poles with cut extremities

When using cut jumpers, cut extremities should be placed oppositely to allow end sections / circuit separators placement at each cut extremities.

For all other applications, please consult us.

1SNK160029S0201

Technical data valid for copper conductors only.

JB8 screwless jumper bars
Common terminal block accessories

JB8

8 mm 0.315 in spacing

Description

Facilitate & secure your jumper bar assembly process:
- Screwless mounting,
- Pre-cut poles for alternated jumpering between terminal blocks,
- Insulated,
- Positive locking,
- Perfectly adapted to low level electrical contact (20mA, 50mV).

Ordering details

Description		Color	Type	Part Number	Pkg qty	Weight (1 pce) g
8 mm 0.315 in spacing	2 poles	Orange	JB8-2	1SNK908302R0000	50	2.70
	3 poles		JB8-3	1SNK908303R0000	50	4.10
	4 poles		JB8-4	1SNK908304R0000	50	5.60
	5 poles		JB8-5	1SNK908305R0000	40	7.00
	10 poles		JB8-10	1SNK908310R0000	20	14.20

Main technical data

Material specifications	Insulating material	Polyamide	
	Flammability	V0	
	NF F 16 101	I2F3	
Ambient temperature min/max	Service IEC 60068-2-1	-55 ... +110 °C	-67 ... +230 °F
	Storage	-55 ... +110 °C	-67 ... +230 °F
	Installing	-5 ... +40 °C	+23 ... +104 °F

		IEC	UL - CSA	Ex e
Rated current		57 A	42 A	
Rated voltage	1 - Standard use	1000 V	600 V	693 V
	2 - Cut extremities	800 V	300 V	440 V
	3 - Cut poles	630 V	300 V	440 V
	4 - Alternated poles	630 V	150 V	352 V
	5 - Alternated poles with cut extremities	630 V	150 V	352 V
Impulse withstand voltage		6000 V		
Protection		IP20	NEMA 1	

All the main technical data are indicative "manufacturer" values.

RoHS
RoHS

5

Mounting instructions

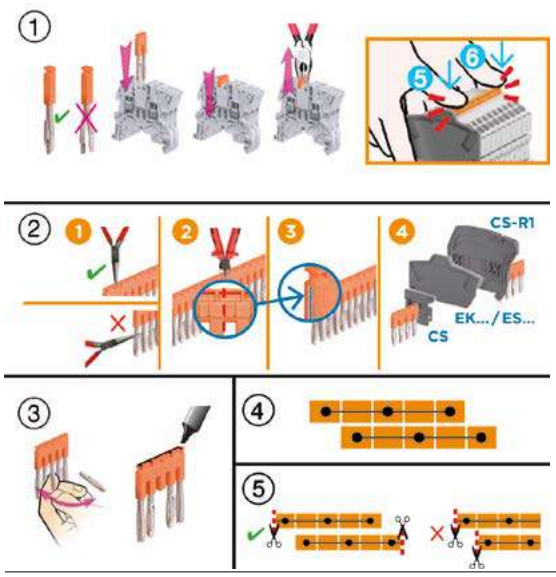

1 - Standard use

2 - Cut extremities

For voltage rating > 50 V and Uimp > 2.5 KV, the below accessories must be installed on the cut side of the jumper to guarantee IP20 and voltage rating:

ZS...	Feed-through	CS circuit separator
	Double deck / triple deck	ES... end section
ZK...	All functions	EK... end section

Ensure a good straight cut by positioning the cutting tool on the vertical snicks of the insulated part of the jumper.

3 - Cut poles

4 - Alternated poles

5 - Alternated poles with cut extremities

When using cut jumpers, cut extremities should be placed oppositely to allow end sections / circuit separators placement at each cut extremities.

For all other applications, please consult us.

1SNK160030S0201

Technical data valid for copper conductors only.

JB10 screwless jumper bars
Common terminal block accessories

1SNK160146F0014

JB10

10 mm 0.394 in spacing

Description

Facilitate & secure your jumper bar assembly process:
- Screwless mounting,
- Pre-cut poles for alternated jumpering between terminal blocks,
- Insulated,
- Positive locking,
- Perfectly adapted to low level electrical contact (20mA, 50mV).

Ordering details

Description		Color	Type	Part Number	Pkg qty	Weight (1 pce) g
10 mm 0.394 in spacing	2 poles	Orange	JB10-2	1SNK910302R0000	50	4.60
	3 poles		JB10-3	1SNK910303R0000	50	7.10
	4 poles		JB10-4	1SNK910304R0000	40	9.40
	5 poles		JB10-5	1SNK910305R0000	30	12.00
	10 poles		JB10-10	1SNK910310R0000	20	24.00

Main technical data

Material specifications	Insulating material	Polyamide	
	Flammability	V0	
	NF F 16 101	I2F3	
Ambient temperature min/max	Service IEC 60068-2-1	-55 ... +110 °C	-67 ... +230 °F
	Storage	-55 ... +110 °C	-67 ... +230 °F
	Installing	-5 ... +40 °C	+23 ... +104 °F

		IEC	UL - CSA	Ex e
Rated current		76 A	67 A	
Rated voltage	1 - Standard use	1000 V	600 V	693 V
	2 - Cut extremities	800 V	300 V	440 V
	3 - Cut poles	630 V	300 V	440 V
	4 - Alternated poles	400 V	150 V	275 V
	5 - Alternated poles with cut extremities	250 V	150 V	176 V
Impulse withstand voltage		6000 V		
Protection		IP20	NEMA 1	

All the main technical data are indicative "manufacturer" values.

RoHS
RoHS

5

Mounting instructions

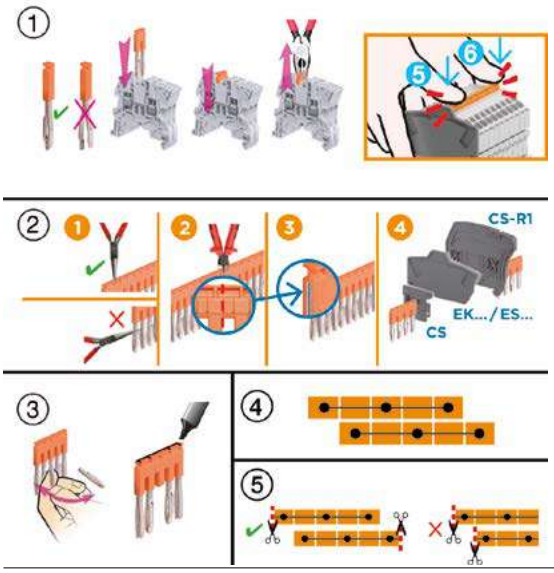

1 - Standard use

2 - Cut extremities

For voltage rating > 50 V and Uimp > 2.5 KV, the below accessories must be installed on the cut side of the jumper to guarantee IP20 and voltage rating:

ZS...	Feed-through	CS circuit separator
	Double deck / triple deck	ES... end section
ZK...	All functions	EK... end section

Ensure a good straight cut by positioning the cutting tool on the vertical snicks of the insulated part of the jumper.

3 - Cut poles

4 - Alternated poles

5 - Alternated poles with cut extremities

When using cut jumpers, cut extremities should be placed oppositely to allow end sections / circuit separators placement at each cut extremities.

For all other applications, please consult us.

1SNK160031S0201

Technical data valid for copper conductors only.

JB12 screwless jumper bars
Common terminal block accessories

JB12

12 mm 0.472 in spacing

Description

Facilitate & secure your jumper bar assembly process:
- Screwless mounting,
- Pre-cut poles for alternated jumpering between terminal blocks,
- Insulated,
- Positive locking,
- Perfectly adapted to low level electrical contact (20mA, 50mV).

Ordering details

Description		Color	Type	Part Number		Pkg qty	Weight (1 pce) g
12 mm 0.472 in spacing	2 poles	Orange	JB12-2	1SNK912302R0000		50	4.90
	3 poles		JB12-3	1SNK912303R0000		50	7.60
	5 poles		JB12-5	1SNK912305R0000		20	12.90

Main technical data

Material specifications	Insulating material	Polyamide	
	Flammability	V0	
	NF F 16 101	I2F2	
Ambient temperature min/max	Service IEC 60068-2-1	-55 ... +110 °C	-67 ... +230 °F
	Storage	-55 ... +110 °C	-67 ... +230 °F
	Installing	-5 ... +40 °C	+23 ... +104 °F

		IEC	UL - CSA	Ex e
Rated current		76 A	67 A	
Rated voltage	1 - Standard use	1000 V	600 V	693 V
	2 - Cut extremities	800 V	300 V	440 V
	3 - Cut poles	630 V	300 V	440 V
	4 - Alternated poles	320 V	150 V	220 V
	5 - Alternated poles with cut extremities	250 V	150 V	176 V
Impulse withstand voltage		6000 V		
Protection		IP20	NEMA 1	

All the main technical data are indicative "manufacturer" values.

RoHS
RoHS

5

Mounting instructions

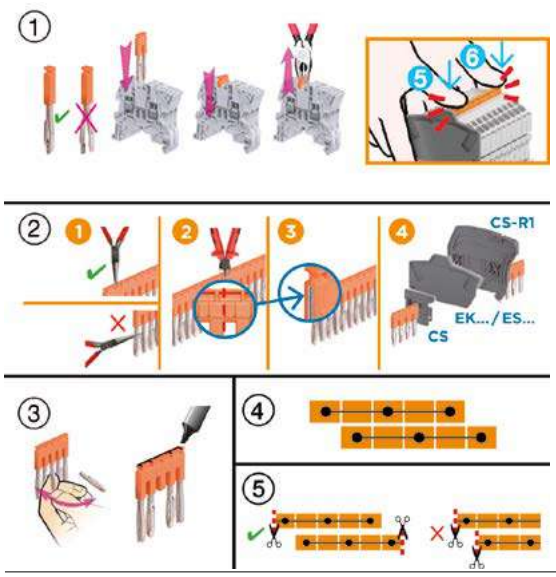

1 - Standard use

2 - Cut extremities

For voltage rating > 50 V and Uimp > 2.5 KV, the below accessories must be installed on the cut side of the jumper to guarantee IP20 and voltage rating:

ZS...	Feed-through	CS circuit separator
	Double deck / triple deck	ES... end section
ZK...	All functions	EK... end section

Ensure a good straight cut by positioning the cutting tool on the vertical snicks of the insulated part of the jumper.

3 - Cut poles

4 - Alternated poles

5 - Alternated poles with cut extremities

When using cut jumpers, cut extremities should be placed oppositely to allow end sections / circuit separators placement at each cut extremities.

For all other applications, please consult us.

1SNK160071S0201

Technical data valid for copper conductors only.

JB85-3 cross spacing jumpers
Common terminal block accessories

JB85

8 mm 0.315 in spacing

Description

- Allows power distribution between terminal blocks with different spacing,
- JB5-3, JB6-3 and JB8-3 can be used as cross spacing jumpers (see selection table on mounting instructions below).

Ordering details

Description		Color	Type	Part Number		Pkg qty	Weight (1 pce) g
Cross spacing jumpers	3 poles	Orange	JB85-3	1SNK900603R0000		10	2.80

Main technical data

Material specifications	Insulating material	Polyamide	
	Flammability	V0	
	NF F 16 101	I2F3	
Ambient temperature min/max	Service IEC 60068-2-1	-55 ... +110 °C	-67 ... +230 °F
	Storage	-55 ... +110 °C	-67 ... +230 °F
	Installing	-5 ... +40 °C	+23 ... +104 °F

		IEC	UL - CSA	Ex e
Rated current		32 A	30 A	
Rated voltage	Standard use	1000 V	600 V	Please consult
	Cut extremities	800 V	300 V	our dedicated
	Cut poles	630 V	300 V	certificates
Impulse withstand voltage		8000 V		
Protection		IP20	NEMA 1	

All the main technical data provided are "manufacturer" values

RoHS
RoHS

Mounting instructions

Cross spacing jumper selection between A and B terminal blocks with different spacing.

A \ B	5.2 mm	6 mm	8 mm
6 mm	JB5.3	-	-
8 mm	JB85.3	JB85.3	-
10 mm	JB85.3	JB85.3	JB8.3
12 mm	JB85.3	JB6.3	-

Yellow cell: for ZS and ZK terminal blocks

Blue cell: for ZS terminal blocks only

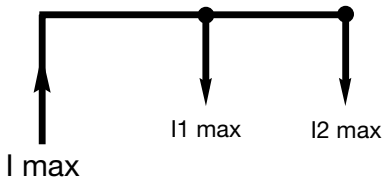

I1 max + I2 max ≤ I max

I max
I1 max ≤ I rated terminal block
I2 max

1SNK160054S0201

Technical data valid for copper conductors only.

TP

7.6 mm 0.299 in spacing

Mounting instructions

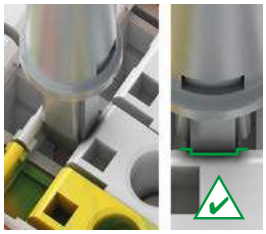

TP2 test adapters

Description

- Insulated test adapter that enables individual voltage control,
- Direct plug-in solution into the jumpers channels,
- Compatible with standard isolated or non isolated test plugs DIA 2 mm 0.079 in and 2.3 mm 0.090 in,
- Withstand more than 10000 operations according to TE Connectivity test standards.

Ordering details

Description	Color	Type	Part Number	Pkg qty	Weight (1 pce) g
For test plugs DIA 2 mm 0.079 in	Dark grey	TP2	1SNK900203R0000	20	1.70

Main technical data

Material specifications	Insulating material	Polyamide		
	Flammability	V0		
	NF F 16 101	I2F2		
Ambient temperature min/max	Service IEC 60068-2-1	-55 ... +110 °C	-67 ... +230 °F	
	Storage	-55 ... +110 °C	-67 ... +230 °F	
	Installing	-5 ... +40 °C	+23 ... +104 °F	
		IEC	**UL - CSA**	**Ex e**
Rated current		10 A		
Rated voltage	Standard use	1000 V	600 V	Not authorized
Impulse withstand voltage		8000 V		
Protection		IP20	NEMA 1	

All the main technical data provided are "manufacturer" values

RoHS
RoHS

TP

7.6 mm 0.299 in spacing

Mounting instructions

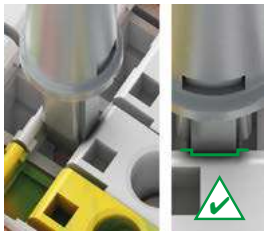

TP4 test adapters

Description

- Isolated test adapter that enables individual voltage control,
- Direct plug-in solution into the jumpers channels,
- Compatible with standard insulated or non isolated test plugs DIA 4 mm 0.157 in,
- Withstand more than 10000 operations according to TE Connectivity test standards.

Ordering details

Description	Color	Type	Part Number	Pkg qty	Weight (1 pce) g
For test plugs DIA 4 mm 0.157 in	Dark grey	TP4	1SNK900205R0000	20	2.40

Main technical data

Material specifications	Insulating material	Polyamide		
	Flammability	V0		
	NF F 16 101	I2F2		
Ambient temperature min/max	Service IEC 60068-2-1	-55 ... +110 °C	-67 ... +230 °F	
	Storage	-55 ... +110 °C	-67 ... +230 °F	
	Installing	-5 ... +40 °C	+23 ... +104 °F	
		IEC	**UL - CSA**	**Ex e**
Rated current		16 A		
Rated voltage	Standard use	1000 V	600 V	Not authorized
Impulse withstand voltage		8000 V		
Protection		IP20	NEMA 1	

All the main technical data provided are "manufacturer" values

RoHS
RoHS

1SNK160036S0201

Technical data valid for copper conductors only.

TC5 test connectors
Common terminal block accessories

5.2 mm 0.205 in spacing

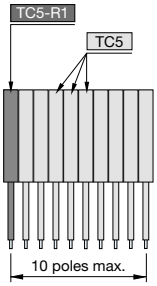

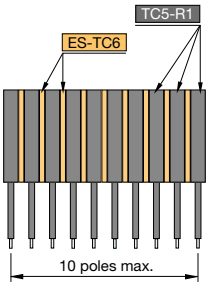

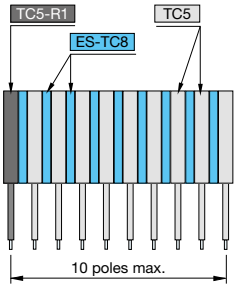

PT-3

Description

Ease the testing of terminal block assemblies:

- Make your own test connector assembly with our modular solution mixing various spacings,
- Direct plug-in solution into the jumpers channels,
- Withstand more than 10000 operations according to TE Connectivity test standards.

Main technical data

Connecting capacity		IEC	UL - CSA
1 conductor per clamp	Rigid - Solid / Stranded	0.2 ... 1.5 mm²	
	Flexible	0.22 ... 1.5 mm²	
	with non insulated ferrule		
	with insulated ferrule	0.22 ... 1.5 mm²	
	Gauge	A1-B1	
2 conductors per clamp	Rigid - Solid / Stranded	0.2 ... 0.75 mm²	
	Flexible	0.22 ... 0.75 mm²	
	with twin ferrule	0.22 ... 0.75 mm²	
Rated current / Rated cross section		16 A / 1.5 mm²	
Rated short-time withstand current (1s)		180 A	
Rated voltage		1000 V	
Impulse withstand voltage		8000 V	
Protection		IP20	NEMA 1

Mounting instructions

Rail		
Wire stripping length		8 mm 0.314 in
Tool		Flat screwdriver Ø 2.5 mm Ø 0.098 in
Torque		0.5 Nm ± 0.1 3.43 lb.in ± 0.885

The connecting capacity data for one Rigid - Solid / Stranded - Flexible conductor (when applicable) is a mandatory information required by IEC, UL and CSA standards (Copper conductors). All other data are provided as supplementary information only. For more details, please consult our CB, UL or CSA certificates and technical datasheet available on http://www.TE.com

Material specifications	Insulating material	Polyamide	
	Flammability	V0	
	NF F 16 101	I2F2	
Ambient temperature min/max	Service IEC 60068-2-1	-55 ... +110 °C	-67 ... +230 °F
	Storage	-55 ... +110 °C	-67 ... +230 °F
	Installing	-5 ... +40 °C	+23 ... +104 °F

All the main technical data provided are "manufacturer" values

RoHS
RoHS

Ordering details

Test connectors for 5.2 mm 0.205 in spacing terminal blocks

Description		Color	Type	Part Number		Pkg qty	Weight (1 pce) g
Test connectors	5.2 mm 0.205 in spacing	Dark grey	TC5	1SNK900200R0000		10	5.20
	End module, 5.2 mm 0.205 in		TC5-R1	1SNK900201R0000		10	5.20

Ordering details

Test connectors for 6 mm 0.236 in spacing terminal blocks

Description		Color	Type	Part Number		Pkg qty	Weight (1 pce) g
Test connectors	End module, 5.2 mm 0.205 in	Dark grey	TC5-R1	1SNK900201R0000		10	5.20
Spacers	0.8 mm 0.031 in spacing		ES-TC6	1SNK900105R0000		10	0.80

Ordering details

Test connectors for 8 mm 0.315 in spacing terminal blocks

Description		Color	Type	Part Number		Pkg qty	Weight (1 pce) g
Test connectors	5.2 mm 0.205 in spacing	Dark grey	TC5	1SNK900200R0000		10	5.20
	End module, 5.2 mm 0.205 in		TC5-R1	1SNK900201R0000		10	5.20
Spacers	2.8 mm 0.110 in spacing		ES-TC8	1SNK900104R0000		10	1.40

Accessories

Description		Color	Type	Part Number		Pkg qty	Weight (1 pce) g
Cable clamps	Fit on two C2.5-ZDP plugs and on TC5 test connectors	Dark grey	PT-3	1SNK900625R0000		20	1.00
Terminal block markers	Blank marker	White	MG-CPM 13 41790	1SNB041790R0512		1960	0.23
	Blank card		MC512	1SNK140000R0000		22	9.00
			MC512PA	1SNK149999R0000		20	10.00
	Universal wire markers holder	Grey	UMH	1SNK900611R0000		10	0.20

Technical data valid for copper conductors only.

1SNK160042S0201

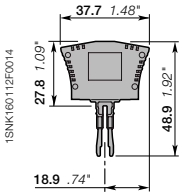

PG5

9.95 mm 0.392 in spacing

Mounting instructions

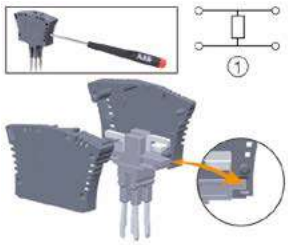

- Open the PG5-R2 with a flat screw-driver DIA . 3.5 mm 0.138 in,
- Use a soldering iron to fix your component,
- Close the PG5-R2,
- Plug-in in the terminal blocks jumper channels.

PG5-R2 component plugs

Description

- Component holder compatible with 5.2 mm 0.205 in spacing ZS4 feed-through terminal blocks,
- Fit components 16 x 16 x 8.5 mm 0.630 x 0.630 x 0.335 in (not supplied with plug) such as resistors, diodes, varistance,
- Direct plug-in into the terminal blocks jumper channels,
- Maximum dissipated power: 2 W.

Ordering details

Description	Color	Type	Part Number	Pkg qty	Weight (1 pce) g
Components insertion between 2 blocks	Dark grey	PG5-R2	1SNK900403R0000	20	8.00

Main technical data

Material specifications	Insulating material	Polyamide	
	Flammability	V0	
	NF F 16 101	I2F2	
Ambient temperature min/max	Service IEC 60068-2-1	-55 ... +110 °C	-67 ... +230 °F
	Storage	-55 ... +110 °C	-67 ... +230 °F
	Installing	-5 ... +40 °C	+23 ... +104 °F

	IEC	UL - CSA
Rated current		
Rated voltage	250 V	
Impulse withstand voltage	4000 V	
Protection	IP20	NEMA 1

All the main technical data provided are "manufacturer" values

RoHS
RoHS

Accessories

Description		Color	Type	Part Number	Pkg qty	Weight (1 pce) g
Terminal block markers		White	MG-CPM 13 41790	1SNB041790R0512	1960	0.23
Blank card	In polycarbonate		MC512	1SNK140000R0000	22	9.00
	Blank card		MC512PA	1SNK149999R0000	20	10.00
Universal wire markers holder	5.2 mm 0.205 in spacing	Grey	UMH	1SNK900611R0000	10	0.20

5

1SNK160039S0201

Technical data valid for copper conductors only.

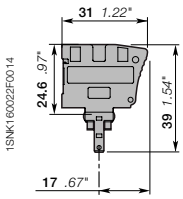

PG5

5.2 mm 0.205 in spacing

Mounting instructions

– Direct plug-in in disconnect with plug terminal block

PG5 component plugs

Description

– Ease the components installation (components not supplied with plug) with our quick plug-in mounting system which avoids soldering process,
– Accept 8.8 x 3.2 mm 0.346 x 0.125 in components such as resistors, diodes or subminiature fuses (fully encapsulated),
– Maximum dissipated power: 1 W.

Ordering details

Description	Color	Type	Part Number	Pkg qty	Weight (1 pce) g
Components in series with circuit	Dark grey	PG5	1SNK900401R0000	20	3.50

Main technical data

Material specifications	Insulating material	Polyamide	
	Flammability	V0	
	NF F 16 101	I2F2	
Ambient temperature min/max	Service IEC 60068-2-1	-55 ... +110 °C	-67 ... +230 °F
	Storage	-55 ... +110 °C	-67 ... +230 °F
	Installing	-5 ... +40 °C	+23 ... +104 °F

	IEC	UL - CSA
Rated current		
Rated voltage	400 V	150 V
Impulse withstand voltage	6000 V	
Protection	IP20	NEMA 1

All the main technical data provided are "manufacturer" values

RoHS
RoHS

Accessories

Description		Color	Type	Part Number	Pkg qty	Weight (1 pce) g
Terminal block markers		White	MG-CPM 13 41790	1SNB041790R0512	1960	0.23
Blank card	In polycarbonate		MC512	1SNK140000R0000	22	9.00
	Blank card		MC512PA	1SNK149999R0000	20	10.00
Universal wire markers holder	5.2 mm 0.205 in spacing	Grey	UMH	1SNK900611R0000	10	0.20

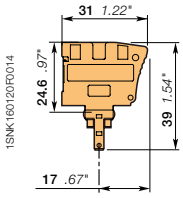

PG5

5.2 mm 0.205 in spacing

Mounting instructions

– PG5-R1 totally inserted: closed circuit,
– PG5-R1 inserted in central position: open circuit, plug secured in isolated central position

PG5-R1 disconnect plugs

Description

Allow disconnect function when associated with the disconnect with plug terminal blocks.

Ordering details

Description	Color	Type	Part Number	Pkg qty	Weight (1 pce) g
Equipped with linking bar	Orange	PG5-R1	1SNK900402R0000	20	3.50

Main technical data

Material specifications	Insulating material	Polyamide	
	Flammability	V0	
	NF F 16 101	I2F3	
Ambient temperature min/max	Service IEC 60068-2-1	-55 ... +110 °C	-67 ... +230 °F
	Storage	-55 ... +110 °C	-67 ... +230 °F
	Installing	-5 ... +40 °C	+23 ... +104 °F

	IEC	UL - CSA
Rated current	18 A	20 A
Rated voltage	400 V	150 V
Impulse withstand voltage	6000 V	
Protection	IP20	NEMA 1

All the main technical data provided are "manufacturer" values

RoHS
RoHS

Accessories

Description		Color	Type	Part Number	Pkg qty	Weight (1 pce) g
Terminal block markers		White	MG-CPM 13 41790	1SNB041790R0512	1960	0.23
Blank card	In polycarbonate		MC512	1SNK140000R0000	22	9.00
	Blank card		MC512PA	1SNK149999R0000	20	10.00
Universal wire markers holder	5.2 mm 0.205 in spacing	Grey	UMH	1SNK900611R0000	10	0.20

Technical data valid for copper conductors only.

1SNK160037S0201

1SNK160242F0014

TO

TO screwdrivers

Description

Flat head screwdriver

Ordering details

Description	Color	Type	Part Number		Pkg qty	Weight (1 pce) g
Insulated screwdriver 1000V IEC dimensions 3.5 x 100 mm 0.138 x 3.94 in		TO3.5-100-INS	1SNK900644R0000		1	37.00
screwdriver 3.5 x 50 mm 0.138 x 1.97 in		TO3.5-50	1SNK900640R0000		12	22.00
screwdriver 3.5 x 50 mm 0.138 x 1.97 in Angled 60°		TO3.5-50-A	1SNK900659R0000		12	21.6
screwdriver 4 x 100 mm 0.157 x 3.94 in		TO4-100	1SNK900641R0000		1	42.00
screwdriver 5.5 x 125 mm 0.216 x 4.92 in		TO5.5-125	1SNK900642R0000		1	75.50
screwdriver 6.5 x 150 mm 0.256 x 5.90 in		TO6.5-150	1SNK900643R0000		1	121.00

1SNK160127F0014

PS

PS crimping tools

Description

- Crimp flexible conductors equipped with ferrules from 0.08 to 10 mm² 28 AWG to 7 AWG,
- Semi-automatic crimping tool.

Ordering details

Description	Color	Type	Part Number		Pkg qty	Weight (1 pce) g
180 mm 7.09 in length		PS-3	1SNK900650R0000		1	380.00

1SNK160028S0201

Technical data valid for copper conductors only.

1SNK160233V0014

EK2.5

EK2.5 end sections

Description

- Unique dark grey color that fits all terminal blocks colours and ease the identification of circuits within your terminal block assemblies,
- Compatible with ZK2.5, ZK2.5-PE, ZK4, ZK4-PE, ZK6 and ZK6-PE PI-Spring screwless terminal blocks.

Ordering details

Description	Color	Type	Part Number		Pkg qty	Weight (1 pce) g
2 mm 0.079 in spacing	Dark grey	EK2.5	1SNK705910R0000		20	1.80

1SNK160234V0014

EK2.5-3P

EK2.5-3P end sections

Description

- Unique dark grey color that fits all terminal blocks colours and ease the identification of circuits within your terminal block assemblies,
- Compatible with ZK2.5-3P, ZK2.5-PE-3P, ZK4-3P, ZK4-PE-3P, ZK2.5-S..., ZK2.5-SP and ZK2.5-SF... PI-Spring screwless terminal blocks.

Ordering details

Description	Color	Type	Part Number		Pkg qty	Weight (1 pce) g
2 mm 0.079 in spacing	Dark grey	EK2.5-3P	1SNK705911R0000		20	2.40

1SNK160235V0014

EK2.5-4P

EK2.5-4P end sections

Description

- Unique dark grey color that fits all terminal blocks colours and ease the identification of circuits within your terminal block assemblies,
- Compatible with ZK2.5-4P, ZK2.5-PE-4P, ZK4-4P and ZK4-PE-4P PI-Spring screwless terminal blocks.

Ordering details

Description	Color	Type	Part Number		Pkg qty	Weight (1 pce) g
2 mm 0.079 in spacing	Dark grey	EK2.5-4P	1SNK705912R0000		20	2.70

Main technical data

Material specifications	Insulating material	Polyamide	
	Flammability	V0	
	NF F 16 101	I2F2	
Ambient temperature min/max	Service IEC 60068-2-1	-55 ... +110 °C	-67 ... +230 °F
	Storage	-55 ... +110 °C	-67 ... +230 °F
	Installing	-5 ... +40 °C	+23 ... +104 °F

All the main technical data provided are "manufacturer" values.

RoHS
RoHS

Technical data valid for copper conductors only.

1SNK160064S0201

1SNK160339V0014

EK2.5-S-4P

EK2.5-S-4P end sections

Description

– Unique dark grey color that fits all terminal blocks colours and ease the identification of circuits within your terminal block assemblies,
– Compatible with ZK2.5-S-4P, ZK2.5-SP-4P, ZK2.5-CH-4P... PI-Spring screwless terminal blocks.

Ordering details

Description	Color	Type	Part Number		Pkg qty	Weight (1 pce) g
2 mm 0.079 in spacing	Dark grey	EK2.5-S-4P	1SNK705913R0000		20	2.94

1SNK160237V0014

EK2.5-D2

EK2.5-D2 end sections

Description

– Compatible with ZK2.5-D2, ZK2.5-D2-PE, ZK2.5-D1 and ZK2.5-D1-PE PI-Spring screwless terminal blocks.

Ordering details

Description	Color	Type	Part Number		Pkg qty	Weight (1 pce) g
2 mm 0.079 in spacing	Dark grey	EK2.5-D2	1SNK705960R0000		20	3.40

1SNK160346V0014

EK2.5-T3

EK2.5-T3 end sections

Description

– Compatible with ZK2.5-T3, ZK2.5-T1, ZK2.5-T1-PE, ZK2.5-L-L-PE and ZK2.5-L-N-PE PI-Spring screwless terminal blocks.

Ordering details

Description	Color	Type	Part Number		Pkg qty	Weight (1 pce) g
0.8 mm 0.031 in spacing	Dark grey	EK2.5-T3	1SNK705961R0000		20	4.76

5

Main technical data

Material specifications	Insulating material	Polyamide	
	Flammability	V0	
	NF F 16 101	I2F2	
Ambient temperature min/max	Service IEC 60068-2-1	-55 ... +110 °C	-67 ... +230 °F
	Storage	-55 ... +110 °C	-67 ... +230 °F
	Installing	-5 ... +40 °C	+23 ... +104 °F

All the main technical data provided are "manufacturer" values.

RoHS
RoHS

Technical data valid for copper conductors only.

1SNK160065S0201

1SNK160236V0014

EK6-3P

EK6-3P end sections

Description

– Compatible with ZK6-3P and ZK6-PE-3P PI-Spring screwless terminal blocks.

Ordering details

Description	Color	Type	Part Number		Pkg qty	Weight (1 pce) g
2 mm 0.079 in spacing	Dark grey	EK6-3P	1SNK708911R0000		20	2.80

1SNK160238V0014

EK10

EK10 end sections

Description

– Compatible with ZK10, ZK10-PE, ZK16 and ZK16-PE PI-Spring screwless terminal blocks.

Ordering details

Description	Color	Type	Part Number		Pkg qty	Weight (1 pce) g
2 mm 0.079 in spacing	Dark grey	EK10	1SNK710910R0000		20	3.30

1SNK160318V0014

EK10-3P

EK10-3P end sections

Description

– Unique dark grey color that fits all terminal blocks colours and ease the identification of circuits within your terminal block assemblies,
– Compatible with ZK10-3P, ZK10-PE-3P, ZK16-3P, ZK16-PE-3P... PI-Spring screwless terminal blocks.

Ordering details

Description	Color	Type	Part Number		Pkg qty	Weight (1 pce) g
2 mm 0.079 in spacing	Dark grey	EK10-3P	1SNK710911R0000		20	4.5

5

Main technical data

Material specifications	Insulating material	Polyamide	
	Flammability	V0	
	NF F 16 101	I2F2	
Ambient temperature min/max	Service IEC 60068-2-1	-55 ... +110 °C	-67 ... +230 °F
	Storage	-55 ... +110 °C	-67 ... +230 °F
	Installing	-5 ... +40 °C	+23 ... +104 °F

All the main technical data provided are "manufacturer" values.

RoHS
RoHS

Technical data valid for copper conductors only.

1SNK160095S0201

CS-R2

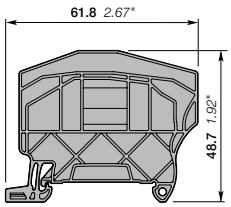

3 mm 0.118 in spacing

CS-R2 circuit separators

Description

- Compact circuits separator solution (only 3mm spacing) which provides a convenient visual identification of the several circuits within terminal assemblies,
- Unique top marking possibility that can replace the conventional solution of "end stop with label holder" for demanding applications with high space constraints, - Compatible with all PI-spring feed-through and ground terminal blocks up to 8 mm spacing,
- Mounting on DIN3-TH35 rail.

Ordering details

Description	Color	Type	Part Number		Pkg qty	Weight (1 pce) g
3 mm 0.118 in spacing	Dark grey	CS-R2	1SNK900106R0000		20	3.80

Main technical data

Material specifications	Insulating material	Polyamide	
	Flammability	V0	
	NF F 16 101	I2F2	
Ambient temperature min/max	Service IEC 60068-2-1	-55 ... +110 °C	-67 ... +230 °F
	Storage	-55 ... +110 °C	-67 ... +230 °F
	Installing	-5 ... +40 °C	+23 ... +104 °F

All the main technical data provided are "manufacturer" values

RoHS
RoHS

Accessories

Description		Color	Type	Part Number		Pkg qty	Weight (1 pce) g
Terminal block markers		White	MG-CPM 13 41791	1SNB041791R0612		1680	0.27
Labels		Yellow	MG-VYT 46415	1SNB046415R0615		5250	0.04
		White	MG-VYT 46915	1SNB046915R0615		5250	0.05
Blank card	In polycarbonate	White	MC612	1SNK150000R0000		22	10.00
	Blank card		MC612PA	1SNK159999R0000		20	11.00
Universal wire markers holder	5.2 mm 0.205 in spacing	Grey	UMH	1SNK900611R0000		10	0.20

5

1SNK160072S0201

Technical data valid for copper conductors only.

CS-R3

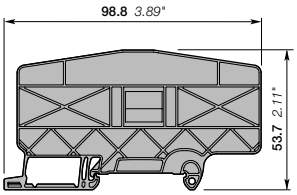

3 mm 0.118 in spacing

CS-R3 circuit separators

Description

- Compact circuits separator solution (only 3mm spacing) which provides a convenient visual identification of the several circuits within terminal assemblies,
- Unique top marking possibility that can replace the conventional solution of "end stop with label holder" for demanding applications with high space constraints,
- Compatible with all single deck PI-spring terminal blocks and ZS10-ST...terminal blocks ,
- Mounting on DIN3-TH35 rail.

Ordering details

Description	Color	Type	Part Number	Pkg qty	Weight (1 pce) g
3 mm 0.118 in spacing	Dark grey	CS-R3	1SNK900107R0000	20	6.40

Main technical data

Material specifications	Insulating material	Polyamide	
	Flammability	V0	
	NF F 16 101	I2F2	
Ambient temperature min/max	Service IEC 60068-2-1	-55 ... +110 °C	-67 ... +230 °F
	Storage	-55 ... +110 °C	-67 ... +230 °F
	Installing	-5 ... +40 °C	+23 ... +104 °F

All the main technical data provided are "manufacturer" values

RoHS
RoHS

Accessories

Description		Color	Type	Part Number	Pkg qty	Weight (1 pce) g
Terminal block markers		White	MG-CPM 13 41790	1SNB041790R0512	1960	0.23
			MG-CPM 13 41791	1SNB041791R0612	1680	0.27
Labels		Yellow	MG-VYT 46415	1SNB046415R0615	5250	0.04
		White	MG-VYT 46915	1SNB046915R0615	5250	0.05
Blank card	In polycarbonate	White	MC512	1SNK140000R0000	22	9.00
	Blank card		MC512PA	1SNK149999R0000	20	10.00
	In polycarbonate		MC612	1SNK150000R0000	22	10.00
	Blank card		MC612PA	1SNK159999R0000	20	11.00
Universal wire markers holder	5.2 mm 0.205 in spacing	Grey	UMH	1SNK900611R0000	10	0.20

Technical data valid for copper conductors only.

SHBP/SHB

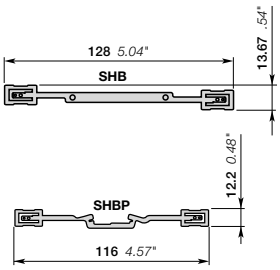

SHBP/SHB shield connectors for PI-Spring terminal blocks

Description

– Ensure the continuity of your shield connection,
– Various connection solutions available: RILS cable ties, soldering, quick-connect.

Ordering details

Description	Color	Type	Part Number		Pkg qty	Weight (1 pce) g
Compatible with ZK2.5 and ZK2.5-S terminal blocks		SHBP	1SNK900601R0000		20	4.10
Compatible with ZS and ZK double deck terminal blocks		SHB	1SNK900602R0000		20	4.90

Main technical data

Material specifications	Insulating material					
	Flammability					
	NF F 16 101					
Ambient temperature min/max	Service IEC 60068-2-1	-55 ... +110 °C	-67 ... +230 °F			
	Storage	-55 ... +110 °C	-67 ... +230 °F			
	Installing	-5 ... +40 °C	+23 ... +104 °F			

SHBP	IEC	UL - CSA	Ex e
Rated voltage	100 V		50 V

All the main technical data provided are "manufacturer" values

RoHS
RoHS

Accessories for screw clamp and PI-Spring terminal blocks

Description		Color	Type	Part Number		Pkg qty	Weight (1 pce) g
Cable ties	For SNK shield connector		RILS	1SNK900627R0000		10	0.30

Mounting instructions

– SHBS is directly fixed on the terminal block,
– SHB is fixed on the ES4-D2 end section,
– SHBP is directly fixed on the terminal block,
– Connect the cable shielding on the shielding connector with:
– RILS cable ties,
– quick-connect (the shield connector needs to be prepared),
– soldering iron.

1SNK160044S0201

Technical data valid for copper conductors only.

ES4

ES4 end sections

Description

- Unique dark grey color that fits all terminal blocks colours and ease the identification of circuits within your terminal block assemblies,
- Compatible with feed-through, ground and disconnect screw clamp terminal blocks.

Ordering details

Description	Color	Type	Part Number		Pkg qty	Weight (1 pce) g
2.2 mm 0.087 in spacing	Dark grey	ES4	1SNK505910R0000		20	2.20

ES6-3S

ES6-3S end sections

Description

- Compatible with ZS6-3S and ZS6-3S-PE terminal blocks.

Ordering details

Description	Color	Type	Part Number		Pkg qty	Weight (1 pce) g
2.2 mm 0.087 in spacing	Dark grey	ES6-3S	1SNK505912R0000		20	2.50

ES6-4S

ES6-4S end sections

Description

- Compatible with ZS6-4S, ZS6-4S-PE, ZS6-S-4S-T2 and ZS4-PE-R2 terminal blocks.

Ordering details

Description	Color	Type	Part Number		Pkg qty	Weight (1 pce) g
2.2 mm 0.087 in spacing	Dark grey	ES6-4S	1SNK505911R0000		20	3.10

ES4-D2

ES4-D2 end sections

Description

- Unique dark grey color that fits all terminal blocks colours and ease the identification of circuits within your terminal block assemblies,
- Compatible with double deck screw clamp terminal blocks

Ordering details

Description	Color	Type	Part Number		Pkg qty	Weight (1 pce) g
2.55 mm 0.100 in spacing	Dark grey	ES4-D2	1SNK505960R0000		20	4.10

Main technical data

Material specifications	Insulating material	Polyamide	
	Flammability	V0	
	NF F 16 101	I2F2	
Ambient temperature min/max	Service IEC 60068-2-1	-55 ... +110 °C	-67 ... +230 °F
	Storage	-55 ... +110 °C	-67 ... +230 °F
	Installing	-5 ... +40 °C	+23 ... +104 °F

All the main technical data provided are "manufacturer" values.

RoHS
RoHS

Technical data valid for copper conductors only.

1SNK160061S0201

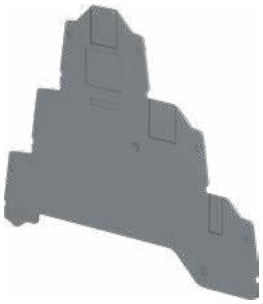

ES4-T3

ES4-T3 end sections

Description

– Compatible with ZS4-T3 terminal block.

Ordering details

Description	Color	Type	Part Number		Pkg qty	Weight (1 pce) g
0.8 mm 0.031 in spacing	Dark grey	ES4-T3	1SNK505961R0000		20	4.20

ES4-SF

ES4-SF end sections

Description

– Compatible with fuse ZS4-SF1... and disconnect screw clamp terminal blocks ZS4-S-R3.

Ordering details

Description	Color	Type	Part Number		Pkg qty	Weight (1 pce) g
1.5 mm 0.059 in spacing	Dark grey	ES4-SF	1SNK508960R0000		20	1.80

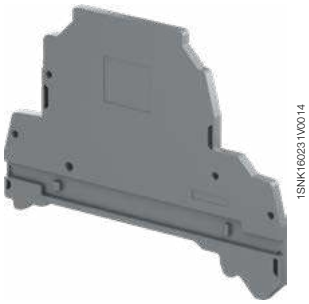

ES4-D2-SF1

ES4-D2-SF1 end sections

Description

– Compatible with ZS4-D2-SF1 ... terminal blocks.

Ordering details

Description	Color	Type	Part Number		Pkg qty	Weight (1 pce) g
2.5 mm 0.098 in spacing	Dark grey	ES4-D2-SF1	1SNK508911R0000		20	5.00

ES10-ST

ES10-ST end sections

Description

– Unique dark grey color that fits all test disconnect terminal blocks ZS10-ST... and ease the identification of circuits within your terminal block assemblies,
– Also compatible with ZS10-R1 and ZS10-PE-R1.

Ordering details

Description	Color	Type	Part Number		Pkg qty	Weight (1 pce) g
2 mm 0.079 in spacing	Dark grey	ES10-ST	1SNK508910R0000		20	3.5

Accessories

Description		Color	Type	Part Number		Pkg qty	Weight (1 pce) g
Circuit separators	0 mm 0 in spacing	Dark grey	CS	1SNK900101R0000		20	0.20

Main technical data

Material specifications	Insulating material	Polyamide	
	Flammability	V0	
	NF F 16 101	I2F2	
Ambient temperature min/max	Service IEC 60068-2-1	-55 ... +110 °C	-67 ... +230 °F
	Storage	-55 ... +110 °C	-67 ... +230 °F
	Installing	-5 ... +40 °C	+23 ... +104 °F

All the main technical data provided are "manufacturer" values.

RoHS
RoHS

Technical data valid for copper conductors only.

1SNK160062S0201

JB8

8 mm 0.315 in spacing

Mounting instructions

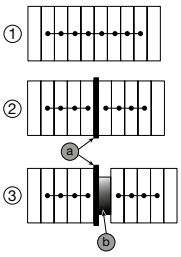

1 - Rated voltage: 160 V (IEC) / Not authorized (UL)
2 - Rated voltage: 320 V (IEC) / Not authorized (UL)
3 - Rated voltage: 1000 V (IEC) / 300 V (UL)
a - End section ES10-ST
b - End stop BAZ1

JB8 jumper bars

Description

Insulated jumper bar with screw mounting.

Ordering details

Description		Color	Type	Part Number		Pkg qty	Weight (1 pce) g
8 mm 0.315 in spacing	2 poles	Orange	JB8-2-R1	1SNK908902R0000		10	7.6
	3 poles		JB8-3-R1	1SNK908903R0000		10	11.6
	4 poles		JB8-4-R1	1SNK908904R0000		10	15.5
	5 poles		JB8-5-R1	1SNK908905R0000		10	19.4
	10 poles		JB8-10-R1	1SNK908910R0000		10	39.00

Main technical data

Material specifications	Insulating material	Polyamide		Rail		
	Flammability	V0				
	NF F 16 101	I2F3		Tool		Flat screwdriver Ø 3.5 mm Ø 0.138 in
Ambient temperature min/max	Service IEC 60068-2-1	-55 ... +110 °C	-67 ... +230 °F			
	Storage	-55 ... +110 °C	-67 ... +230 °F			
	Installing	-5 ... +40 °C	+23 ... +104 °F	Torque		0.7 Nm ± 0.1 6.2 lb.in ± 0.88

		IEC	UL - CSA	Ex e
Rated current		50 A	51 A	
Rated voltage	Standard use	160 V		
	Alternated poles			Not authorized
Impulse withstand voltage				
Protection		IP20	NEMA 1	

All the main technical data provided are "manufacturer" values

RoHS
RoHS

Technical data valid for copper conductors only.

1SNK161061S0201

JB16

16 mm 0.630 in spacing

Mounting instructions

- With flat pliers, cut out the partitions on the terminal block insulating body. Be careful to not cut out the jumpered terminal blocks partitions at both ends of the assembly in order to maintain the IP20, Nema1 protection and insulation,
- Install the jumper bar with the recommended tool and torque.

JB22

22 mm 0.866 in spacing

Mounting instructions

- With flat pliers, cut out the partitions on the terminal block insulating body. Be careful to not cut out the jumpered terminal blocks partitions at both ends of the assembly in order to maintain the IP20, Nema1 protection and insulation,
- Install the jumper bar with the recommended tool and torque.

JB16 jumper bars

Description

Insulated jumper bar with screw mounting.

Ordering details

Description		Color	Type	Part Number		Pkg qty	Weight (1 pce) g
16 mm 0.630 in spacing	2 poles	Orange	JB16-2	1SNK916302R0000		10	10.00
	3 poles		JB16-3	1SNK916303R0000		10	16.00
	4 poles		JB16-4	1SNK916304R0000		10	22.00
	5 poles		JB16-5	1SNK916305R0000		10	28.00
	10 poles		JB16-10	1SNK916310R0000		10	56.60

Main technical data

Material specifications	Insulating material	Polyamide		Rail		
	Flammability	V0				
	NF F 16 101	I2F3		Tool		Flat screwdriver Ø 5.5 mm Ø 0.217 in
Ambient temperature min/max	Service IEC 60068-2-1	-55 ... +110 °C	-67 ... +230 °F			
	Storage	-55 ... +110 °C	-67 ... +230 °F			
	Installing	-5 ... +40 °C	+23 ... +104 °F	Torque		1.2 Nm ± 0.1 10.6 lb.in ± 0.885

		IEC	UL - CSA	Ex e
Rated current		125 A	150 A	
Rated voltage	Standard use	1000 V	600 V	
	Alternated poles			Not authorized
Impulse withstand voltage		8000 V		
Protection		IP20	NEMA 1	

All the main technical data provided are "manufacturer" values

RoHS
RoHS

JB22 jumper bars

Description

Screw jumper bars

Ordering details

Description		Color	Type	Part Number		Pkg qty	Weight (1 pce) g
22 mm 0.866 in spacing	2 poles		JB22-2	1SNK922302R0000		5	27.00
	3 poles		JB22-3	1SNK922303R0000		5	43.30
	5 poles		JB22-5	1SNK922305R0000		5	76.10
	10 poles		JB22-10	1SNK922310R0000		5	157.40

Main technical data

Material specifications	Insulating material	Polyamide		Rail		
	Flammability					
	NF F 16 101			Tool		Allen key Ø 4 mm Ø 0.157 in
Ambient temperature min/max	Service IEC 60068-2-1	-55 ... +110 °C	-67 ... +230 °F			
	Storage	-55 ... +110 °C	-67 ... +230 °F			
	Installing	-5 ... +40 °C	+23 ... +104 °F	Torque		2 Nm ± 0.4 17.7 lb.in ± 3.54

		IEC	UL - CSA	Ex e
Rated current		192 A	175 A	
Rated voltage	Standard use	1000 V	600 V	630 V
	Alternated poles			Not authorized
Impulse withstand voltage		8000 V		
Protection		IP20		

All the main technical data provided are "manufacturer" values

RoHS
RoHS

Technical data valid for copper conductors only.

1SNK160032S0201

1SNK160100F0014

JB26

26 mm 1.024 in spacing

Mounting instructions

- With flat pliers, cut out the partitions on the terminal block insulating body. Be careful to not cut out the jumpered terminal blocks partitions at both ends of the assembly in order to maintain the IP20, Nema1 protection and insulation,
- Install the jumper bar with the recommended tool and torque.

JB26 jumper bars

Description

Screw jumper bars

Ordering details

Description		Color	Type	Part Number		Pkg qty	Weight (1 pce) g
26 mm 1.02 in spacing	2 poles		JB26-2	1SNK926302R0000		5	41.20
	3 poles		JB26-3	1SNK926303R0000		5	65.70
	5 poles		JB26-5	1SNK926305R0000		5	115.70
	10 poles		JB26-10	1SNK926310R0000		5	241.50

Main technical data

Material specifications	Insulating material			Rail		
	Flammability					
	NF F 16 101			Tool		Allen key Ø 4 mm Ø 0.157 in
Ambient temperature min/max	Service IEC 60068-2-1	-55 ... +110 °C	-67 ... +230 °F			
	Storage	-55 ... +110 °C	-67 ... +230 °F			
	Installing	-5 ... +40 °C	+23 ... +104 °F	Torque		2 Nm ± 0.4 17.7 lb.in ± 3.54

		IEC	UL - CSA	Ex e
Rated current		232 A	230 A	
Rated voltage	Standard use	1000 V	600 V	630 V
	Alternated poles			Not authorized
Impulse withstand voltage		8000 V		
Protection		IP20		

All the main technical data provided are "manufacturer" values

RoHS
RoHS

Technical data valid for copper conductors only.

1SNK160034S0201

1SNK160100F0014

BJMI31

31 mm 1.22 in spacing

Mounting instructions

- With flat pliers, cut out the partitions on the terminal block insulating body. Be careful to not cut out the jumpered terminal blocks partitions at both ends of the assembly in order to maintain the IP20, Nema1 protection and insulation,
- Install the jumper bar with the recommended tool and torque.

BJMI31 jumper bars

Description

Screw jumper bars

Ordering details

Description		Color	Type	Part Number		Pkg qty	Weight (1 pce) g
31mm 1.220 in spacing	2 poles		BJMI31.2	1SNA206053R0700		1	120.00
	3 poles		BJMI31.3	1SNA206054R0000		1	190.00

Main technical data

Material specifications	Insulating material			Rail		
	Flammability					
	NF F 16 101			Tool		Allen key Ø 5 mm Ø 0.196 in
Ambient temperature min/max	Service IEC 60068-2-1	-55 ... +110 °C	-67 ... +230 °F			
	Storage	-55 ... +110 °C	-67 ... +230 °F			
	Installing	-5 ... +40 °C	+23 ... +104 °F	Torque		3 Nm ± 0.4 26.55 lb.in ± 3.54

		IEC	UL - CSA	Ex e
Rated current		309 A	445 A	
Rated voltage	Standard use	1000 V	600 V	
	Alternated poles			Not authorized
Impulse withstand voltage		8000 V		
Protection		IP20		

All the main technical data provided are "manufacturer" values

RoHS
RoHS

1SNK160100F0014

BJMI36

36 mm 1.42 in spacing

Mounting instructions

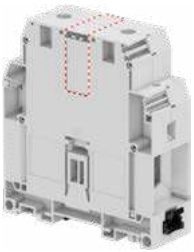

- With flat pliers, cut out the partitions on the terminal block insulating body. Be careful to not cut out the jumpered terminal blocks partitions at both ends of the assembly in order to maintain the IP20, Nema1 protection and insulation,
- Install the jumper bar with the recommended tool and torque.

BJMI36 jumper bars

Description

Screw jumper bars

Ordering details

Description		Color	Type	Part Number		Pkg qty	Weight (1 pce) g
36mm 1.41i7 n spacing	2 poles		BJMI36.2	1SNA206126R2500		1	170.00
	3 poles		BJMI36.3	1SNA206223R0600		1	260.00

Main technical data

Material specifications	Insulating material			Rail		
	Flammability					
	NF F 16 101			Tool		Allen key Ø 5 mm Ø 0.196 in
Ambient temperature min/max	Service IEC 60068-2-1	-55 ... +110 °C	-67 ... +230 °F			
	Storage	-55 ... +110 °C	-67 ... +230 °F			
	Installing	-5 ... +40 °C	+23 ... +104 °F	Torque		3 Nm ± 0.4 26.55 lb.in ± 3.54

		IEC	UL - CSA	Ex e
Rated current		415 A	620 A	
Rated voltage	Standard use	1000 V	600 V	
	Alternated poles			Not authorized
Impulse withstand voltage		8000 V		
Protection		IP20		

All the main technical data provided are "manufacturer" values

RoHS
RoHS

1SNK160097S0201

Technical data valid for copper conductors only.

1SNC160112F0014

PC8

8 mm 0.315 in spacing

Mounting instructions for ZS10-ST...

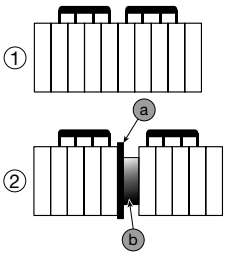

1 - Rated voltage: 630 V (IEC) / 150 V (UL)
2 - Rated voltage: 630 V (IEC) / 300 V (UL)
a - End section ES10-ST
b - End stop BAZ1

PC8 lateral jumper bars

Description

IP20 Comb jumper bars,

- direct insertion in the screw clamp before tightening the screws, above the eventual conductor (if conductor used with ferrule, we recommend the use of long ferrule for optimized mounting ergonomy with test disconnect terminal blocks),
- Multiple versions available in pre-cut poles for test disconnect terminal blocks applications.

Ordering details

Description		Color	Type	Part Number		Pkg qty	Weight (1 pce) g
Lateral jumper bars							
8 mm 0.315 in spacing	2 poles	Black ■	PC8-2	1SNA116538R1700		10	3.00
	3 poles		PC8-3	1SNA116539R1000		10	4.00
	4 poles		PC8-4	1SNA116540R2500		10	6.00
	10 poles		PC8-10	1SNA163313R2400		10	14.00
Lateral jumper bars pre-cut poles							
8 mm 0.315 in spacing	4/6 poles	Black ■	PC8-R1	1SNA400711R0600		10	6.60
	4/8 poles		PC8-R2	1SNA400712R0700		10	7.80
	4/10 poles		PC8-R3	1SNA400713R0000		10	9.00
	3/4 poles		PC8-R4	1SNA400724R0300		10	4.50
	4/7 poles		PC8-R5	1SNA400842R0000		10	6.60
	2/3 poles		PC8-R6	1SNA400843R0000		10	6.60
	4/6 poles		PC8-R7	1SNA400849R0000		10	6.60
	4/8 poles		PC8-R8	1SNA400850R0000		10	7.80

Main technical data

Material specifications	Insulating material	Polyamide	
	Flammability	V0	
	NF F 16 101	I2F3	
Ambient temperature min/max	Service IEC 60068-2-1	-55 ... +110 °C	-67 ... +230 °F
	Storage	-55 ... +110 °C	-67 ... +230 °F
	Installing	-5 ... +40 °C	+23 ... +104 °F

All the main technical data provided are "manufacturer" values

RoHS
RoHS

1SNC160537F0014

PC81

8 mm 0.315 in spacing

PC81 lateral jumper bars

Description

Comb-type jumper bar, allows the connection of consecutive blocks or not by one compression clamp connection.

Ordering details

Description		Color	Type	Part Number		Pkg qty	Weight (1 pce) g
8 mm 0.315 in spacing	10 poles	Grey □	PC81-10	1SNA173523R1100		10	5.00

Main technical data

Material specifications	Insulating material	Brass/polyamide	
	Flammability	V0	
	NF F 16 101	I2F3	
Ambient temperature min/max	Service IEC 60068-2-1	-55 ... +110 °C	-67 ... +230 °F
	Storage	-55 ... +110 °C	-67 ... +230 °F
	Installing	-5 ... +40 °C	-23 ... +104 °F

All the main technical data provided are "manufacturer" values

RoHS
RoHS

1SNK161060S0201

Technical data valid for copper conductors only.

CS

0 mm 0 in spacing

Mounting instructions

CS circuit separators

Description

- The CS circuit separator avoids the derating of terminal blocks when cut jumper bars JB are used,
- Compatible with feed-through terminal blocks up to 16 mm² 4 AWG,
- Without spacing loss.

Ordering details

Description	Color	Type	Part Number		Pkg qty	Weight (1 pce) g
0 mm 0 in spacing	Dark grey	CS	1SNK900101R0000		20	0.20

Main technical data

Material specifications	Insulating material	Polyamide	
	Flammability	V0	
	NF F 16 101	I2F2	
Ambient temperature min/max	Service IEC 60068-2-1	-55 ... +110 °C	-67 ... +230 °F
	Storage	-55 ... +110 °C	-67 ... +230 °F
	Installing	-5 ... +40 °C	+23 ... +104 °F

All the main technical data provided are "manufacturer" values

RoHS
RoHS

CS-R1

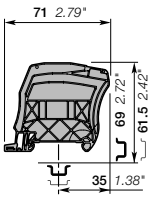

3 mm 0.118 in spacing

Mounting instructions

CS-R1 circuit separators

Description

- Ease the visual identification of the several circuits within your terminal block assemblies,
- Compatible with feed-through terminal blocks up to 35 mm² 0 AWG,
- Intermediate cover holder for CO protective cover,
- Mounting on DIN3-TH35 rail.

Ordering details

Description	Color	Type	Part Number		Pkg qty	Weight (1 pce) g
3 mm 0.118 in spacing	Dark grey	CS-R1	1SNK900103R0000		20	5.20

Main technical data

Material specifications	Insulating material	Polyamide	
	Flammability	V0	
	NF F 16 101	I2F2	
Ambient temperature min/max	Service IEC 60068-2-1	-55 ... +110 °C	-67 ... +230 °F
	Storage	-55 ... +110 °C	-67 ... +230 °F
	Installing	-5 ... +40 °C	+23 ... +104 °F

All the main technical data provided are "manufacturer" values

RoHS
RoHS

Accessories

Description		Color	Type	Part Number		Pkg qty	Weight (1 pce) g
Terminal block markers		White	MG-CPM 13 41790	1SNB041790R0512		1960	0.23
Blank card	In polycarbonate		MC512	1SNK140000R0000		22	9.00
	Blank card		MC512PA	1SNK149999R0000		20	10.00
Universal wire markers holder	5.2 mm 0.205 in spacing	Grey	UMH	1SNK900611R0000		10	0.20

Technical data valid for copper conductors only.

1SNK160018S0201

5

SHBS/SHB

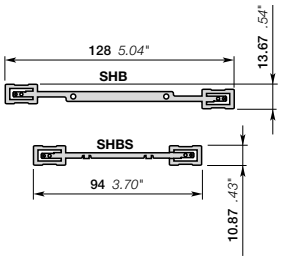

SHBS/SHB shield connectors

Description

- Ensure the continuity of your shield connection,
- Various connection solutions available: RILS cable ties, soldering, quick-connect.

Ordering details

Description		Color	Type	Part Number		Pkg qty	Weight (1 pce) g
Compatible with ZS feed-through terminal blocks			SHBS	1SNK900600R0000		20	3.50
Compatible with ZS and ZK double deck terminal blocks			SHB	1SNK900602R0000		20	4.90

Main technical data

Material specifications	Insulating material		
	Flammability		
	NF F 16 101		
Ambient temperature min/max	Service IEC 60068-2-1	-55 ... +110 °C	-67 ... +230 °F
	Storage	-55 ... +110 °C	-67 ... +230 °F
	Installing	-5 ... +40 °C	+23 ... +104 °F

SHBS	IEC	UL - CSA	Ex e
Rated voltage	320 V		125 V

All the main technical data provided are "manufacturer" values

RoHS
RoHS

Accessories for screw clamp and PI-Spring terminal blocks

Description		Color	Type	Part Number		Pkg qty	Weight (1 pce) g
Cable ties	For SNK shield connector		RILS	1SNK900627R0000		10	0.30

Mounting instructions

- SHBS is directly fixed on the terminal block,
- SHB is fixed on the ES4-D2 end section,
- SHBP is directly fixed on the terminal block,
- Connect the cable shielding on the shielding connector with:
- RILS cable ties,
- quick-connect (the shield connector needs to be prepared),
- soldering iron.

1SNK160079S0201

Technical data valid for copper conductors only.

PL protecting covers
Screw clamp terminal block accessories

PL

Mounting instructions

- The mounting of the PL does not require a screwdriver,
- The dismounting of the PL requires a screwdriver DIA .4 mm 0.160 in, the screwdriver must be positionned in the cover centered hole.

Description

- Prohibit access to the screw clamps,
- Indicate live circuits.

Ordering details

Description	Color	Type	Part Number		Pkg qty	Weight (1 pce) g
5.2 mm 0.205 in spacing	Transparent	PL5	1SNK900618R0000		10	1.50
6 mm 0.236 in spacing		PL6	1SNK900619R0000		10	1.80
8 mm 0.315 in spacing		PL8	1SNK900620R0000		10	2.60
10 mm 0.394 in spacing		PL10	1SNK900621R0000		10	3.10
16 mm 0.630 in spacing		PL16	1SNK900622R0000		10	4.60

Main technical data

Material specifications	Insulating material	Polycarbonate	
	Flammability	V2	
	NF F 16 101		
Ambient temperature min/max	Service IEC 60068-2-1	-55 ... +110 °C	-67 ... +230 °F
	Storage	-55 ... +110 °C	-67 ... +230 °F
	Installing	-5 ... +40 °C	+23 ... +104 °F

Mounting instructions

Tool		Flat screwdriver Ø 4 mm Ø 0.157 in

All the main technical data provided are "manufacturer" values

RoHS
RoHS

Technical data valid for copper conductors only.

5

1SNK160021S0201

CO

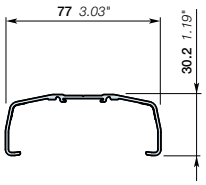

CO protecting covers

Description

- Restrict access to your assembly with the protecting cover CO installed with KCO mounting kit (2 end stops, 2 sealing accessories),
- Compatible with SNK feed-through terminal blocks up to 35 mm² 0 AWG.

Ordering details

Description	Color	Type	Part Number		Pkg qty	Weight (1 pce) g
1 m 39.4 in length	Transparent	CO	1SNK900604R0000		1	300.00

Main technical data

Material specifications	Insulating material	PVC				
	Flammability	V0				
	NF F 16 101					
Ambient temperature min/max	Service IEC 60068-2-1	-55 ... +80 °C	-67 ... +176 °F			
	Storage	-55 ... +80 °C	-67 ... +176 °F			
	Installing	-5 ... +40 °C	+23 ... +104 °F			

All the main technical data provided are "manufacturer" values

RoHS
RoHS

Accessories

Description		Color	Type	Part Number		Pkg qty	Weight (1 pce) g
Protecting cover kits	Mounting kit for cover CO	Dark grey	KCO	1SNK900624R0000		1	47.80
Label		White	PAM43020	1SNA235106R2600		20	27.00

Mounting instructions

Restrict access to the circuit by sealing the cover:
- Drill on the CO center line at 5 mm 0.197 in from the extremity with 5 mm 0.197 in diameter drill,
- Pass the sealing collar through the CO and KCO holes.

KCO

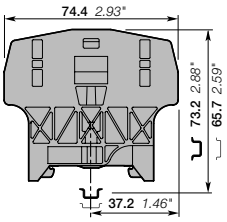

KCO protecting cover kits

Description

Mount your protecting cover with the KCO versatile mounting kit (2 end stops, 2 sealing accessories):
- Maintain the cover,
- Reliably seal the access to the terminal assembly if needed,
- Use it as well as an end stop.

Ordering details

Description	Color	Type	Part Number		Pkg qty	Weight (1 pce) g
Mounting kit for cover CO	Dark grey	KCO	1SNK900624R0000		1	47.80

Main technical data

Material specifications	Insulating material	Polyamide		Rail		G32, TH 35-7.5, TH 35-15, TH 15-5.5
	Flammability	V0				
	NF F 16 101			Tool		Flat screwdriver Ø 4 mm Ø 0.157 in
Ambient temperature min/max	Service IEC 60068-2-1	-55 ... +110 °C	-67 ... +230 °F			
	Storage	-55 ... +110 °C	-67 ... +230 °F			
	Installing	-5 ... +40 °C	+23 ... +104 °F			

All the main technical data provided are "manufacturer" values

RoHS
RoHS

Technical data valid for copper conductors only.

1SNK160045S0201

1SNK160221F0014

SC-JB8

8 mm 0.315 in spacing

SC-JB8 short circuit bridges

Description

- Allow safe short-circuiting of current Tranformers circuits,
- Insulated,
- Fully operated by screwdriver,
- Short circuited fixed position secured thanks to AJS9 tightening,
- Adapted hook shape maintains the bridge on the terminal block in the non short-circuited position,
- The orange version can be used as fixed jumpers.

Ordering details

Description		Color	Type	Part Number		Pkg qty	Weight (1 pce) g
8 mm 0.315 in spacing	2 poles	Yellow	SC-JB8-2	1SNK900652R0000		25	2.00
	3 poles		SC-JB8-3	1SNK900653R0000		25	3.4
	4 poles		SC-JB8-4	1SNK900654R0000		25	4.7
	3/5 poles		SC-JB8-5	1SNK900655R0000		25	4.7
	3 poles	Orange	SC-JB8-3-OR	1SNK900657R0000		25	
	4 poles		SC-JB8-4-OR	1SNK900658R0000		25	

Main technical data

Material specifications	Insulating material	Polyamide	
	Flammability	V0	
	NF F 16 101	I2F3	
Ambient temperature min/max	Service IEC 60068-2-1	-55 ... +110 °C	-67 ... +230 °F
	Storage	-55 ... +110 °C	-67 ... +230 °F
	Installing	-5 ... +40 °C	+23 ... +104 °F

All the main technical data provided are "manufacturer" values

RoHS
RoHS

5

1SNK161063S0201

Technical data valid for copper conductors only.

1SNC160482F0014

AJS

4 mm 0.157 in spacing

AJS test sockets

Description

– Insulated test sockets,
  - Many colors available for circuit identification,
  - Compatible with standard DIA 4 mm 0.157 in test plugs:
  - insulated (according to IEC 60101-031) - not insulated (with mobile protection),
  - Compatible with ZS10-ST…SNK series terminal blocks, M6/8.ST...SNA series terminal blocks, D6/8. ST.RS..Solution series terminal blocks

Ordering details

Description	Color	Type	Part Number		Pkg qty	Weight (1 pce) g
Test sockets DIA 4 mm 0.157 in	Grey	AJS9-GR	1SNA206682R0300		25	3.60
	Blue	AJS9-BL	1SNA206683R0400		25	3.60
	Yellow	AJS9	1SNA179726R0200		25	3.60
	Green	AJS9-GN	1SNA206681R0200		25	3.60
	Red	AJS9-RD	1SNA206720R1400		25	3.60
	Purple	AJS9-PR	1SNA206772R0000		25	3.60
	Brown	AJS9-BR	1SNA206782R0000		25	3.60
	White	AJS9-WH	1SNA206765R0000		25	3.60
	Black	AJS9-BK	1SNA206680R1500		25	3.60

Main technical data

Material specifications	Insulating material	Polyamide	
	Flammability	V0	
	NF F 16 101	I2F3	
Ambient temperature min/max	Service IEC 60068-2-1	-55 ... +110 °C	-67 ... +230 °F
	Storage	-55 ... +110 °C	-67 ... +230 °F
	Installing	-5 ... +40 °C	+23 ... +104 °F

Mounting instructions

Tool		Flat screwdriver Ø 3.5 mm Ø 0.138 in
Torque		0.5 Nm ± 0.1 4.42 lb.in ± 0.88

All the main technical data provided are "manufacturer" values

RoHS
RoHS

5

1SNK161064S0201

Technical data valid for copper conductors only.

EDK2.5-22

EDK2.5-22 end sections

Description

– Compatible with ZDK2.5-22 and ZDK4-22 pluggable terminal blocks.

Description	Color		Type	Part Number	Pkg qty	Weight 1 pce g
2.2 mm 0.087 in spacing	Dark grey	■	EDK2.5-22	1SNK805910R0000	20	3.08

EDK2.5-21

EDK2.5-21 end sections

Description

– Compatible with ZDK2.5-11, ZDK2.5-11-BL and ZDK2.5-11-PE pluggable terminal blocks.

Description	Color		Type	Part Number	Pkg qty	Weight 1 pce g
1.5 mm 0.059 in spacing	Dark grey	■	EDK2.5-21	1SNK805914R0000	20	1.90

EDK2.5-11

EDK2.5-11 end sections

Description

– Compatible with ZD2.5-11 pluggable terminal blocks.

Description	Color		Type	Part Number	Pkg qty	Weight 1 pce g
1.5 mm 0.059 in spacing	Dark grey	■	EDK2.5-11	1SNK805915R0000	20	1.49

EDK2.5-D

EDK2.5-D end sections

Description

– Compatible with ZDK2.5-D2, ZDK2.5-D2-BL, ZDK2.5-D1, ZDK2.5-D1-PE and ZDK2.5-D2-PE pluggable terminal blocks.

Description	Color		Type	Part Number	Pkg qty	Weight 1 pce g
2 mm 0.079 in spacing	Dark grey	■	EDK2.5-D	1SNK805913R0000	20	3.88

Main technical data

Material specifications	Insulating material	Polyamide	
	Flammability	V0	
	NF F 16 101	I2F2	
Ambient temperature min/max	Service IEC 60068-2-1	-55 ... +110 °C	-67 ... +230 °C
	Storage	-55 ... +110 °C	-67 ... +230 °C
	Installing	-5 ... +40 °C	+23 ... +104 °C

All the main technical data provided are "manufacturer" values.

RoHS
RoHS

Technical data valid for copper conductors only.

1SNK164033S0201

5

1SNK164028V0014

ED2.5-22

ED2.5-22 end sections

Description

– Compatible with ZD2.5-22 and ZD2.5-22-PE pluggable terminal blocks.

Ordering details

Description	Color	Type	Part Number		Pkg qty	Weight (1 pce) g
2 mm 0.079 in spacing	Dark grey	ED2.5-22	1SNK805917R0000		20	3.64

1SNK160302V0014

EDS4-22

EDS4-22 end sections

Description

– Compatible with ZDS4-22 pluggable terminal block.

Ordering details

Description	Color	Type	Part Number		Pkg qty	Weight (1 pce) g
0.8 mm 0.031 in spacing	Dark grey	EDS4-22	1SNK805911R0000		20	1.85

5

Main technical data

Material specifications	Insulating material	Polyamide	
	Flammability	V0	
	NF F 16 101	I2F2	
Ambient temperature min/max	Service IEC 60068-2-1	-55 ... +110 °C	-67 ... +230 °C
	Storage	-55 ... +110 °C	-67 ... +230 °C
	Installing	-5 ... +40 °C	+23 ... +104 °C

All the main technical data provided are "manufacturer" values.

RoHS
RoHS

Technical data valid for copper conductors only.

1SNK164034S0201

COP

COP coding pegs

Description

– The coding pegs prevent plugs to be inserted into the wrong circuit.

Ordering details

Description	Color	Type	Part Number		Pkg qty	Weight (1 pce) g
	Dark grey	COP-ZD	1SNK900636R0000		10	3.57

Main technical data

Material specifications	Insulating material	Polyamide	
	Flammability	V0	
	NF F 16 101	I2F2	
Ambient temperature min/max	Service IEC 60068-2-1	-55 ... +110 °C	-67 ... +230 °F
	Storage	-55 ... +110 °C	-67 ... +230 °F
	Installing	-5 ... +40 °C	+23 ... +104 °F

All the main technical data provided are "manufacturer" values.

RoHS
RoHS

Mounting instructions

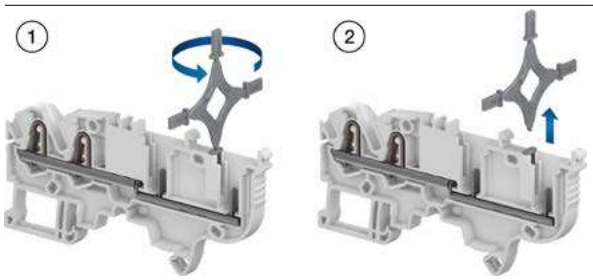

VR

9.4 mm 0.370 in spacing

VR locking devices

Description

– Automatic locking providing excellent plug withstand in case of accidental pulling,
– Lock safely one or two CDK or CDS plugs on ZDK and ZDS pluggable terminal blocks,
– Install one VR... up to 8 poles plugs assembly and two VR... up to 15 poles assembly.

Ordering details

Description	Color	Type	Part Number		Pkg qty	Weight (1 pce) g
9.4 mm 0.370 in spacing	Black	VR-ZD	1SNK900637R0000		50	6.5

Main technical data

Material specifications	Insulating material	Polyacetal	
	Flammability	HB	
	NF F 16 101		
Ambient temperature min/max	Service IEC 60068-2-1	-55 ... +110 °C	-67 ... +230 °F
	Storage	-55 ... +110 °C	-67 ... +230 °F
	Installing	-5 ... +40 °C	+23 ... +104 °F

All the main technical data provided are "manufacturer" values.

RoHS
RoHS

Mounting instructions

1SNK164009S0201

Technical data valid for copper conductors only.

SNK series, marking solutions

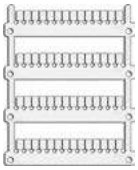

Selection guide		238-239
MG3 thermal transfer printer		240-241
AMS 600 and AMS 250 plotter		242-243

Terminal block markers

5.2 mm 0.205 in spacing

MC512, MG-CPM-13	Blank card in polycarbonate	244
MC512PA	Blank card in polyamide	245
	Pre-printed marker card for horizontal terminal block assembly	246-247
	Pre-printed marker card for vertical terminal block assembly	248-249

6 mm 0.236 in spacing

MC612, MG-CPM-13	Blank card in polycarbonate	250
MC612PA	Blank card in polyamide	251
	Pre-printed marker card for horizontal terminal block assembly	252-253
	Pre-printed marker card for vertical terminal block assembly	254

8 mm 0.315 in spacing

MC812, MC812PA	Blank card	256
MC812PA	Pre-printed marker card for horizontal terminal block assembly	257-258
	Pre-printed marker card for vertical terminal block assembly	259-260

Markers

UMH	Universal wire markers holder	261
MG2-TDMO	Clip-on blank wire marker	261
MG-TAR, MG-TAA	Markers for components	262
MG-TAPW	Markers for components	263
MCLH	Label	264

Marking systems

HTP500	Consumable	265
MG3	Thermal transfer printer	266
AMS	Plotter	267-248

For versatile applications

Marking systems	MG3
Technology	Thermal transfer
Printing mode	Manual
Printing speed	Medium
Printing quality	300 x 600 dpi
1 ribbon or ink cartridge printing capacity	~ 160 000, MG-CPM (5 x 10 mm markers)
Printing color available (monochrome)	Black / Red / Blue / Green / White
Terminal block markers material	Polycarbonate
Terminal block markers	
SNK series terminal blocks blank markers polyamide	–
SNK series terminal blocks blank markers polycarbonate	MG-CPM
SNK series terminal blocks blank markers PVC	MG-CPMF
End stop markers	2 marker types
Other terminal blocks manufacturers blank markers	15 manufacturers
Wires and cables markers	4 marker types
Components and equipment markers	9 marker types

For basic marking applications

	AMS 600 - AMS 250
	Plotter
	Manual
	Low
	300 x 300 dpi
	~ 230 000 markers (with 3 characters per markers)
	Black
	Polyamide
	MC…PA
	–
	–
	4 marker types
	5 manufacturers
	1 marker type
	9 marker types

6

1SNC160226S0201

The versatile, compact and robust marking system

MARKINGenius® MG3 is a high resolution printer based on thermal transfer technology for producing high quality identification and labelling for terminal blocks, cables and all equipment mounted in electrical panels.

Compact, ergonomic, clean and quiet, MARKINGenius® MG3 may be conveniently located in an office or workshop or easily transported in the field.

Thermal transfer technology uses heat to transfer characters or symbols onto a plastic marker through an ink ribbon. Besides the excellent printing quality, there is no drying time and the markers are instantly usable.
With the MG3 thermal transfer printer, forget about drying times and clogged print head problems.

Combined simplicity, performance and make savings

Facilitate your printing process
Compact design (382 x 230 x 230 mm) facilitates use in workshops or in the field.
Easy to install and use: comprehensive quick-start kit. Intuitive software with easy data import and entry.
Versatile: many different media available: plastic markers, stickers, labels etc.

Save time and consumables
Gain time with a short printing process: 12 seconds cycle. Carriage loading and unloading operation is fast and simple.
Economic: up to 300 000 markers with one ribbon. Partially printed marker card may be reused to avoid wastage.
No drying time: printed markers are immediately ready to use.

Experience quality
High Quality printing: 300 x 600 dpi for image or graphic printing.
Robust: all moving parts are in metal.

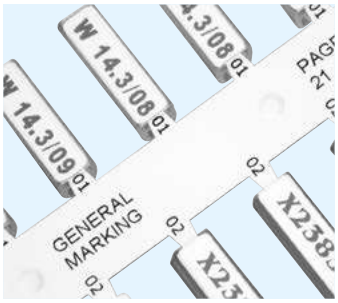

High quality printing

Short printing cycle of 12 seconds

Economic: up to 300 000 markers with one ribbon

Many media types available for printing

1SNC160211S0201

The MG3 printer is delivered with a comprehensive set of accessories for getting started quickly

Kit (Part number: 1SNB419001R0000) including:

- 1 Thermal transfer printer
- 1 Software CD
- 1 Power supply cable
- 1 USB cable
- 1 Installation, operating, maintenance and user documentation
- 1 Protective cover
- 1 Ribbon take up spool
- 1 MG2-QTB support plate for terminal block markers (MG-CPM-01, 02, 03, 04, 07)
- 1 MG2-PWC support plate for wire and cable markers (MG-TPM)
- 1 MG2-PLT support plate for wire and cable markers (MG-TPMF) and various labels and signs
- 1 MG2-ETB Support plate for SNK series terminal block markers (MG-CPM-13)
- 1 MG2-ETR Black printing ribbon.

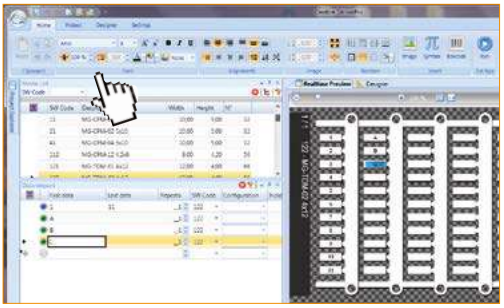

Genius Pro software

The Genius Pro software application benefits from long experience in the field and requires the operator to have only basic skills in order to use it. It is application-oriented and provides fast and easy data entry including a dynamic full-size media preview giving an accurate representation of the current job.

Features / characteristics:

- More than ten types of counter such as *.txt, *.cad, *.dbf, *.xls can be imported
- AutoCAD, Elcad, Spac and Excel import
- MATRIX, ACS and Simplo conversion
- Optimised printing of media for cables, terminal blocks, control gear, connectors, push buttons, components, panels and self-adhesive labels
- Specially developed proprietary Genius font and also Windows fonts
- Designs customised media
- Vector, drawing and clip art printing
- Free upgrades for each new release
- Microsoft® Windows® XP, Windows Vista®, Windows 2000 SP4®, Windows 7®.

1SNC160211S0201

AMS 600

Universal printing plotter

Compatible with all original manufacturer terminal block markers (polyamide), it can also print other identification supports such as: wire and cable markers, push buttons, panels…
This plotter offers a large working area, hosting up to 4 different support plates for one plot job.

Error detection mode

The A3 panel automatically recognises the support plate and avoids the need to select marking elements, it also warns the user when the support is wrongly installed.

Dry out protection system

Pens are prevented from drying out thanks to AMS 600 integrated pen station.

AMS 250

Compact

This A4 plotter is smaller than AMS 600 and is more suited to a cluttered environment.

1SNC160215S0201

Automatic installation

The installation program starts automatically. The computer just needs to be rebooted after it has finished and printing can start.

What you see is what you get !

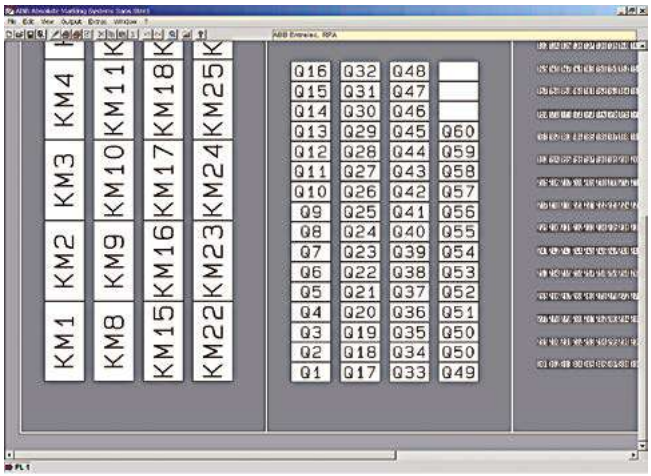

User friendly
Microsoft® Windows® software

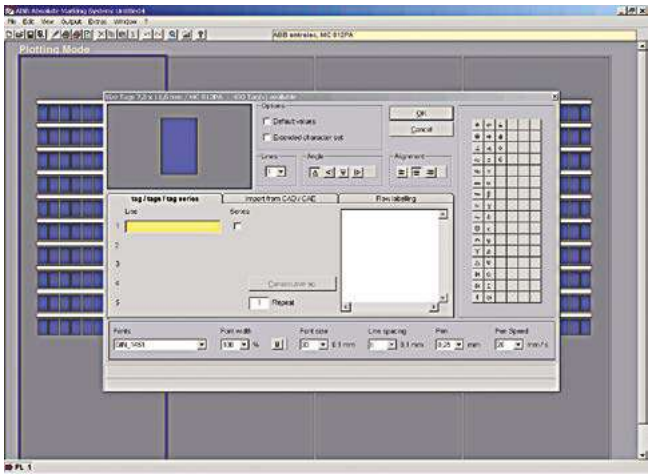

Time saving: data import function
from CAD, TXT and Excel® files

Microsoft, Windows, Excel are trademarks of Microsoft Corporation.

New special ink disposable plotter pens ED-R

- Disposable pens ED-R almost never clog, they are ideal for use in particularly dry environments.
- These pens are filled with the permanent ink ED, most suitable for marking various plastic surfaces.
- The ED ink should only be used on plastic material. Do not clean or touch with aggressive fluids.
- For applications outside of the control panel the ink P 2.0 is more suitable and durable.

1SNC160215S0201

MC512

HTP500-V2

MC512 terminal block markers

Description

- MC512 marker card in polycarbonate for high marking quality, durability and speed when marked with the HTP500 printer,
- Excellent marking durability in the most severe environments,
- Improved marking visibility thanks to the increased marking surface +20% (12 mm 0.472 in).

Main technical data

Material	Flammability	Maximum printed digits				Dimensions	
						mm	inches
Polycarbonate	V0	Horizontal	3	Vertical	8	4.8 x 12	0.189 x 0.472

Ordering details

Description	Number of markers per card	Color	Type	Part Number		Pkg card	Weight (1 pce) g
Blank card	45	White	MC512	1SNK140000R0000		22	9.00
		Yellow	MC512-YL	1SNK140004R0000		22	9.00

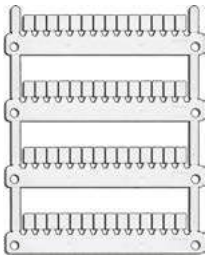

MG-CPM-13

MG3 KIT

MG-CPM-13 terminal block markers

Description

- MG-CPM-13 41790 and 41740 markers are used for marking 5.2 mm 0.205 in spacing SNK terminal blocks,
- Provide an elevate mechanical robustness, high dimensional stability and are halogen free,
- Single application on terminal block,
- 35 cards per packing

Main technical data

Material	Flammability	Maximum printed digits				Dimensions	
						mm	inches
Polycarbonate	V2	Horizontal	3	Vertical	8	4.8 x 12	0.196 x 0.472

Ordering details

Description	Number of markers per card	Color	Type	Part Number		Pkg marker	Weight (1 pce) g
Blank card	56	White	MG-CPM 13 41790	1SNB041790R0512		1960	0.232
		Yellow	MG-CPM 13 41740	1SNB041740R0512		1960	0.232

Marking systems

Description	Type	Part Number		Pkg qty	Weight (1 pce) g
Thermal transfer printer	MG3 KIT	1SNB419001R0000		1	12600.00

Marking systems accessories

Description	Type	Part Number		Pkg qty	Weight (1 pce) g
Support plate for MG-CPM-13	MG2-ETB 991016	1SNB991016R0000		1	100.00

MC512PA

AMS 600

MC512PA terminal block markers

Description

- MC512PA marker card in polyamide to be marked on AMS 600 marking table for medium scale volumes and standard industrial applications,
- Terminal blocks are directly independent after strip mounting,
- Improved marking visibility thanks to the increased marking surface +20% (12 mm 0.472 in).

Main technical data

Material	Flammability	Maximum printed digits				Dimensions	
						mm	inches
Polyamide	V2	Horizontal	3	Vertical	8	4.8 x 12	0.189 x 0.472

Ordering details

Description	Number of markers per card	Color	Type	Part Number		Pkg card	Weight (1 pce) g
Blank card	100	White ☐	MC512PA	1SNK149999R0000		20	10.00

Marking systems

Description	Type	Part Number		Pkg qty	Weight (1 pce) g
AMS plotter	AMS 600 KIT	1SNA360000R2400		1	12600.00

Marking systems accessories

Description	Type	Part Number		Pkg qty	Weight (1 pce) g
Marking support plate for MC PA marker cards (3 MC PA marker cards per plate)	SPRC 30-3	1SNA360039R1700		1	300.00

1SNK160076S0201

MC512PA terminal block markers

Pre-printed marker card for horizontal terminal block assembly

MC512PA

5.2 mm 0.205 in spacing

Description

Save printing time with our large pre-printed cards offer with pre-printed numbers, letters or symbols.

Main technical data

Material	Flammability	Dimensions mm	Dimensions inches
Polyamide	V2	4.8 x 12	0.189 x 0.472

Ordering details

Description	Number of markers per card	Color	Type	Part Number		Pkg card	Weight (1 pce) g
0->9 (x10)	100	White ☐	MC512PA	1SNK140091R0000		1	10.00
1->10 (x10)	100	White ☐	MC512PA	1SNK140011R0000		1	10.00
11->20 (x10)	100	White ☐	MC512PA	1SNK140021R0000		1	10.00
21->30 (x10)	100	White ☐	MC512PA	1SNK140031R0000		1	10.00
31->40 (x10)	100	White ☐	MC512PA	1SNK140041R0000		1	10.00
41->50 (x10)	100	White ☐	MC512PA	1SNK140051R0000		1	10.00
51->60 (x10)	100	White ☐	MC512PA	1SNK140061R0000		1	10.00
61->70 (x10)	100	White ☐	MC512PA	1SNK140071R0000		1	10.00
71->80 (x10)	100	White ☐	MC512PA	1SNK140081R0000		1	10.00
81->90 (x10)	100	White ☐	MC512PA	1SNK140083R0000		1	10.00
91->100 (x10)	100	White ☐	MC512PA	1SNK140101R0000		1	10.00
101->110 (x10)	100	White ☐	MC512PA	1SNK140111R0000		1	10.00
111->120 (x10)	100	White ☐	MC512PA	1SNK140121R0000		1	10.00
121->130 (x10)	100	White ☐	MC512PA	1SNK140131R0000		1	10.00
131->140 (x10)	100	White ☐	MC512PA	1SNK140141R0000		1	10.00
141->150 (x10)	100	White ☐	MC512PA	1SNK140151R0000		1	10.00
151->160 (x10)	100	White ☐	MC512PA	1SNK140161R0000		1	10.00
161->170 (x10)	100	White ☐	MC512PA	1SNK140171R0000		1	10.00
171->180 (x10)	100	White ☐	MC512PA	1SNK140181R0000		1	10.00
181->190 (x10)	100	White ☐	MC512PA	1SNK140191R0000		1	10.00
191->200 (x10)	100	White ☐	MC512PA	1SNK140201R0000		1	10.00
1->100	100	White ☐	MC512PA	1SNK145011R0000		1	10.00
101->200	100	White ☐	MC512PA	1SNK145021R0000		1	10.00
201->300	100	White ☐	MC512PA	1SNK145031R0000		1	10.00
301->400	100	White ☐	MC512PA	1SNK145041R0000		1	10.00
401->500	100	White ☐	MC512PA	1SNK145051R0000		1	10.00
501->600	100	White ☐	MC512PA	1SNK145061R0000		1	10.00
601->700	100	White ☐	MC512PA	1SNK145071R0000		1	10.00
701->800	100	White ☐	MC512PA	1SNK145081R0000		1	10.00
801->900	100	White ☐	MC512PA	1SNK145091R0000		1	10.00
A (x100)	100	White ☐	MC512PA	1SNK146011R0000		1	10.00
B (x100)	100	White ☐	MC512PA	1SNK146021R0000		1	10.00
C (x100)	100	White ☐	MC512PA	1SNK146031R0000		1	10.00
D (x100)	100	White ☐	MC512PA	1SNK146041R0000		1	10.00
E (x100)	100	White ☐	MC512PA	1SNK146051R0000		1	10.00
F (x100)	100	White ☐	MC512PA	1SNK146061R0000		1	10.00
G (x100)	100	White ☐	MC512PA	1SNK146071R0000		1	10.00
H (x100)	100	White ☐	MC512PA	1SNK146081R0000		1	10.00
I (x100)	100	White ☐	MC512PA	1SNK146091R0000		1	10.00
J (x100)	100	White ☐	MC512PA	1SNK146101R0000		1	10.00
K (x100)	100	White ☐	MC512PA	1SNK146111R0000		1	10.00
L (x100)	100	White ☐	MC512PA	1SNK146121R0000		1	10.00
M (x100)	100	White ☐	MC512PA	1SNK146131R0000		1	10.00
N (x100)	100	White ☐	MC512PA	1SNK146141R0000		1	10.00
O (x100)	100	White ☐	MC512PA	1SNK146151R0000		1	10.00
P (x100)	100	White ☐	MC512PA	1SNK146161R0000		1	10.00
Q (x100)	100	White ☐	MC512PA	1SNK146171R0000		1	10.00
R (x100)	100	White ☐	MC512PA	1SNK146181R0000		1	10.00
S (x100)	100	White ☐	MC512PA	1SNK146191R0000		1	10.00
T (x100)	100	White ☐	MC512PA	1SNK146201R0000		1	10.00
U (x100)	100	White ☐	MC512PA	1SNK146211R0000		1	10.00
V (x100)	100	White ☐	MC512PA	1SNK146221R0000		1	10.00
W (x100)	100	White ☐	MC512PA	1SNK146231R0000		1	10.00
X (x100)	100	White ☐	MC512PA	1SNK146241R0000		1	10.00
Y (x100)	100	White ☐	MC512PA	1SNK146251R0000		1	10.00

Continue on next page →

MC512PA terminal block markers

Pre-printed marker card for horizontal terminal block assembly

MC512PA

5.2 mm 0.205 in spacing

Ordering details

Description	Number of markers per card	Color	Type	Part Number		Pkg card	Weight (1 pce) g
← Continuation of previous page							
Z (x100)	100	White	MC512PA	1SNK146261R0000		1	10.00
0 (x100)	100	White	MC512PA	1SNK147001R0000		1	10.00
1 (x100)	100	White	MC512PA	1SNK147011R0000		1	10.00
2 (x100)	100	White	MC512PA	1SNK147021R0000		1	10.00
3 (x100)	100	White	MC512PA	1SNK147031R0000		1	10.00
4 (x100)	100	White	MC512PA	1SNK147041R0000		1	10.00
5 (x100)	100	White	MC512PA	1SNK147051R0000		1	10.00
6 (x100)	100	White	MC512PA	1SNK147061R0000		1	10.00
7 (x100)	100	White	MC512PA	1SNK147071R0000		1	10.00
8 (x100)	100	White	MC512PA	1SNK147081R0000		1	10.00
9 (x100)	100	White	MC512PA	1SNK147091R0000		1	10.00
+ (x100)	100	White	MC512PA	1SNK148001R0000		1	10.00
- (x100)	100	White	MC512PA	1SNK148011R0000		1	10.00
~ (x100)	100	White	MC512PA	1SNK148021R0000		1	10.00
= (x100)	100	White	MC512PA	1SNK148031R0000		1	10.00
⏚ (x100)	100	White	MC512PA	1SNK148041R0000		1	10.00
L1 (x100)	100	White	MC512PA	1SNK148051R0000		1	10.00
L2 (x100)	100	White	MC512PA	1SNK148061R0000		1	10.00
L3 (x100)	100	White	MC512PA	1SNK148071R0000		1	10.00
PE (x100)	100	White	MC512PA	1SNK148091R0000		1	10.00
U1 (x100)	100	White	MC512PA	1SNK148101R0000		1	10.00
U2 (x100)	100	White	MC512PA	1SNK148111R0000		1	10.00
U3 (x100)	100	White	MC512PA	1SNK148121R0000		1	10.00
V1 (x100)	100	White	MC512PA	1SNK148131R0000		1	10.00
V2 (x100)	100	White	MC512PA	1SNK148141R0000		1	10.00
V3 (x100)	100	White	MC512PA	1SNK148151R0000		1	10.00
W1 (x100)	100	White	MC512PA	1SNK148161R0000		1	10.00
W2 (x100)	100	White	MC512PA	1SNK148171R0000		1	10.00
W3 (x100)	100	White	MC512PA	1SNK148181R0000		1	10.00
L1-L2-L3-N-PE (x20)	100	White	MC512PA	1SNK149001R0000		1	10.00
U1-U2-U3-V1-V2-V3-W1-W2-W3 (x10) + U1 (x10)	100	White	MC512PA	1SNK149011R0000		1	10.00

1SNK160004S0201 - Rev. A

MC512PA terminal block markers

Pre-printed marker card for vertical terminal block assembly

MC512PA

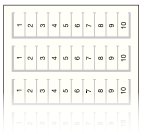

5.2 mm 0.205 in spacing

Description

Save printing time with our large pre-printed cards offer with pre-printed numbers, letters or symbols.

Main technical data

Material	Flammability	Dimensions mm	Dimensions inches
Polyamide	V2	4.8 x 12	0.189 x 0.472

Ordering details

Description	Number of markers per card	Color	Type	Part Number		Pkg card	Weight (1 pce) g
0->9 (x10)	100	White ☐	MC512PA	1SNK140092R0000		1	10.00
1->10 (x10)	100	White ☐	MC512PA	1SNK140012R0000		1	10.00
11->20 (x10)	100	White ☐	MC512PA	1SNK140022R0000		1	10.00
21->30 (x10)	100	White ☐	MC512PA	1SNK140032R0000		1	10.00
31->40 (x10)	100	White ☐	MC512PA	1SNK140042R0000		1	10.00
41->50 (x10)	100	White ☐	MC512PA	1SNK140052R0000		1	10.00
51->60 (x10)	100	White ☐	MC512PA	1SNK140062R0000		1	10.00
61->70 (x10)	100	White ☐	MC512PA	1SNK140072R0000		1	10.00
71->80 (x10)	100	White ☐	MC512PA	1SNK140082R0000		1	10.00
81->90 (x10)	100	White ☐	MC512PA	1SNK140084R0000		1	10.00
91->100 (x10)	100	White ☐	MC512PA	1SNK140102R0000		1	10.00
101->110 (x10)	100	White ☐	MC512PA	1SNK140112R0000		1	10.00
111->120 (x10)	100	White ☐	MC512PA	1SNK140122R0000		1	10.00
121->130 (x10)	100	White ☐	MC512PA	1SNK140132R0000		1	10.00
131->140 (x10)	100	White ☐	MC512PA	1SNK140142R0000		1	10.00
141->150 (x10)	100	White ☐	MC512PA	1SNK140152R0000		1	10.00
151->160 (x10)	100	White ☐	MC512PA	1SNK140162R0000		1	10.00
161->170 (x10)	100	White ☐	MC512PA	1SNK140172R0000		1	10.00
171->180 (x10)	100	White ☐	MC512PA	1SNK140182R0000		1	10.00
181->190 (x10)	100	White ☐	MC512PA	1SNK140192R0000		1	10.00
191->200 (x10)	100	White ☐	MC512PA	1SNK140202R0000		1	10.00
1->100	100	White ☐	MC512PA	1SNK145012R0000		1	10.00
101->200	100	White ☐	MC512PA	1SNK145022R0000		1	10.00
201->300	100	White ☐	MC512PA	1SNK145032R0000		1	10.00
301->400	100	White ☐	MC512PA	1SNK145042R0000		1	10.00
401->500	100	White ☐	MC512PA	1SNK145052R0000		1	10.00
501->600	100	White ☐	MC512PA	1SNK145062R0000		1	10.00
601->700	100	White ☐	MC512PA	1SNK145072R0000		1	10.00
701->800	100	White ☐	MC512PA	1SNK145082R0000		1	10.00
801->900	100	White ☐	MC512PA	1SNK145092R0000		1	10.00
901->1000	100	White ☐	MC512PA	1SNK145102R0000		1	10.00
A (x100)	100	White ☐	MC512PA	1SNK146012R0000		1	10.00
B (x100)	100	White ☐	MC512PA	1SNK146022R0000		1	10.00
C (x100)	100	White ☐	MC512PA	1SNK146032R0000		1	10.00
D (x100)	100	White ☐	MC512PA	1SNK146042R0000		1	10.00
E (x100)	100	White ☐	MC512PA	1SNK146052R0000		1	10.00
F (x100)	100	White ☐	MC512PA	1SNK146062R0000		1	10.00
G (x100)	100	White ☐	MC512PA	1SNK146072R0000		1	10.00
H (x100)	100	White ☐	MC512PA	1SNK146082R0000		1	10.00
I (x100)	100	White ☐	MC512PA	1SNK146092R0000		1	10.00
J (x100)	100	White ☐	MC512PA	1SNK146102R0000		1	10.00
K (x100)	100	White ☐	MC512PA	1SNK146112R0000		1	10.00
L (x100)	100	White ☐	MC512PA	1SNK146122R0000		1	10.00
M (x100)	100	White ☐	MC512PA	1SNK146132R0000		1	10.00
N (x100)	100	White ☐	MC512PA	1SNK146142R0000		1	10.00
O (x100)	100	White ☐	MC512PA	1SNK146152R0000		1	10.00
P (x100)	100	White ☐	MC512PA	1SNK146162R0000		1	10.00
Q (x100)	100	White ☐	MC512PA	1SNK146172R0000		1	10.00
R (x100)	100	White ☐	MC512PA	1SNK146182R0000		1	10.00
S (x100)	100	White ☐	MC512PA	1SNK146192R0000		1	10.00
T (x100)	100	White ☐	MC512PA	1SNK146202R0000		1	10.00
U (x100)	100	White ☐	MC512PA	1SNK146212R0000		1	10.00
V (x100)	100	White ☐	MC512PA	1SNK146222R0000		1	10.00

Continue on next page →

MC512PA terminal block markers

Pre-printed marker card for vertical terminal block assembly

MC512PA

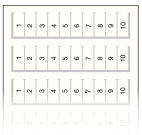

5.2 mm 0.205 in spacing

Ordering details

Description	Number of markers per card	Color	Type	Part Number		Pkg card	Weight (1 pce) g
← Continuation of previous page							
W (x100)	100	White ☐	MC512PA	1SNK146232R0000		1	10.00
X (x100)	100	White ☐	MC512PA	1SNK146242R0000		1	10.00
Y (x100)	100	White ☐	MC512PA	1SNK146252R0000		1	10.00
Z (x100)	100	White ☐	MC512PA	1SNK146262R0000		1	10.00
0 (x100)	100	White ☐	MC512PA	1SNK147002R0000		1	10.00
1 (x100)	100	White ☐	MC512PA	1SNK147012R0000		1	10.00
2 (x100)	100	White ☐	MC512PA	1SNK147022R0000		1	10.00
3 (x100)	100	White ☐	MC512PA	1SNK147032R0000		1	10.00
4 (x100)	100	White ☐	MC512PA	1SNK147042R0000		1	10.00
5 (x100)	100	White ☐	MC512PA	1SNK147052R0000		1	10.00
6 (x100)	100	White ☐	MC512PA	1SNK147062R0000		1	10.00
7 (x100)	100	White ☐	MC512PA	1SNK147072R0000		1	10.00
8 (x100)	100	White ☐	MC512PA	1SNK147082R0000		1	10.00
9 (x100)	100	White ☐	MC512PA	1SNK147092R0000		1	10.00
+ (x100)	100	White ☐	MC512PA	1SNK148002R0000		1	10.00
- (x100)	100	White ☐	MC512PA	1SNK148012R0000		1	10.00
~ (x100)	100	White ☐	MC512PA	1SNK148022R0000		1	10.00
= (x100)	100	White ☐	MC512PA	1SNK148032R0000		1	10.00
⏚ (x100)	100	White ☐	MC512PA	1SNK148042R0000		1	10.00
L1 (x100)	100	White ☐	MC512PA	1SNK148052R0000		1	10.00
L2 (x100)	100	White ☐	MC512PA	1SNK148062R0000		1	10.00
L3 (x100)	100	White ☐	MC512PA	1SNK148072R0000		1	10.00
PE (x100)	100	White ☐	MC512PA	1SNK148092R0000		1	10.00
U1 (x100)	100	White ☐	MC512PA	1SNK148102R0000		1	10.00
U2 (x100)	100	White ☐	MC512PA	1SNK148112R0000		1	10.00
U3 (x100)	100	White ☐	MC512PA	1SNK148122R0000		1	10.00
V1 (x100)	100	White ☐	MC512PA	1SNK148132R0000		1	10.00
V2 (x100)	100	White ☐	MC512PA	1SNK148142R0000		1	10.00
V3 (x100)	100	White ☐	MC512PA	1SNK148152R0000		1	10.00
W1 (x100)	100	White ☐	MC512PA	1SNK148162R0000		1	10.00
W2 (x100)	100	White ☐	MC512PA	1SNK148172R0000		1	10.00
W3 (x100)	100	White ☐	MC512PA	1SNK148182R0000		1	10.00
+24V (x100)	100	White ☐	MC512PA	1SNK148192R0000		1	10.00
+48V (x100)	100	White ☐	MC512PA	1SNK148202R0000		1	10.00
-24V (x100)	100	White ☐	MC512PA	1SNK148212R0000		1	10.00
-48V (x100)	100	White ☐	MC512PA	1SNK148222R0000		1	10.00
L1-L2-L3-N-PE (x20)	100	White ☐	MC512PA	1SNK149002R0000		1	10.00
U1-U2-U3-V1-V2-V3-W1-W2-W3 (x10) + U1 (x10)	100	White ☐	MC512PA	1SNK149012R0000		1	10.00

1SNK160005S0201 - Rev. A

MC612

HTP500-V2

MC612 terminal block markers

Description

- MC612 marker card in polycarbonate for high marking quality, durability and speed when marked with the HTP500 printer,
- Excellent marking durability in the most severe environments,
- Improved marking visibility thanks to the increased marking surface +20% (12 mm 0.472 in).

Main technical data

Material	Flammability	Maximum printed digits				Dimensions mm	Dimensions inches
Polycarbonate	V0	Horizontal	3	Vertical	8	5.6 x 12	0.220 x 0.472

Ordering details

Description	Number of markers per card	Color	Type	Part number		Pkg card	Weight (1 pce) g
Blank card	39	White	MC612	1SNK150000R0000		22	10.00
		Yellow	MC612-YL	1SNK150004R0000		22	10.00

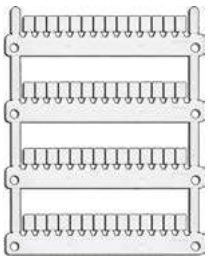

MG-CPM-13

MG3 KIT

MG-CPM-13 terminal block markers

Description

- MG-CPM-13 41791 and 41741 markers are used for marking 6 mm 0.236 in spacing SNK terminal blocks,
- Provide an elevate mechanical robustness, high dimensional stability and are halogen free,
- Single application on terminal block,
- 35 cards per packing.

Main technical data

Material	Flammability	Maximum printed digits				Dimensions mm	Dimensions inches
Polycarbonate	V0	Horizontal	3	Vertical	8	5.6 x 12	0.236 x 0.472

Ordering details

Description	Number of markers per card	Color	Type	Part number		Pkg marker	Weight (1 pce) g
Blank card	48	White	MG-CPM 13 41791	1SNB041791R0612		1680	0.273
		Yellow	MG-CPM 13 41741	1SNB041741R0612		1680	0.273

Marking systems

Description	Type	Part number		Pkg qty	Weight (1 pce) g
Thermal transfer printer	MG3 KIT	1SNB419001R0000		1	12600.00

Marking systems accessories

Description	Type	Part number		Pkg qty	Weight (1 pce) g
Support plate for MG-CPM-13	MG2-ETB 991016	1SNB991016R0000		1	100.00

MC612

AMS 600

MC612PA terminal block markers

Description

- MC612PA marker card in polyamide to be marked on AMS 600 marking table for medium scale volumes and standard industrial applications,
- Terminal blocks are directly independent after strip mounting,
- Improved marking visibility thanks to the increased marking surface +20% (12 mm 0.472 in).

Main technical data

Material	Flammability	Maximum printed digits				Dimensions	
						mm	inches
Polyamide	V2	Horizontal	3	Vertical	8	5.6 x 12	0.220 x 0.472

Ordering details

Description	Number of markers per card	Color	Type	Part Number		Pkg card	Weight (1 pce) g
Blank card	100	White ☐	MC612PA	1SNK159999R0000		20	11.00

Marking systems

Description	Type	Part Number		Pkg qty	Weight (1 pce) g
AMS plotter	AMS 600 KIT	1SNA360000R2400		1	12600.00

Marking systems accessories

Description	Type	Part Number		Pkg qty	Weight (1 pce) g
Marking support plate for MC PA marker cards (3 MC PA marker cards per plate)	SPRC 30-3	1SNA360039R1700		1	300.00

1SNK160077S0201

MC612PA terminal block markers

Pre-printed marker card for horizontal terminal block assembly

MC612PA

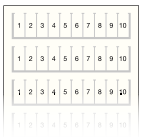

6 mm 0.236 in spacing

Description

Save printing time with our large pre-printed cards offer with pre-printed numbers, letters or symbols.

Main technical data

Material	Flammability	Dimensions mm	Dimensions inches
Polyamide	V2	5.6 x 12	0.220 x 0.472

Ordering details

Description	Number of markers per card	Color	Type	Part Number		Pkg card	Weight (1 pce) g
0->9 (x10)	100	White ☐	MC612PA	1SNK150091R0000		1	11.00
1->10 (x10)	100	White ☐	MC612PA	1SNK150011R0000		1	11.00
11->20 (x10)	100	White ☐	MC612PA	1SNK150021R0000		1	11.00
21->30 (x10)	100	White ☐	MC612PA	1SNK150031R0000		1	11.00
31->40 (x10)	100	White ☐	MC612PA	1SNK150041R0000		1	11.00
41->50 (x10)	100	White ☐	MC612PA	1SNK150051R0000		1	11.00
51->60 (x10)	100	White ☐	MC612PA	1SNK150061R0000		1	11.00
61->70 (x10)	100	White ☐	MC612PA	1SNK150071R0000		1	11.00
71->80 (x10)	100	White ☐	MC612PA	1SNK150081R0000		1	11.00
81->90 (x10)	100	White ☐	MC612PA	1SNK150083R0000		1	11.00
91->100 (x10)	100	White ☐	MC612PA	1SNK150101R0000		1	11.00
101->110 (x10)	100	White ☐	MC612PA	1SNK150111R0000		1	11.00
111->120 (x10)	100	White ☐	MC612PA	1SNK150121R0000		1	11.00
121->130 (x10)	100	White ☐	MC612PA	1SNK150131R0000		1	11.00
131->140 (x10)	100	White ☐	MC612PA	1SNK150141R0000		1	11.00
141->150 (x10)	100	White ☐	MC612PA	1SNK150151R0000		1	11.00
151->160 (x10)	100	White ☐	MC612PA	1SNK150161R0000		1	11.00
161->170 (x10)	100	White ☐	MC612PA	1SNK150171R0000		1	11.00
171->180 (x10)	100	White ☐	MC612PA	1SNK150181R0000		1	11.00
181->190 (x10)	100	White ☐	MC612PA	1SNK150191R0000		1	11.00
191->200 (x10)	100	White ☐	MC612PA	1SNK150201R0000		1	11.00
1->100	100	White ☐	MC612PA	1SNK155011R0000		1	11.00
101->200	100	White ☐	MC612PA	1SNK155021R0000		1	11.00
201->300	100	White ☐	MC612PA	1SNK155031R0000		1	11.00
301->400	100	White ☐	MC612PA	1SNK155041R0000		1	11.00
401->500	100	White ☐	MC612PA	1SNK155051R0000		1	11.00
501->600	100	White ☐	MC612PA	1SNK155061R0000		1	11.00
601->700	100	White ☐	MC612PA	1SNK155071R0000		1	11.00
701->800	100	White ☐	MC612PA	1SNK155081R0000		1	11.00
801->900	100	White ☐	MC612PA	1SNK155091R0000		1	11.00
A (x100)	100	White ☐	MC612PA	1SNK156011R0000		1	11.00
B (x100)	100	White ☐	MC612PA	1SNK156021R0000		1	11.00
C (x100)	100	White ☐	MC612PA	1SNK156031R0000		1	11.00
D (x100)	100	White ☐	MC612PA	1SNK156041R0000		1	11.00
E (x100)	100	White ☐	MC612PA	1SNK156051R0000		1	11.00
F (x100)	100	White ☐	MC612PA	1SNK156061R0000		1	11.00
G (x100)	100	White ☐	MC612PA	1SNK156071R0000		1	11.00
H (x100)	100	White ☐	MC612PA	1SNK156081R0000		1	11.00
I (x100)	100	White ☐	MC612PA	1SNK156091R0000		1	11.00
J (x100)	100	White ☐	MC612PA	1SNK156101R0000		1	11.00
K (x100)	100	White ☐	MC612PA	1SNK156111R0000		1	11.00
L (x100)	100	White ☐	MC612PA	1SNK156121R0000		1	11.00
M (x100)	100	White ☐	MC612PA	1SNK156131R0000		1	11.00
N (x100)	100	White ☐	MC612PA	1SNK156141R0000		1	11.00
O (x100)	100	White ☐	MC612PA	1SNK156151R0000		1	11.00
P (x100)	100	White ☐	MC612PA	1SNK156161R0000		1	11.00
Q (x100)	100	White ☐	MC612PA	1SNK156171R0000		1	11.00
R (x100)	100	White ☐	MC612PA	1SNK156181R0000		1	11.00
S (x100)	100	White ☐	MC612PA	1SNK156191R0000		1	11.00
T (x100)	100	White ☐	MC612PA	1SNK156201R0000		1	11.00
U (x100)	100	White ☐	MC612PA	1SNK156211R0000		1	11.00
V (x100)	100	White ☐	MC612PA	1SNK156221R0000		1	11.00
W (x100)	100	White ☐	MC612PA	1SNK156231R0000		1	11.00

Continue on next page →

1SNK160007S0201 - Rev. A

MC612PA terminal block markers

Pre-printed marker card for horizontal terminal block assembly

MC612PA

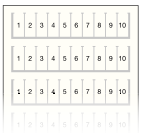

6 mm 0.236 in spacing

Ordering details

Description	Number of markers per card	Color	Type	Part Number		Pkg card	Weight (1 pce) g
← Continuation of previous page							
X (x100)	100	White ☐	MC612PA	1SNK156241R0000		1	11.00
Y (x100)	100	White ☐	MC612PA	1SNK156251R0000		1	11.00
Z (x100)	100	White ☐	MC612PA	1SNK156261R0000		1	11.00
0 (x100)	100	White ☐	MC612PA	1SNK157001R0000		1	11.00
1 (x100)	100	White ☐	MC612PA	1SNK157011R0000		1	11.00
2 (x100)	100	White ☐	MC612PA	1SNK157021R0000		1	11.00
3 (x100)	100	White ☐	MC612PA	1SNK157031R0000		1	11.00
4 (x100)	100	White ☐	MC612PA	1SNK157041R0000		1	11.00
5 (x100)	100	White ☐	MC612PA	1SNK157051R0000		1	11.00
6 (x100)	100	White ☐	MC612PA	1SNK157061R0000		1	11.00
7 (x100)	100	White ☐	MC612PA	1SNK157071R0000		1	11.00
8 (x100)	100	White ☐	MC612PA	1SNK157081R0000		1	11.00
9 (x100)	100	White ☐	MC612PA	1SNK157091R0000		1	11.00
+ (x100)	100	White ☐	MC612PA	1SNK158001R0000		1	11.00
- (x100)	100	White ☐	MC612PA	1SNK158011R0000		1	11.00
~ (x100)	100	White ☐	MC612PA	1SNK158021R0000		1	11.00
= (x100)	100	White ☐	MC612PA	1SNK158031R0000		1	11.00
Ground (x100)	100	White ☐	MC612PA	1SNK158041R0000		1	11.00
L1 (x100)	100	White ☐	MC612PA	1SNK158051R0000		1	11.00
L2 (x100)	100	White ☐	MC612PA	1SNK158061R0000		1	11.00
L3 (x100)	100	White ☐	MC612PA	1SNK158071R0000		1	11.00
PE (x100)	100	White ☐	MC612PA	1SNK158091R0000		1	11.00
U1 (x100)	100	White ☐	MC612PA	1SNK158101R0000		1	11.00
U2 (x100)	100	White ☐	MC612PA	1SNK158111R0000		1	11.00
U3 (x100)	100	White ☐	MC612PA	1SNK158121R0000		1	11.00
V1 (x100)	100	White ☐	MC612PA	1SNK158131R0000		1	11.00
V2 (x100)	100	White ☐	MC612PA	1SNK158141R0000		1	11.00
V3 (x100)	100	White ☐	MC612PA	1SNK158151R0000		1	11.00
W1 (x100)	100	White ☐	MC612PA	1SNK158161R0000		1	11.00
W2 (x100)	100	White ☐	MC612PA	1SNK158171R0000		1	11.00
W3 (x100)	100	White ☐	MC612PA	1SNK158181R0000		1	11.00
L1-L2-L3-N-PE (x20)	100	White ☐	MC612PA	1SNK159001R0000		1	11.00
U1-U2-U3-V1-V2-V3-W1-W2-W3 (x10) + U1 (x10)	100	White ☐	MC612PA	1SNK159011R0000		1	11.00

1SNK160007S0201 - Rev. A

MC612PA terminal block markers

Pre-printed marker card for vertical terminal block assembly

MC612PA

6 mm 0.236 in spacing

Description

Save printing time with our large pre-printed cards offer with pre-printed numbers, letters or symbols.

Main technical data

Material	Flammability	Dimensions mm	Dimensions inches
Polyamide	V2	5.6 x 12	0.220 x 0.472

Ordering details

Description	Number of markers per card	Color	Type	Part Number	Pkg card	Weight (1 pce) g
0->9 (x10)	100	White	MC612PA	1SNK150092R0000	1	11.00
1->10 (x10)	100	White	MC612PA	1SNK150012R0000	1	11.00
11->20 (x10)	100	White	MC612PA	1SNK150022R0000	1	11.00
21->30 (x10)	100	White	MC612PA	1SNK150032R0000	1	11.00
31->40 (x10)	100	White	MC612PA	1SNK150042R0000	1	11.00
41->50 (x10)	100	White	MC612PA	1SNK150052R0000	1	11.00
51->60 (x10)	100	White	MC612PA	1SNK150062R0000	1	11.00
61->70 (x10)	100	White	MC612PA	1SNK150072R0000	1	11.00
71->80 (x10)	100	White	MC612PA	1SNK150082R0000	1	11.00
81->90 (x10)	100	White	MC612PA	1SNK150084R0000	1	11.00
91->100 (x10)	100	White	MC612PA	1SNK150102R0000	1	11.00
101->110 (x10)	100	White	MC612PA	1SNK150112R0000	1	11.00
111->120 (x10)	100	White	MC612PA	1SNK150122R0000	1	11.00
121->130 (x10)	100	White	MC612PA	1SNK150132R0000	1	11.00
131->140 (x10)	100	White	MC612PA	1SNK150142R0000	1	11.00
141->150 (x10)	100	White	MC612PA	1SNK150152R0000	1	11.00
151->160 (x10)	100	White	MC612PA	1SNK150162R0000	1	11.00
161->170 (x10)	100	White	MC612PA	1SNK150172R0000	1	11.00
171->180 (x10)	100	White	MC612PA	1SNK150182R0000	1	11.00
181->190 (x10)	100	White	MC612PA	1SNK150192R0000	1	11.00
191->200 (x10)	100	White	MC612PA	1SNK150202R0000	1	11.00
1->100	100	White	MC612PA	1SNK155012R0000	1	11.00
101->200	100	White	MC612PA	1SNK155022R0000	1	11.00
201->300	100	White	MC612PA	1SNK155032R0000	1	11.00
301->400	100	White	MC612PA	1SNK155042R0000	1	11.00
401->500	100	White	MC612PA	1SNK155052R0000	1	11.00
501->600	100	White	MC612PA	1SNK155062R0000	1	11.00
601->700	100	White	MC612PA	1SNK155072R0000	1	11.00
701->800	100	White	MC612PA	1SNK155082R0000	1	11.00
801->900	100	White	MC612PA	1SNK155092R0000	1	11.00
901->1000	100	White	MC612PA	1SNK155102R0000	1	11.00
A (x100)	100	White	MC612PA	1SNK156012R0000	1	11.00
B (x100)	100	White	MC612PA	1SNK156022R0000	1	11.00
C (x100)	100	White	MC612PA	1SNK156032R0000	1	11.00
D (x100)	100	White	MC612PA	1SNK156042R0000	1	11.00
E (x100)	100	White	MC612PA	1SNK156052R0000	1	11.00
F (x100)	100	White	MC612PA	1SNK156062R0000	1	11.00
G (x100)	100	White	MC612PA	1SNK156072R0000	1	11.00
H (x100)	100	White	MC612PA	1SNK156082R0000	1	11.00
I (x100)	100	White	MC612PA	1SNK156092R0000	1	11.00
J (x100)	100	White	MC612PA	1SNK156102R0000	1	11.00
K (x100)	100	White	MC612PA	1SNK156112R0000	1	11.00
L (x100)	100	White	MC612PA	1SNK156122R0000	1	11.00
M (x100)	100	White	MC612PA	1SNK156132R0000	1	11.00
N (x100)	100	White	MC612PA	1SNK156142R0000	1	11.00
O (x100)	100	White	MC612PA	1SNK156152R0000	1	11.00
P (x100)	100	White	MC612PA	1SNK156162R0000	1	11.00
Q (x100)	100	White	MC612PA	1SNK156172R0000	1	11.00
R (x100)	100	White	MC612PA	1SNK156182R0000	1	11.00
S (x100)	100	White	MC612PA	1SNK156192R0000	1	11.00
T (x100)	100	White	MC612PA	1SNK156202R0000	1	11.00
U (x100)	100	White	MC612PA	1SNK156212R0000	1	11.00
V (x100)	100	White	MC612PA	1SNK156222R0000	1	11.00
W (x100)	100	White	MC612PA	1SNK156232R0000	1	11.00
X (x100)	100	White	MC612PA	1SNK156242R0000	1	11.00

Continue on next page →

MC612PA terminal block markers

Pre-printed marker card for vertical terminal block assembly

MC612PA

6 mm 0.236 in spacing

Ordering details

Description	Number of markers per card	Color	Type	Part Number		Pkg card	Weight (1 pce) g
← Continuation of previous page							
Y (x100)	100	White ☐	MC612PA	1SNK156252R0000		1	11.00
Z (x100)	100	White ☐	MC612PA	1SNK156262R0000		1	11.00
0 (x100)	100	White ☐	MC612PA	1SNK157002R0000		1	11.00
1 (x100)	100	White ☐	MC612PA	1SNK157012R0000		1	11.00
2 (x100)	100	White ☐	MC612PA	1SNK157022R0000		1	11.00
3 (x100)	100	White ☐	MC612PA	1SNK157032R0000		1	11.00
4 (x100)	100	White ☐	MC612PA	1SNK157042R0000		1	11.00
5 (x100)	100	White ☐	MC612PA	1SNK157052R0000		1	11.00
6 (x100)	100	White ☐	MC612PA	1SNK157062R0000		1	11.00
7 (x100)	100	White ☐	MC612PA	1SNK157072R0000		1	11.00
8 (x100)	100	White ☐	MC612PA	1SNK157082R0000		1	11.00
9 (x100)	100	White ☐	MC612PA	1SNK157092R0000		1	11.00
+ (x100)	100	White ☐	MC612PA	1SNK158002R0000		1	11.00
- (x100)	100	White ☐	MC612PA	1SNK158012R0000		1	11.00
~ (x100)	100	White ☐	MC612PA	1SNK158022R0000		1	11.00
= (x100)	100	White ☐	MC612PA	1SNK158032R0000		1	11.00
⏚ (x100)	100	White ☐	MC612PA	1SNK158042R0000		1	11.00
L1 (x100)	100	White ☐	MC612PA	1SNK158052R0000		1	11.00
L2 (x100)	100	White ☐	MC612PA	1SNK158062R0000		1	11.00
L3 (x100)	100	White ☐	MC612PA	1SNK158072R0000		1	11.00
PE (x100)	100	White ☐	MC612PA	1SNK158092R0000		1	11.00
U1 (x100)	100	White ☐	MC612PA	1SNK158102R0000		1	11.00
U2 (x100)	100	White ☐	MC612PA	1SNK158112R0000		1	11.00
U3 (x100)	100	White ☐	MC612PA	1SNK158122R0000		1	11.00
V1 (x100)	100	White ☐	MC612PA	1SNK158132R0000		1	11.00
V2 (x100)	100	White ☐	MC612PA	1SNK158142R0000		1	11.00
V3 (x100)	100	White ☐	MC612PA	1SNK158152R0000		1	11.00
W1 (x100)	100	White ☐	MC612PA	1SNK158162R0000		1	11.00
W2 (x100)	100	White ☐	MC612PA	1SNK158172R0000		1	11.00
W3 (x100)	100	White ☐	MC612PA	1SNK158182R0000		1	11.00
+24V (x100)	100	White ☐	MC612PA	1SNK158192R0000		1	11.00
+48V (x100)	100	White ☐	MC612PA	1SNK158202R0000		1	11.00
- 24V (x100)	100	White ☐	MC612PA	1SNK158212R0000		1	11.00
-48V (x100)	100	White ☐	MC612PA	1SNK158222R0000		1	11.00
L1-L2-L3-N-PE (x20)	100	White ☐	MC612PA	1SNK159002R0000		1	11.00
U1-U2-U3-V1-V2-V3-W1-W2-W3 (x10) + U1 (x10)	100	White ☐	MC612PA	1SNK159012R0000		1	11.00

1SNK160008S0201 - Rev. A

MC812

HTP500-V2

MC812 terminal block markers

Description

- MC812 marker card in polycarbonate for high marking quality, durability and speed when marked with the HTP500 printer,
- Excellent marking durability in the most severe environments,
- Improved marking visibility thanks to the increased marking surface +20% (12 mm 0.472 in)

Main technical data

Material	Flammability	Maximum printed digits				Dimensions	
						mm	inches
Polycarbonate	V0	Horizontal	4	Vertical	8	7.6 x 12	0.299 x 0.472

Ordering details

Description	Number of markers per card	Color	Type	Part number		Pkg card	Weight (1 pce) g
Blank card	30	White	MC812	1SNK160000R0000		22	10.00
		Yellow	MC812-YL	1SNK160004R0000		22	10.00

MC812PA

AMS 600

MC812PA terminal block markers

Description

- MC812PA marker card in polyamide to be marked on AMS 600 marking table for medium scale volumes and standard industrial applications,
- Terminal blocks are directly independent after strip mounting,
- Improved marking visibility thanks to the increased marking surface +20% (12 mm 0.472 in)

Main technical data

Material	Flammability	Maximum printed digits				Dimensions	
						mm	inches
Polyamide	V2	Horizontal	3	Vertical	8	7.6 x 12	0.299 x 0.472

Ordering details

Description	Number of markers per card	Color	Type	Part number		Pkg card	Weight (1 pce) g
Blank card	100	White	MC812PA	1SNK169999R0000		20	14.00

Marking systems

Description	Type	Part number		Pkg qty	Weight (1 pce) g
AMS plotter	AMS 600 KIT	1SNA360000R2400		1	12600.00

Marking systems accessories

Description	Type	Part number		Pkg qty	Weight (1 pce) g
Marking support plate for MC PA marker cards (3 MC PA marker cards per plate)	SPRC 30-3	1SNA360039R1700		1	300.00

MC812PA terminal block markers

Pre-printed marker card for horizontal terminal block assembly

MC812PA

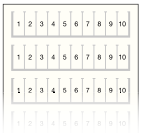

8 mm 0.315 in spacing

Description

Save printing time with our large pre-printed cards offer with pre-printed numbers, letters or symbols.

Main technical data

Material	Flammability	Dimensions mm	Dimensions inches
Polyamide	V2	7.6 x 12	0.299 x 0.472

Ordering details

Description	Number of markers per card	Color	Type	Part Number		Pkg card	Weight (1 pce) g
0->9 (x10)	100	White	MC812PA	1SNK160091R0000		1	14.00
1->10 (x10)	100	White	MC812PA	1SNK160011R0000		1	14.00
11->20 (x10)	100	White	MC812PA	1SNK160021R0000		1	14.00
21->30 (x10)	100	White	MC812PA	1SNK160031R0000		1	14.00
31->40 (x10)	100	White	MC812PA	1SNK160041R0000		1	14.00
41->50 (x10)	100	White	MC812PA	1SNK160051R0000		1	14.00
51->60 (x10)	100	White	MC812PA	1SNK160061R0000		1	14.00
61->70 (x10)	100	White	MC812PA	1SNK160071R0000		1	14.00
71->80 (x10)	100	White	MC812PA	1SNK160081R0000		1	14.00
81->90 (x10)	100	White	MC812PA	1SNK160083R0000		1	14.00
91->100 (x10)	100	White	MC812PA	1SNK160101R0000		1	14.00
101->110 (x10)	100	White	MC812PA	1SNK160111R0000		1	14.00
111->120 (x10)	100	White	MC812PA	1SNK160121R0000		1	14.00
121->130 (x10)	100	White	MC812PA	1SNK160131R0000		1	14.00
131->140 (x10)	100	White	MC812PA	1SNK160141R0000		1	14.00
141->150 (x10)	100	White	MC812PA	1SNK160151R0000		1	14.00
151->160 (x10)	100	White	MC812PA	1SNK160161R0000		1	14.00
161->170 (x10)	100	White	MC812PA	1SNK160171R0000		1	14.00
171->180 (x10)	100	White	MC812PA	1SNK160181R0000		1	14.00
181->190 (x10)	100	White	MC812PA	1SNK160191R0000		1	14.00
191->200 (x10)	100	White	MC812PA	1SNK160201R0000		1	14.00
1->100	100	White	MC812PA	1SNK165011R0000		1	14.00
101->200	100	White	MC812PA	1SNK165021R0000		1	14.00
201->300	100	White	MC812PA	1SNK165031R0000		1	14.00
301->400	100	White	MC812PA	1SNK165041R0000		1	14.00
401->500	100	White	MC812PA	1SNK165051R0000		1	14.00
501->600	100	White	MC812PA	1SNK165061R0000		1	14.00
601->700	100	White	MC812PA	1SNK165071R0000		1	14.00
701->800	100	White	MC812PA	1SNK165081R0000		1	14.00
801->900	100	White	MC812PA	1SNK165091R0000		1	14.00
A (x100)	100	White	MC812PA	1SNK166011R0000		1	14.00
B (x100)	100	White	MC812PA	1SNK166021R0000		1	14.00
C (x100)	100	White	MC812PA	1SNK166031R0000		1	14.00
D (x100)	100	White	MC812PA	1SNK166041R0000		1	14.00
E (x100)	100	White	MC812PA	1SNK166051R0000		1	14.00
F (x100)	100	White	MC812PA	1SNK166061R0000		1	14.00
G (x100)	100	White	MC812PA	1SNK166071R0000		1	14.00
H (x100)	100	White	MC812PA	1SNK166081R0000		1	14.00
I (x100)	100	White	MC812PA	1SNK166091R0000		1	14.00
J (x100)	100	White	MC812PA	1SNK166101R0000		1	14.00
K (x100)	100	White	MC812PA	1SNK166111R0000		1	14.00
L (x100)	100	White	MC812PA	1SNK166121R0000		1	14.00
M (x100)	100	White	MC812PA	1SNK166131R0000		1	14.00
N (x100)	100	White	MC812PA	1SNK166141R0000		1	14.00
O (x100)	100	White	MC812PA	1SNK166151R0000		1	14.00
P (x100)	100	White	MC812PA	1SNK166161R0000		1	14.00
Q (x100)	100	White	MC812PA	1SNK166171R0000		1	14.00
R (x100)	100	White	MC812PA	1SNK166181R0000		1	14.00
S (x100)	100	White	MC812PA	1SNK166191R0000		1	14.00
T (x100)	100	White	MC812PA	1SNK166201R0000		1	14.00
U (x100)	100	White	MC812PA	1SNK166211R0000		1	14.00
V (x100)	100	White	MC812PA	1SNK166221R0000		1	14.00

Continue on next page →

MC812PA terminal block markers

Pre-printed marker card for horizontal terminal block assembly

MC812PA

8 mm 0.315 in spacing

Ordering details

Description	Number of markers per card	Color	Type	Part Number		Pkg card	Weight (1 pce) g
← Continuation of previous page							
W (x100)	100	White ☐	MC812PA	1SNK166231R0000		1	14.00
X (x100)	100	White ☐	MC812PA	1SNK166241R0000		1	14.00
Y (x100)	100	White ☐	MC812PA	1SNK166251R0000		1	14.00
Z (x100)	100	White ☐	MC812PA	1SNK166261R0000		1	14.00
0 (x100)	100	White ☐	MC812PA	1SNK167001R0000		1	14.00
1 (x100)	100	White ☐	MC812PA	1SNK167011R0000		1	14.00
2 (x100)	100	White ☐	MC812PA	1SNK167021R0000		1	14.00
3 (x100)	100	White ☐	MC812PA	1SNK167031R0000		1	14.00
4 (x100)	100	White ☐	MC812PA	1SNK167041R0000		1	14.00
5 (x100)	100	White ☐	MC812PA	1SNK167051R0000		1	14.00
6 (x100)	100	White ☐	MC812PA	1SNK167061R0000		1	14.00
7 (x100)	100	White ☐	MC812PA	1SNK167071R0000		1	14.00
8 (x100)	100	White ☐	MC812PA	1SNK167081R0000		1	14.00
9 (x100)	100	White ☐	MC812PA	1SNK167091R0000		1	14.00
+ (x100)	100	White ☐	MC812PA	1SNK168001R0000		1	14.00
- (x100)	100	White ☐	MC812PA	1SNK168011R0000		1	14.00
~ (x100)	100	White ☐	MC812PA	1SNK168021R0000		1	14.00
= (x100)	100	White ☐	MC812PA	1SNK168031R0000		1	14.00
⏚ (x100)	100	White ☐	MC812PA	1SNK168041R0000		1	14.00
L1 (x100)	100	White ☐	MC812PA	1SNK168051R0000		1	14.00
L2 (x100)	100	White ☐	MC812PA	1SNK168061R0000		1	14.00
L3 (x100)	100	White ☐	MC812PA	1SNK168071R0000		1	14.00
PE (x100)	100	White ☐	MC812PA	1SNK168091R0000		1	14.00
U1 (x100)	100	White ☐	MC812PA	1SNK168101R0000		1	14.00
U2 (x100)	100	White ☐	MC812PA	1SNK168111R0000		1	14.00
U3 (x100)	100	White ☐	MC812PA	1SNK168121R0000		1	14.00
V1 (x100)	100	White ☐	MC812PA	1SNK168131R0000		1	14.00
V2 (x100)	100	White ☐	MC812PA	1SNK168141R0000		1	14.00
V3 (x100)	100	White ☐	MC812PA	1SNK168151R0000		1	14.00
W1 (x100)	100	White ☐	MC812PA	1SNK168161R0000		1	14.00
W2 (x100)	100	White ☐	MC812PA	1SNK168171R0000		1	14.00
W3 (x100)	100	White ☐	MC812PA	1SNK168181R0000		1	14.00
L1-L2-L3-N-PE (x20)	100	White ☐	MC812PA	1SNK169001R0000		1	14.00
U1-U2-U3-V1-V2-V3-W1-W2-W3 (x10) + U1 (x10)	100	White ☐	MC812PA	1SNK169011R0000		1	14.00

MC812PA terminal block markers

Pre-printed marker card for vertical terminal block assembly

MC812PA

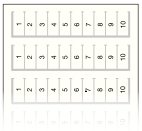

8 mm 0.315 in spacing

Description

Save printing time with our large pre-printed cards offer with pre-printed numbers, letters or symbols.

Main technical data

Material	Flammability	Dimensions mm	Dimensions inches
Polyamide	V2	7.6 x 12	0.299 x 0.472

Ordering details

Description	Number of markers per card	Color	Type	Part Number	Pkg card	Weight (1 pce) g
0->9 (x10)	100	White	MC812PA	1SNK160092R0000	1	14.00
1->10 (x10)	100	White	MC812PA	1SNK160012R0000	1	14.00
11->20 (x10)	100	White	MC812PA	1SNK160022R0000	1	14.00
21->30 (x10)	100	White	MC812PA	1SNK160032R0000	1	14.00
31->40 (x10)	100	White	MC812PA	1SNK160042R0000	1	14.00
41->50 (x10)	100	White	MC812PA	1SNK160052R0000	1	14.00
51->60 (x10)	100	White	MC812PA	1SNK160062R0000	1	14.00
61->70 (x10)	100	White	MC812PA	1SNK160072R0000	1	14.00
71->80 (x10)	100	White	MC812PA	1SNK160082R0000	1	14.00
81->90 (x10)	100	White	MC812PA	1SNK160084R0000	1	14.00
91->100 (x10)	100	White	MC812PA	1SNK160102R0000	1	14.00
101->110 (x10)	100	White	MC812PA	1SNK160112R0000	1	14.00
111->120 (x10)	100	White	MC812PA	1SNK160122R0000	1	14.00
121->130 (x10)	100	White	MC812PA	1SNK160132R0000	1	14.00
131->140 (x10)	100	White	MC812PA	1SNK160142R0000	1	14.00
141->150 (x10)	100	White	MC812PA	1SNK160152R0000	1	14.00
151->160 (x10)	100	White	MC812PA	1SNK160162R0000	1	14.00
161->170 (x10)	100	White	MC812PA	1SNK160172R0000	1	14.00
171->180 (x10)	100	White	MC812PA	1SNK160182R0000	1	14.00
181->190 (x10)	100	White	MC812PA	1SNK160192R0000	1	14.00
191->200 (x10)	100	White	MC812PA	1SNK160202R0000	1	14.00
1->100	100	White	MC812PA	1SNK165012R0000	1	14.00
101->200	100	White	MC812PA	1SNK165022R0000	1	14.00
201->300	100	White	MC812PA	1SNK165032R0000	1	14.00
301->400	100	White	MC812PA	1SNK165042R0000	1	14.00
401->500	100	White	MC812PA	1SNK165052R0000	1	14.00
501->600	100	White	MC812PA	1SNK165062R0000	1	14.00
601->700	100	White	MC812PA	1SNK165072R0000	1	14.00
701->800	100	White	MC812PA	1SNK165082R0000	1	14.00
801->900	100	White	MC812PA	1SNK165092R0000	1	14.00
901->1000	100	White	MC812PA	1SNK165102R0000	1	14.00
A (x100)	100	White	MC812PA	1SNK166012R0000	1	14.00
B (x100)	100	White	MC812PA	1SNK166022R0000	1	14.00
C (x100)	100	White	MC812PA	1SNK166032R0000	1	14.00
D (x100)	100	White	MC812PA	1SNK166042R0000	1	14.00
E (x100)	100	White	MC812PA	1SNK166052R0000	1	14.00
F (x100)	100	White	MC812PA	1SNK166062R0000	1	14.00
G (x100)	100	White	MC812PA	1SNK166072R0000	1	14.00
H (x100)	100	White	MC812PA	1SNK166082R0000	1	14.00
I (x100)	100	White	MC812PA	1SNK166092R0000	1	14.00
J (x100)	100	White	MC812PA	1SNK166102R0000	1	14.00
K (x100)	100	White	MC812PA	1SNK166112R0000	1	14.00
L (x100)	100	White	MC812PA	1SNK166122R0000	1	14.00
M (x100)	100	White	MC812PA	1SNK166132R0000	1	14.00
N (x100)	100	White	MC812PA	1SNK166142R0000	1	14.00
O (x100)	100	White	MC812PA	1SNK166152R0000	1	14.00
P (x100)	100	White	MC812PA	1SNK166162R0000	1	14.00
Q (x100)	100	White	MC812PA	1SNK166172R0000	1	14.00
R (x100)	100	White	MC812PA	1SNK166182R0000	1	14.00
S (x100)	100	White	MC812PA	1SNK166192R0000	1	14.00
T (x100)	100	White	MC812PA	1SNK166202R0000	1	14.00
U (x100)	100	White	MC812PA	1SNK166212R0000	1	14.00
V (x100)	100	White	MC812PA	1SNK166222R0000	1	14.00

Continue on next page →

MC812PA terminal block markers

Pre-printed marker card for vertical terminal block assembly

MC812PA

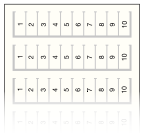

8 mm 0.315 in spacing

Ordering details

Description	Number of markers per card	Color	Type	Part Number		Pkg card	Weight (1 pce) g
← Continuation of previous page							
W (x100)	100	White	MC812PA	1SNK166232R0000		1	14.00
X (x100)	100	White	MC812PA	1SNK166242R0000		1	14.00
Y (x100)	100	White	MC812PA	1SNK166252R0000		1	14.00
Z (x100)	100	White	MC812PA	1SNK166262R0000		1	14.00
0 (x100)	100	White	MC812PA	1SNK167002R0000		1	14.00
1 (x100)	100	White	MC812PA	1SNK167012R0000		1	14.00
2 (x100)	100	White	MC812PA	1SNK167022R0000		1	14.00
3 (x100)	100	White	MC812PA	1SNK167032R0000		1	14.00
4 (x100)	100	White	MC812PA	1SNK167042R0000		1	14.00
5 (x100)	100	White	MC812PA	1SNK167052R0000		1	14.00
6 (x100)	100	White	MC812PA	1SNK167062R0000		1	14.00
7 (x100)	100	White	MC812PA	1SNK167072R0000		1	14.00
8 (x100)	100	White	MC812PA	1SNK167082R0000		1	14.00
9 (x100)	100	White	MC812PA	1SNK167092R0000		1	14.00
+ (x100)	100	White	MC812PA	1SNK168002R0000		1	14.00
- (x100)	100	White	MC812PA	1SNK168012R0000		1	14.00
~ (x100)	100	White	MC812PA	1SNK168022R0000		1	14.00
= (x100)	100	White	MC812PA	1SNK168032R0000		1	14.00
⏚ (x100)	100	White	MC812PA	1SNK168042R0000		1	14.00
L1 (x100)	100	White	MC812PA	1SNK168052R0000		1	14.00
L2 (x100)	100	White	MC812PA	1SNK168062R0000		1	14.00
L3 (x100)	100	White	MC812PA	1SNK168072R0000		1	14.00
PE (x100)	100	White	MC812PA	1SNK168092R0000		1	14.00
U1 (x100)	100	White	MC812PA	1SNK168102R0000		1	14.00
U2 (x100)	100	White	MC812PA	1SNK168112R0000		1	14.00
U3 (x100)	100	White	MC812PA	1SNK168122R0000		1	14.00
V1 (x100)	100	White	MC812PA	1SNK168132R0000		1	14.00
V2 (x100)	100	White	MC812PA	1SNK168142R0000		1	14.00
V3 (x100)	100	White	MC812PA	1SNK168152R0000		1	14.00
W1 (x100)	100	White	MC812PA	1SNK168162R0000		1	14.00
W2 (x100)	100	White	MC812PA	1SNK168172R0000		1	14.00
W3 (x100)	100	White	MC812PA	1SNK168182R0000		1	14.00
+24V (x100)	100	White	MC812PA	1SNK168192R0000		1	14.00
+48V (x100)	100	White	MC812PA	1SNK168202R0000		1	14.00
-24V (x100)	100	White	MC812PA	1SNK168212R0000		1	14.00
-48V (x100)	100	White	MC812PA	1SNK168222R0000		1	14.00
L1-L2-L3-N-PE (x20)	100	White	MC812PA	1SNK169002R0000		1	14.00
U1-U2-U3-V1-V2-V3-W1-W2-W3 (x10) + U1 (x10)	100	White	MC812PA	1SNK169012R0000		1	14.00

1SNK160011S0201 - Rev. A

5.2 mm 0.205 in spacing

Mounting instructions

Install the UMH on the terminal blocks (strip mounting) and slide on the wire markers.

UMH universal wire markers holder

Description

- Compatible with MG2 - TDMO wire markers and most of the wire markers available on the market (wire markers not supplied with UMH);
- Quickly put it on any SNK terminal blocks and accessories: strip mounting of 10 parts for 5.2 mm 0.205 in spacing, unitary mounting for other spacings.

Ordering details

Description	Color	Type	Part Number		Pkg qty	Weight (1 pce) g
5.2 mm 0.205 in spacing	Grey	UMH	1SNK900611R0000		10	0.20

Main technical data

Material specifications	Insulating material	Polyamide	
	Flammability	V0	
	NF F 16 101	I2F2	
Ambient temperature min/max	Service IEC 60068-2-1	-55 ... +110 °C	-67 ... +230 °F
	Storage	-55 ... +110 °C	-67 ... +230 °F
	Installing	-5 ... +40 °C	-23 ... +104 °F

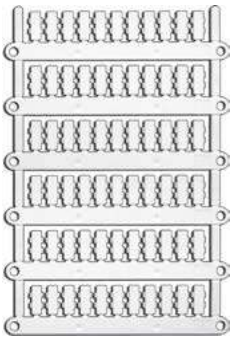

1SNC160118F0014

MG2-TDMO

MG2-TDMO clip-on blank wire marker

Description

- Rigid Polycarbonate marker to be directly printed and snaped on the wire or the UMH wire marker holder,
- Print with support plate MG2-PTM.

Main technical data

Material	Flammability	Temperature range	
PC	V0	-40°C ... +140°C, - 22°F ... +176°F	

Ordering details

Dimensions mm	Dimensions in	Number of markers per card	Color	Type	Part Number	SW code		Pkg qty	Weight (1 pce) g
MG2-TDMO-01									
4 x 12	0.157 x 0.472	40	White	MG2-TDMO-01 40390	1SNB040390R0412	125		880	0.30
4 x 16	0.157 x 0.630	40	White	MG2-TDMO-01 40391	1SNB040391R0416	128		880	0.30
4 x 12	0.157 x 0.472	40	Yellow	MG2-TDMO-01 40340	1SNB040340R0412	125		800	0.30
4 x 16	0.157 x 0.630	40	Yellow	MG2-TDMO-01 40341	1SNB040341R0416	128		800	0.30
MG2-TDMO-02									
4 x 12	0.157 x 0.472	40	White	MG2-TDMO-02 40490	1SNB040490R0412	126		640	0.40
4 x 16	0.157 x 0.630	40	White	MG2-TDMO-02 40491	1SNB040491R0416	129		640	0.40
4 x 12	0.157 x 0.472	40	Yellow	MG2-TDMO-02 40440	1SNB040440R0412	126		640	0.40
4 x 16	0.157 x 0.630	40	Yellow	MG2-TDMO-02 40441	1SNB040441R0416	129		640	0.40
MG2-TDMO-03									
4 x 12	0.157 x 0.472	40	White	MG2-TDMO-03 40590	1SNB040590R0412	127		560	0.40
4 x 16	0.157 x 0.630	40	White	MG2-TDMO-03 40591	1SNB040591R0416	130		560	0.40
4 x 12	0.157 x 0.472	40	Yellow	MG2-TDMO-03 40540	1SNB040540R0412	127		560	0.40
4 x 16	0.157 x 0.630	40	Yellow	MG2-TDMO-03 40541	1SNB040541R0416	130		560	0.40

Marking system

MG3 KIT	●	AMS 250		AMS 600		HTP500	

Description	Support status	Type	Part Number			Pkg qty	Weight (1 pce) g
Support plate							
Support plate for cable tags MG2-TDMO & MG-TDM 4x16mm	Purchased separately	MG2-PTM 991010	1SNB991010R0000			1	116.00

MG3 KIT

MG-TAR

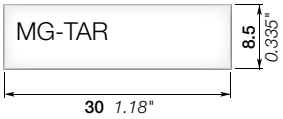

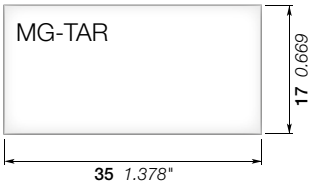

MG-TAR markers for components

Description

Identify your terminal blocks assembly with the precut blank label adapted to the LH label holders.

Ordering details

Description	Nb. of markers per card	Nb. of card by package	Color	Type	Part Number	SW code		Pkg marker	Weight 1 marker g
For LH label holder	33	50	White	MG-TAR 45490	1SNB045490R8530	720		1650	0.371
For LH-R1 label holder	18	50		MG-TAR 45194	1SNB045194R1735	711		900	0.628

Main technical data

Material specifications	Insulating material	Rigid PVC	
	Flammability	V0	
	NF F 16 101		
Ambient temperature min/max	Service IEC 60068-2-1	-30 ... +80 °C	-22 ... +176 °F
	Storage	-30 ... +80 °C	-22 ... +176 °F
	Installing	+10 ... +40 °C	+50 ... +104 °F

MG-TAA

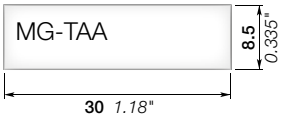

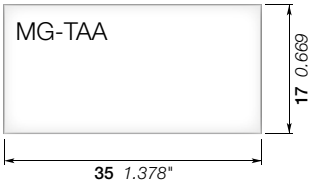

MG-TAA markers for components

Description

Identify your terminal blocks assembly with the self adhesive label adapted to the LH label holders.

Ordering details

Description	Nb. of markers per card	Nb. of card by package	Color	Type	Part Number	SW code		Pkg marker	Weight 1 marker g
For LH label holder	33	25	White	MG-TAA 49498	1SNB049498R8530	33		825	0.55
	33	25	Yellow	MG-TAA 49448	1SNB049448R8530	33		825	0.55
For LH-R1 label holder	18	25	White	MG-TAA 49198	1SNB049198R1735	711		450	0.91
	18	25	Yellow	MG-TAA 49148	1SNB049148R1735	711		450	0.91

Main technical data

Material specifications	Insulating material	Rigid PVC	
	Flammability	V0	
	NF F 16 101		
Ambient temperature min/max	Service IEC 60068-2-1	-30 ... +80 °C	-22 ... +176 °F
	Storage	-30 ... +80 °C	-22 ... +176 °F
	Installing	+10 ... +40 °C	+50 ... +104 °F

Marking system & accessories

Description	Color	Type	Part Number		Pkg qty	Weight (1 pce) g
Thermal transfer printer	Grey	MG3 KIT	1SNB419001R0000		1	12600

1SNK160099S0201

MG-TAPW

MG-TAPW markers for components

Description

Identify your terminal blocks assembly with the precut blank label adapted to the LH label holders.

Ordering details

Description	Nb. of markers per card	Nb. of card by package	Color	Type	Part Number	SW code		Pkg marker	Weight 1 marker g
For LH label holder	30	50	White	MG-TAPW 49096	1SNB049096R0929	363		1500	0.30
	30	50	Yellow	MG-TAPW 49046	1SNB049046R0929	363		1500	0.30

Main technical data

Material specifications	Insulating material	Rigid PVC	
	Flammability	V0	
	NF F 16 101		
Ambient temperature min/max	Service IEC 60068-2-1	-30 ... +80 °C	-22 ... +176 °F
	Storage	-30 ... +80 °C	-22 ... +176 °F
	Installing	+10 ... +40 °C	+50 ... +104 °F

Marking system & accessories

Description	Color	Type	Part Number		Pkg qty	Weight (1 pce) g
Thermal transfer printer	Grey	MG3 KIT	1SNB419001R0000		1	12600

1SNK160100S0201

6

MCLH

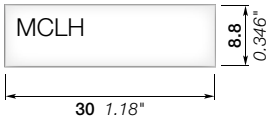

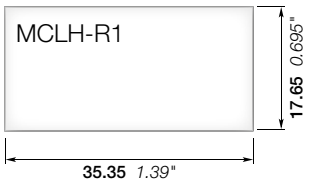

MCLH label

Description

Identify your terminal blocks assembly with the self adhesive label adapted to the LH label holders.

Ordering details

Description	Nb. of markers per card	Nb. of card by package	Color	Type	Part Number	SW code		Pkg card	Weight 1 card g
For LH label holder	36	25	White	MCLH	1SNK900630R0000			25	10.00
			Yellow	MCLH-YL	1SNK900633R0000			25	10.00
For LH-R1 label holder	15	25	White	MCLH-R1	1SNK900631R0000			25	10.00
			Yellow	MCLH-R1-YL	1SNK900634R0000			25	10.00

Main technical data

Material specifications	Insulating material	PVC + adhesive acrylic	
	Flammability	V0	
	NF F 16 101		
Ambient temperature min/max	Service IEC 60068-2-1	-55 ... +110 °C	-67 ... +230 °F
	Storage	-55 ... +110 °C	-67 ... +230 °F
	Installing	-5 ... +40 °C	+23 ... +104 °F

1

2

Marking system & accessories

Description	Color	Type	Part Number		Pkg qty	Weight (1 pce) g
1 Plotter		AMS 600 KIT	1SNA360000R2400		1	12600.00
2 Support plate for AMS		SPRC 21	1SNA360031R0600		1	851.00

Complete list of accessories is indicated in the terminal block datasheet including end stops.
Some accessories such as jumper bars may modify the terminal block's ratings: Complete information available in the accessories section of the catalog.

HTP500-CLEAN

HTP500-FEED

HTP500-PL2

RIB-B

Feeders and support plates

Description	Color	Type	Part Number		Pkg qty	Weight (1 pce) g
Universal feeder for marker cards		HTP500-FEED	1SNA235703R0400		1	
Support plate for TE Connectivity terminal block markers		HTP500-PL2	1SNA235705R0600		1	
Universal support plate for wire markers		HTP500-PL	1SNA235704R0500		1	

Accessories

Description	Color	Type	Part Number		Pkg qty	Weight (1 pce) g
Black ribbon cassette		RIB-B	1SNA235710R0600		3	
Red ribbon cassette for identification plates and adhesive labels		RIB-R	1SNA235711R2300		3	
Red ribbon cassette for terminal blocks and wire markers		RIB-RS	1SNA235718R0200		3	
Cleaning cassette		HTP500-CLEAN	1SNA235714R2600		1	
Standard cleaning roll ø18		HTP500-ROLL	1SNA235715R2700		1	
Printing head		HTP500-PRINT	1SNA235716R2000		1	
Dust cover for HTP500 and AMS 600 systems		DUST COVER	1SNA360161R1500		1	
Wooden box for HTP500-V2 KIT		HTP500-WB	1SNA235717R2100		1	
Software CD		HTS500	1SNA235702R0300		1	
Support table		HTP500-BAS	1SNA235706R0700		1	
Power supply cable		HTP500-PW	1SNA235709R1200		1	

1SNK160015S0201 - Rev. A

MG3 thermal transfer printer
Kit and accessories

MG3 KIT

Description

- Versatile,
- Compact and robust,
- Easy to install and use.

Ordering details

Description	Color	Type	Part Number		Pkg pce	Weight (1 pce) g
MG3 Thermal transfer printer KIT		MG3 KIT	1SNB419001R0000		1	12600.00
List of items included in the KIT:						
1 MG3 Thermal transfer printer		MG3				
1 Software CD		MG3 SOFTWARE				
1 Power supply cable		MG3 POWER				
1 USB cable		MG3 USB				
1 Protective cover		MG2 COVE 991680				
1 Ribbon take up spool		MG2-CRB 991654				
1 Black monochrome ribbon		MG2-ETR 991600				
1 Support plate for cable tags MG-TPM		MG2-PWC 991000				
1 Support plate for labels, cables, plates and various markers		MG2-PLT 991002				
1 Support plate for terminal block markers MG-CPM-01(5x10 and 5x15),02,03,04,07		MG2-QTB 991011				
1 Support plate for SNK series terminal block markers (MG-CPM-13)		MG2-ETB 991016				

Support plate MG2-...

Support plates

Description	Color	Type	Part Number		Pkg pce	Weight (1 pce) g
Support template for:						
Cable tags MG-TPM		MG2-PWC 991000	1SNB991000R0000		1	148.00
Labels, cable tags, plates and various markers		MG2-PLT 991002	1SNB991002R0000		1	148.00
Terminal block markers MG-CPM-05,12		MG2-WTB 991004	1SNB991004R0000		1	151.00
Terminal block markers MG-CPM-06		MG2-STB 991005	1SNB991005R0000		1	158.00
Terminal block markers MG-CPM-10		MG2-CTB 991006	1SNB991006R0000		1	156.00
Cable tags MG-TDM (4x12 mm)		MG2-PTD 991007	1SNB991007R0000		1	126.00
Terminal block markers MG-CPM-01 (5x7 mm)		MG2-MTB 991008	1SNB991008R0000		1	149.00
Cable tags MG2-TDMO and MG-TDM (4x16 mm)		MG2-PTM 991010	1SNB991010R0000		1	116.00
Terminal block markers MG-CPM-01 (5x10 and 5x15 mm),02,03,04,07		MG2-QTB 991011	1SNB991011R0000		1	120.00
Terminal block markers TE Connectivity RC and MC series		MG2-ABM 991012	1SNB991012R0000		1	146.00
Terminal block markers MG-CPM-09		MG2-LTB 991013	1SNB991013R0000		1	128.00
Terminal block markers SNK series MG-CPM-13		MG2-ETB 991016	1SNB991016R0000		1	100.00

PET blank cover for support plate

Description	Color	Type	Part Number		Pkg pce	Weight (1 pce) g
PET blank for support plate MG2-PWC		MG2-TWC 991502	1SNB991502R0000		3	16.70
PET blank for support plate MG2-PLT		MG2-TLT 991522	1SNB991522R0000		3	14.70
PET blank for support plate MG2-PTD		MG2-TTD 991563	1SNB991563R0000		3	11.70
PET blank for support plate MG2-MTB		MG2-TMT 991513	1SNB991513R0000		3	12.00
PET blank for support plate MG2-WTB		MG2-TWT 991542	1SNB991542R0000		3	12.00
PET blank for support plate MG2-STB		MG2-TST 991552	1SNB991552R0000		3	21.50
PET blank for support plate MG2-CTB		MG2-TCT 991562	1SNB991562R0000		3	12.00
PET blank for support plate MG2-QTB		MG2-TGT 991532	1SNB991532R0000		3	11.70
PET blank for support plate MG2-ETB		MG2-TTB 991512	1SNB991512R0000		3	10.70

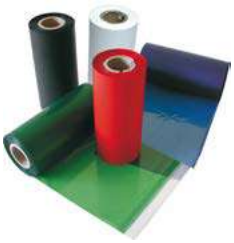

Ribbons MG2-ETR...

Accessories

Description	Color	Type	Part Number		Pkg pce	Weight (1 pce) g
Print head cleaning kit		MG2-CKP 991670	1SNB991670R0000		1	336.00
Black monochrome ribbon	Black	MG2-ETR 991600	1SNB991600R0000		1	227.00
Blue monochrome ribbon	Blue	MG2-ETR 991601	1SNB991601R0000		1	229.00
Red monochrome ribbon	Red	MG2-ETR 991602	1SNB991602R0000		1	255.00
Green monochrome ribbon	Green	MG2-ETR 991603	1SNB991603R0000		1	247.00
White monochrome ribbon	White	MG2-ETR 991606	1SNB991606R0000		1	333.00

1SNC160112S0201 - Rev. A

AMS 600

AMS 600

Description

- For basic marking applications,
- Economic,
- Full-size format,
- Print original manufacturers' markers.

Ordering details

Description	Color	Type	Part Number		Pkg pce	Weight (1 pce) g
AMS 600 Plotter KIT		AMS 600 KIT	1SNA360000R2400		1	12600
List of items included in the KIT:						
1 AMS 600 plotter pen printer		AMS 600				
1 Software CD		AMS SOFTWARE				
1 Power supply cable		AMS POWER				
1 USB cable		AMS USB				
1 Support plate for RC / MC / RCTT / WMTT / BA4 / RCT		SPRC1				
1 Support plate for MC...PA		SPRC 30-3				
1 Plotter pen Ø 0.25 mm .01 in		AMS PEN 0.25				
1 Plotter pen Ø 0.35 mm .014 in		AMS PEN 0.35				
5 Ink cartridges		AMS INK CARTRIDGES				
1 Cleaner fluid		AMS CLEANER FLUID				
1 Cleaner kit		AMS CLEANER KIT				

AMS 250

AMS 250

Description

- Basic needs,
- Economic,
- Half-size format
- Compatible with most of AMS 600 accessories.

Ordering details

Description	Color	Type	Part Number		Pkg pce	Weight (1 pce) g
AMS 250 Plotter KIT		AMS 250 BASIC KIT	1SNA360000R2500		1	8800
List of items included in the KIT:						
1 AMS 250 plotter pen printer		AMS 250 BASIC				
1 Software CD		AMS SOFTWARE				
1 Power supply cable		AMS POWER				
1 USB cable		AMS USB				
1 Support plate for BA4 / MC / RC / RCAL / RCT / RCTT		SPRC2				
1 Disposable plotter pen Ø 0.25 mm .01 in EDR ink		DISPOSABLE AMS PEN ED-R 0.25				
1 Disposable plotter pen Ø 0.35 mm .014 in EDR ink		DISPOSABLE AMS PEN ED-R 0.35				

1SNC160110S0201

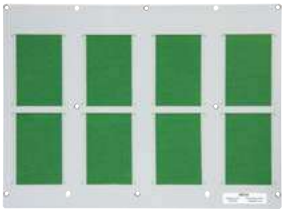

SPRC1

SPRC2

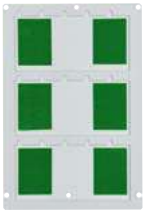

SPRC30-3

AMS PEN

AMS CLEANER KIT

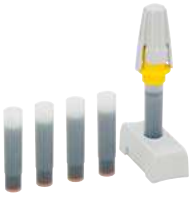

AMS INK CARTRIDGES

Support plates for TE Connectivity markers

Description	Compatibility AMS 500 AMS 600	Compatibility AMS 250	Type	Part Number		Pkg pce	Weight (1 pce) g
Support plates for:							
RC/MC/RCTT/WMTT/BA4/RCT full format	●		SPRC 1	1SNA360010R1500		1	1500.00
RC/MC/RCTT/WMTT/BA4/RCT		●	SPRC 2	1SNA360011R1500		1	600.00
RB strips	●	●	SPRC 4	1SNA360014R0500		1	300.00
RTM7-9	●		SPRC 5	1SNA360015R0600		1	1700.00
PIB	●	●	SPRC 13	1SNA360023R0600		1	260.00
BA5-50	●	●	SPRC 14	1SNA360024R0700		1	300.00
RC-X10A	●	●	SPRC 15	1SNA360025R0000		1	300.00
2 RC cards	●	●	SPRC 16	1SNA360026R0100		1	300.00
WM markers	●	●	SPRC 26	1SNA360036R0300		1	300.00
PAM strip	●		SPRC 27	1SNA360037R0400		1	300.00
RPCV markers	●	●	SPRC 28	1SNA360040R2300		1	300.00
RCL, P, W510	●	●	SPRC 29	1SNA360038R1500		1	300.00
MC... PA	●	●	SPRC 30-3	1SNA360039R1700		1	500.00
A4 universal support plate	●	●	SPRC 21	1SNA360031R0600		1	500.00

Support plates for other manufacturers

Description	Compatibility AMS 500 AMS 600	Compatibility AMS 250	Type	Part Number		Pkg pce	Weight (1 pce) g
Support plates for markers:							
Wieland	●	●	SPRC 6	1SNA360016R0700		1	350.00
Weidmüller	●	●	SPRC 7	1SNA360017R0000		1	400.00
Phoenix ZBM 5/6	●	●	SPRC 8	1SNA360018R1100		1	300.00
Phoenix ZB	●	●	SPRC 9	1SNA360019R1200		1	300.00
Allen Bradley WRZ	●	●	SPRC 10	1SNA360020R1700		1	330.00
Wago mini WSB5	●	●	SPRC 11	1SNA360021R0400		1	300.00

Accessories

Description		Diameter Color	Type	Part Number		Pkg pce	Weight (1 pce) g
Plotter pen P 2.0 black ink	Ø 0.18 mm 0.007 in	Red	AMS PEN 0.18	1SNA360103R1400		1	15.00
	Ø 0.25 mm 0.01 in	White	AMS PEN 0.25	1SNA360100R2500		1	15.00
	Ø 0.35 mm 0.014 in	Yellow	AMS PEN 0.35	1SNA360101R1200		1	15.00
	Ø 0.50 mm 0.02 in	Brown	AMS PEN 0.50	1SNA360104R1500		1	26.00
	Ø 0.70 mm 0.028 in	Blue	AMS PEN 0.70	1SNA360105R1600		1	26.00
	Ø 1.00 mm 0.039 in	Orange	AMS PEN 1.00	1SNA360106R1700		1	26.00
Disposable plotter pen P 2.0 black ink	Ø 0.25 mm 0.01 in	White	DISPOSABLE AMS PEN 0.25	1SNA360120R1000		1	24.00
	Ø 0.35 mm 0.014 in	Yellow	DISPOSABLE AMS PEN 0.35	1SNA360121R0500		1	24.00
Disposable plotter pen ED-R black ink	Ø 0.18 mm 0.007 in	Red	DISPOSABLE AMS PEN ED-R 0.18	1SNA360124R1000		1	24.00
	Ø 0.25 mm 0.01 in	White	DISPOSABLE AMS PEN ED-R 0.25	1SNA360122R1000		1	24.00
	Ø 0.35 mm 0.014 in	Yellow	DISPOSABLE AMS PEN ED-R 0.35	1SNA360123R0500		1	24.00
5 ink cartridges 1 ml			AMS INK CARTRIDGES	1SNA360150R2600		1	18.00
2 cleaner fluid bottles, 2x10 ml			AMS CLEANER FLUID	1SNA360155R1700		1	40.00
Cleaner kit including: 1 rinse bottle and 1 blotting paper			AMS CLEANER KIT	1SNA360156R1000		1	34.00
Dust cover			DUST COVER	1SNA360161R1500		1	200.00
Service kit for pen maintenance			SERVICE KIT FOR AMS 500	1SNA360162R1600		1	12.00
Self-adhesive support for support plate SPRC 1			SPDST1	1SNA360163R1700		1	70.00
Plotter head for AMS 500 including 1 printing module, 1 pen holder and 1 dust cover			PEN HOLDER	1SNA360098R1200		1	85.00

1SNC160111S0201 - Rev. A

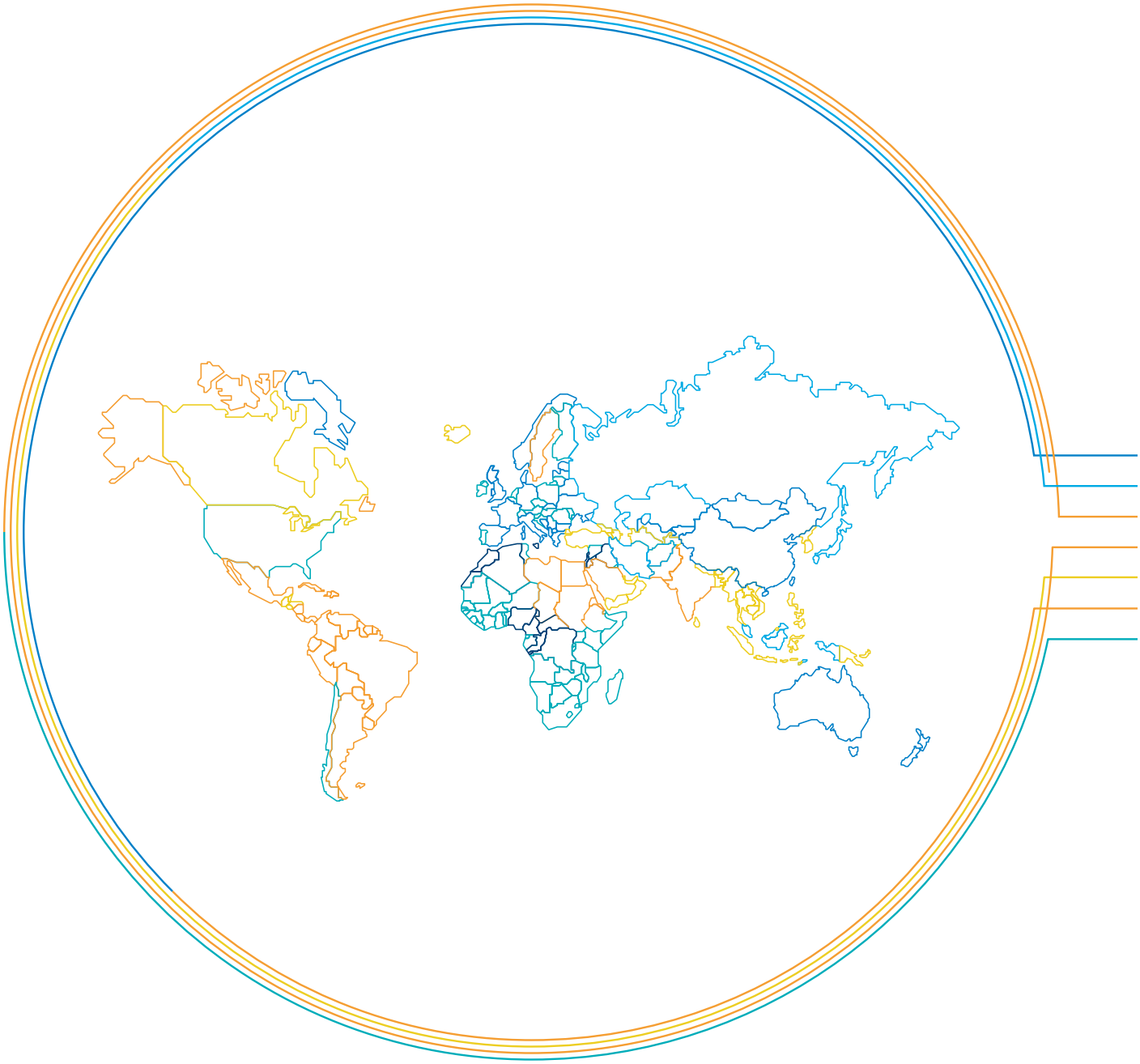

6

PB-217

Index
Part Number classification

Part Number	Type	Page
1SNA113542R1000	PC5-2	105
1SNA113544R1200	PC5-10	105
1SNA116538R1700	PC8-2	226
1SNA116539R1000	PC8-3	226
1SNA116540R2500	PC8-4	226
1SNA163313R2400	PC8-10	155
1SNA164800R0300	PR3.G2	197
1SNA168500R1200	PR4	198
1SNA168672R1100	TGA8	120
1SNA168673R1200	TGA8	120
1SNA168674R1300	TGA8	120
1SNA168675R1400	ANT	120
1SNA168700R2200	PR5	198
1SNA173220R0500	PR30	196
1SNA173523R1100	PC81-10	120
1SNA174300R1700	PR3.Z2	196
1SNA178430R0500	RCPEB	201
1SNA178431R2200	EPR1	201
1SNA178529R0400	PR50	197
1SNA179371R1600	CN5	120
1SNA179726R0200	AJS9	152
1SNA206053R0700	BJMI31.2	91
1SNA206054R0000	BJMI31.3	91
1SNA206126R2500	BJMI36.2	92
1SNA206223R0600	BJMI36.3	92
1SNA206680R1500	AJS9-BK	154
1SNA206681R0200	AJS9-GN	154
1SNA206682R0300	AJS9-GR	154
1SNA206683R0400	AJS9-BL	154
1SNA206720R1400	AJS9-RD	154
1SNA206721R0100	AL4-M3	152
1SNA206765R0000	AJS9-WH	154
1SNA206772R0000	AJS9-PR	154
1SNA206782R0000	AJS9-BR	154
1SNA235106R2600	PAM43020	230
1SNA235155R2600	PIB2-TT	201
1SNA235157R2000	PIB2-TT-YL	201
1SNA235158R0100	RCPEAD-TT	201
1SNA235159R0200	RCPEAD-TT-YL	201
1SNA235702R0300	HTS500	265
1SNA235703R0400	HTP500-FEED	265
1SNA235704R0500	HTP500-PL	265
1SNA235705R0600	HTP500-PL2	265
1SNA235706R0700	HTP500-BAS	265
1SNA235709R1200	HTP500-PW	265
1SNA235710R0600	RIB-B	265
1SNA235711R2300	RIB-R	265
1SNA235714R2600	HTP500-CLEAN	265
1SNA235715R2700	HTP500-ROLL	265
1SNA235716R2000	HTP500-PRINT	265
1SNA235717R2100	HTP500-WB	265
1SNA235718R0200	RIB-RS	265
1SNA238000R1600	RC1010	91
1SNA360000R2400	AMS 600 KIT	245
1SNA360000R2500	AMS 250 BASIC KIT	267
1SNA360010R1500	SPRC 1	268
1SNA360011R1500	SPRC 2	268
1SNA360014R0500	SPRC 4	268
1SNA360015R0600	SPRC 5	268
1SNA360016R0700	SPRC 6	268
1SNA360017R0000	SPRC 7	268
1SNA360018R1100	SPRC 8	268
1SNA360019R1200	SPRC 9	268
1SNA360020R1700	SPRC 10	268
1SNA360021R0400	SPRC 11	268
1SNA360023R0600	SPRC 13	268
1SNA360024R0700	SPRC 14	268
1SNA360025R0000	SPRC 15	268
1SNA360026R0100	SPRC 16	268
1SNA360031R0600	SPRC 21	264
1SNA360036R0300	SPRC 26	268
1SNA360037R0400	SPRC 27	268
1SNA360038R1500	SPRC 29	268
1SNA360039R1700	SPRC 30-3	245
1SNA360040R2300	SPRC 28	268
1SNA360098R1200	PEN HOLDER	268
1SNA360100R2500	AMS PEN 0.25	268
1SNA360101R1200	AMS PEN 0.35	268
1SNA360103R1400	AMS PEN 0.18	268
1SNA360104R1500	AMS PEN 0.50	268
1SNA360105R1600	AMS PEN 0.70	268
1SNA360106R1700	AMS PEN 1.00	268
1SNA360120R1000	DISPOSABLE AMS PEN 0.25	268
1SNA360121R0500	DISPOSABLE AMS PEN 0.35	268
1SNA360122R1000	DISPOSABLE AMS PEN ED-R 0.25	268
1SNA360123R0500	DISPOSABLE AMS PEN ED-R 0.35	268
1SNA360124R1000	DISPOSABLE AMS PEN ED-R 0.18	268
1SNA360150R2600	AMS INK CARTRIDGES	268
1SNA360155R1700	AMS CLEANER FLUID	268

Part Number	Type	Page
1SNA360156R1000	AMS CLEANER KIT	268
1SNA360161R1500	DUST COVER	265
1SNA360162R1600	SERVICE KIT FOR AMS 500	268
1SNA360163R1700	SPDST1	268
1SNA399726R0700	EPR2	201
1SNA399787R0500	CPBP2	92
1SNA399788R1600	CPBP1	91
1SNA400711R0600	PC8-R1	153
1SNA400712R0700	PC8-R2	155
1SNA400713R0000	PC8-R3	155
1SNA400724R0300	PC8-R4	155
1SNA400842R0000	PC8-R5	155
1SNA400843R0000	PC8-R6	155
1SNA400849R0000	PC8-R7	155
1SNA400850R0000	PC8-R8	155
1SNB040340R0412	MG2-TDMO-01 40340	261
1SNB040341R0416	MG2-TDMO-01 40341	261
1SNB040390R0412	MG2-TDMO-01 40390	261
1SNB040391R0416	MG2-TDMO-01 40391	261
1SNB040440R0412	MG2-TDMO-02 40440	261
1SNB040441R0416	MG2-TDMO-02 40441	261
1SNB040490R0412	MG2-TDMO-02 40490	261
1SNB040491R0416	MG2-TDMO-02 40491	261
1SNB040540R0412	MG2-TDMO-03 40540	261
1SNB040541R0416	MG2-TDMO-03 40541	261
1SNB040590R0412	MG2-TDMO-03 40590	261
1SNB040591R0416	MG2-TDMO-03 40591	261
1SNB041740R0512	MG-CPM 13 41740	244
1SNB041741R0612	MG-CPM 13 41741	250
1SNB041790R0512	MG-CPM 13 41790	21
1SNB041791R0612	MG-CPM 13 41791	30
1SNB043196R0012	MG-CPMFA 43196	185
1SNB045194R1735	MG-TAR 45194	201
1SNB045490R8530	MG-TAR 45490	201
1SNB046415R0615	MG-VYT 46415	217
1SNB046915R0615	MG-VYT 46915	217
1SNB049046R0929	MG-TAPW 49046	263
1SNB049096R0929	MG-TAPW 49096	263
1SNB049148R1735	MG-TAA 49148	201
1SNB049198R1735	MG-TAA 49198	201
1SNB049448R8530	MG-TAA 49448	201
1SNB049498R8530	MG-TAA 49498	201
1SNB419001R0000	MG3 KIT	244
1SNB991000R0000	MG2-PWC 991000	266
1SNB991002R0000	MG2-PLT 991002	266
1SNB991004R0000	MG2-WTB 991004	266
1SNB991005R0000	MG2-STB 991005	266
1SNB991006R0000	MG2-CTB 991006	266
1SNB991007R0000	MG2-PTD 991007	266
1SNB991008R0000	MG2-MTB 991008	266
1SNB991010R0000	MG2-PTM 991010	261
1SNB991011R0000	MG2-QTB 991011	266
1SNB991012R0000	MG2-ABM 991012	266
1SNB991013R0000	MG2-LTB 991013	266
1SNB991016R0000	MG2-ETB 991016	244
1SNB991502R0000	MG2-TWC 991502	266
1SNB991512R0000	MG2-TTB 991512	266
1SNB991513R0000	MG2-TMT 991513	266
1SNB991522R0000	MG2-TLT 991522	266
1SNB991532R0000	MG2-TGT 991532	266
1SNB991542R0000	MG2-TWT 991542	266
1SNB991552R0000	MG2-TST 991552	266
1SNB991562R0000	MG2-TCT 991562	266
1SNB991563R0000	MG2-TTD 991563	266
1SNB991600R0000	MG2-ETR 991600	266
1SNB991601R0000	MG2-ETR 991601	266
1SNB991602R0000	MG2-ETR 991602	266
1SNB991603R0000	MG2-ETR 991603	266
1SNB991606R0000	MG2-ETR 991606	266
1SNB991670R0000	MG2-CKP 991670	266
1SNK140000R0000	MC512	21
1SNK140004R0000	MC512-YL	244
1SNK140011R0000	MC512PA	246
1SNK140012R0000	MC512PA	248
1SNK140021R0000	MC512PA	246
1SNK140022R0000	MC512PA	248
1SNK140031R0000	MC512PA	246
1SNK140032R0000	MC512PA	248
1SNK140041R0000	MC512PA	246
1SNK140042R0000	MC512PA	248
1SNK140051R0000	MC512PA	246
1SNK140052R0000	MC512PA	248
1SNK140061R0000	MC512PA	246
1SNK140062R0000	MC512PA	248
1SNK140071R0000	MC512PA	246
1SNK140072R0000	MC512PA	248
1SNK140081R0000	MC512PA	246
1SNK140082R0000	MC512PA	248
1SNK140083R0000	MC512PA	246

Part Number	Type	Page
1SNK140084R0000	MC512PA	248
1SNK140091R0000	MC512PA	246
1SNK140092R0000	MC512PA	248
1SNK140101R0000	MC512PA	246
1SNK140102R0000	MC512PA	248
1SNK140111R0000	MC512PA	246
1SNK140112R0000	MC512PA	248
1SNK140121R0000	MC512PA	246
1SNK140122R0000	MC512PA	248
1SNK140131R0000	MC512PA	246
1SNK140132R0000	MC512PA	248
1SNK140141R0000	MC512PA	246
1SNK140142R0000	MC512PA	248
1SNK140151R0000	MC512PA	246
1SNK140152R0000	MC512PA	248
1SNK140161R0000	MC512PA	246
1SNK140162R0000	MC512PA	248
1SNK140171R0000	MC512PA	246
1SNK140172R0000	MC512PA	248
1SNK140181R0000	MC512PA	246
1SNK140182R0000	MC512PA	248
1SNK140191R0000	MC512PA	246
1SNK140192R0000	MC512PA	248
1SNK140201R0000	MC512PA	246
1SNK140202R0000	MC512PA	248
1SNK145011R0000	MC512PA	246
1SNK145012R0000	MC512PA	248
1SNK145021R0000	MC512PA	246
1SNK145022R0000	MC512PA	248
1SNK145031R0000	MC512PA	246
1SNK145032R0000	MC512PA	248
1SNK145041R0000	MC512PA	246
1SNK145042R0000	MC512PA	248
1SNK145051R0000	MC512PA	246
1SNK145052R0000	MC512PA	248
1SNK145061R0000	MC512PA	246
1SNK145062R0000	MC512PA	248
1SNK145071R0000	MC512PA	246
1SNK145072R0000	MC512PA	248
1SNK145081R0000	MC512PA	246
1SNK145082R0000	MC512PA	248
1SNK145091R0000	MC512PA	246
1SNK145092R0000	MC512PA	248
1SNK145102R0000	MC512PA	248
1SNK146011R0000	MC512PA	246
1SNK146012R0000	MC512PA	248
1SNK146021R0000	MC512PA	246
1SNK146022R0000	MC512PA	248
1SNK146031R0000	MC512PA	246
1SNK146032R0000	MC512PA	248
1SNK146041R0000	MC512PA	246
1SNK146042R0000	MC512PA	248
1SNK146051R0000	MC512PA	246
1SNK146052R0000	MC512PA	248
1SNK146061R0000	MC512PA	246
1SNK146062R0000	MC512PA	248
1SNK146071R0000	MC512PA	246
1SNK146072R0000	MC512PA	248
1SNK146081R0000	MC512PA	246
1SNK146082R0000	MC512PA	248
1SNK146091R0000	MC512PA	246
1SNK146092R0000	MC512PA	248
1SNK146101R0000	MC512PA	246
1SNK146102R0000	MC512PA	248
1SNK146111R0000	MC512PA	246
1SNK146112R0000	MC512PA	248
1SNK146121R0000	MC512PA	246
1SNK146122R0000	MC512PA	248
1SNK146131R0000	MC512PA	246
1SNK146132R0000	MC512PA	248
1SNK146141R0000	MC512PA	246
1SNK146142R0000	MC512PA	248
1SNK146151R0000	MC512PA	246
1SNK146152R0000	MC512PA	248
1SNK146161R0000	MC512PA	246
1SNK146162R0000	MC512PA	248
1SNK146171R0000	MC512PA	246
1SNK146172R0000	MC512PA	248
1SNK146181R0000	MC512PA	246
1SNK146182R0000	MC512PA	248
1SNK146191R0000	MC512PA	246
1SNK146192R0000	MC512PA	248
1SNK146201R0000	MC512PA	246
1SNK146202R0000	MC512PA	248
1SNK146211R0000	MC512PA	246
1SNK146212R0000	MC512PA	248
1SNK146221R0000	MC512PA	246
1SNK146222R0000	MC512PA	248
1SNK146231R0000	MC512PA	246

Index

Part Number classification

Part Number	Type	Page
1SNK146232R0000	MC512PA	249
1SNK146241R0000	MC512PA	246
1SNK146242R0000	MC512PA	249
1SNK146251R0000	MC512PA	246
1SNK146252R0000	MC512PA	249
1SNK146261R0000	MC512PA	247
1SNK146262R0000	MC512PA	249
1SNK147001R0000	MC512PA	247
1SNK147002R0000	MC512PA	249
1SNK147011R0000	MC512PA	247
1SNK147012R0000	MC512PA	249
1SNK147021R0000	MC512PA	247
1SNK147022R0000	MC512PA	249
1SNK147031R0000	MC512PA	247
1SNK147032R0000	MC512PA	249
1SNK147041R0000	MC512PA	247
1SNK147042R0000	MC512PA	249
1SNK147051R0000	MC512PA	247
1SNK147052R0000	MC512PA	249
1SNK147061R0000	MC512PA	247
1SNK147062R0000	MC512PA	249
1SNK147071R0000	MC512PA	247
1SNK147072R0000	MC512PA	249
1SNK147081R0000	MC512PA	247
1SNK147082R0000	MC512PA	249
1SNK147091R0000	MC512PA	247
1SNK147092R0000	MC512PA	249
1SNK148001R0000	MC512PA	247
1SNK148002R0000	MC512PA	249
1SNK148011R0000	MC512PA	247
1SNK148012R0000	MC512PA	249
1SNK148021R0000	MC512PA	247
1SNK148022R0000	MC512PA	249
1SNK148031R0000	MC512PA	247
1SNK148032R0000	MC512PA	249
1SNK148041R0000	MC512PA	247
1SNK148042R0000	MC512PA	249
1SNK148051R0000	MC512PA	247
1SNK148052R0000	MC512PA	249
1SNK148061R0000	MC512PA	247
1SNK148062R0000	MC512PA	249
1SNK148071R0000	MC512PA	247
1SNK148072R0000	MC512PA	249
1SNK148091R0000	MC512PA	247
1SNK148092R0000	MC512PA	249
1SNK148101R0000	MC512PA	247
1SNK148102R0000	MC512PA	249
1SNK148111R0000	MC512PA	247
1SNK148112R0000	MC512PA	249
1SNK148121R0000	MC512PA	247
1SNK148122R0000	MC512PA	249
1SNK148131R0000	MC512PA	247
1SNK148132R0000	MC512PA	249
1SNK148141R0000	MC512PA	247
1SNK148142R0000	MC512PA	249
1SNK148151R0000	MC512PA	247
1SNK148152R0000	MC512PA	249
1SNK148161R0000	MC512PA	247
1SNK148162R0000	MC512PA	249
1SNK148171R0000	MC512PA	247
1SNK148172R0000	MC512PA	249
1SNK148181R0000	MC512PA	247
1SNK148182R0000	MC512PA	249
1SNK148192R0000	MC512PA	249
1SNK148202R0000	MC512PA	249
1SNK148212R0000	MC512PA	249
1SNK148222R0000	MC512PA	249
1SNK149001R0000	MC512PA	247
1SNK149002R0000	MC512PA	249
1SNK149011R0000	MC512PA	247
1SNK149012R0000	MC512PA	249
1SNK149999R0000	MC512PA	21
1SNK150000R0000	MC612	24
1SNK150004R0000	MC612-YL	250
1SNK150011R0000	MC612PA	252
1SNK150012R0000	MC612PA	254
1SNK150021R0000	MC612PA	252
1SNK150022R0000	MC612PA	254
1SNK150031R0000	MC612PA	252
1SNK150032R0000	MC612PA	254
1SNK150041R0000	MC612PA	252
1SNK150042R0000	MC612PA	254
1SNK150051R0000	MC612PA	252
1SNK150052R0000	MC612PA	254
1SNK150061R0000	MC612PA	252
1SNK150062R0000	MC612PA	254
1SNK150071R0000	MC612PA	252
1SNK150072R0000	MC612PA	254
1SNK150081R0000	MC612PA	252
1SNK150082R0000	MC612PA	254
1SNK150083R0000	MC612PA	252
1SNK150084R0000	MC612PA	254
1SNK150091R0000	MC612PA	252
1SNK150092R0000	MC612PA	254
1SNK150101R0000	MC612PA	252
1SNK150102R0000	MC612PA	254
1SNK150111R0000	MC612PA	252
1SNK150112R0000	MC612PA	254
1SNK150121R0000	MC612PA	252
1SNK150122R0000	MC612PA	254
1SNK150131R0000	MC612PA	252
1SNK150132R0000	MC612PA	254
1SNK150141R0000	MC612PA	252
1SNK150142R0000	MC612PA	254
1SNK150151R0000	MC612PA	252
1SNK150152R0000	MC612PA	254
1SNK150161R0000	MC612PA	252
1SNK150162R0000	MC612PA	254
1SNK150171R0000	MC612PA	252
1SNK150172R0000	MC612PA	254
1SNK150181R0000	MC612PA	252
1SNK150182R0000	MC612PA	254
1SNK150191R0000	MC612PA	252
1SNK150192R0000	MC612PA	254
1SNK150201R0000	MC612PA	252
1SNK150202R0000	MC612PA	254
1SNK155011R0000	MC612PA	252
1SNK155012R0000	MC612PA	254
1SNK155021R0000	MC612PA	252
1SNK155022R0000	MC612PA	254
1SNK155031R0000	MC612PA	252
1SNK155032R0000	MC612PA	254
1SNK155041R0000	MC612PA	252
1SNK155042R0000	MC612PA	254
1SNK155051R0000	MC612PA	252
1SNK155052R0000	MC612PA	254
1SNK155061R0000	MC612PA	252
1SNK155062R0000	MC612PA	254
1SNK155071R0000	MC612PA	252
1SNK155072R0000	MC612PA	254
1SNK155081R0000	MC612PA	252
1SNK155082R0000	MC612PA	254
1SNK155091R0000	MC612PA	252
1SNK155092R0000	MC612PA	254
1SNK155102R0000	MC612PA	254
1SNK156011R0000	MC612PA	252
1SNK156012R0000	MC612PA	254
1SNK156021R0000	MC612PA	252
1SNK156022R0000	MC612PA	254
1SNK156031R0000	MC612PA	252
1SNK156032R0000	MC612PA	254
1SNK156041R0000	MC612PA	252
1SNK156042R0000	MC612PA	254
1SNK156051R0000	MC612PA	252
1SNK156052R0000	MC612PA	254
1SNK156061R0000	MC612PA	252
1SNK156062R0000	MC612PA	254
1SNK156071R0000	MC612PA	252
1SNK156072R0000	MC612PA	254
1SNK156081R0000	MC612PA	252
1SNK156082R0000	MC612PA	254
1SNK156091R0000	MC612PA	252
1SNK156092R0000	MC612PA	254
1SNK156101R0000	MC612PA	252
1SNK156102R0000	MC612PA	254
1SNK156111R0000	MC612PA	252
1SNK156112R0000	MC612PA	254
1SNK156121R0000	MC612PA	252
1SNK156122R0000	MC612PA	254
1SNK156131R0000	MC612PA	252
1SNK156132R0000	MC612PA	254
1SNK156141R0000	MC612PA	252
1SNK156142R0000	MC612PA	254
1SNK156151R0000	MC612PA	252
1SNK156152R0000	MC612PA	254
1SNK156161R0000	MC612PA	252
1SNK156162R0000	MC612PA	254
1SNK156171R0000	MC612PA	252
1SNK156172R0000	MC612PA	254
1SNK156181R0000	MC612PA	252
1SNK156182R0000	MC612PA	254
1SNK156191R0000	MC612PA	252
1SNK156192R0000	MC612PA	254
1SNK156201R0000	MC612PA	252
1SNK156202R0000	MC612PA	254
1SNK156211R0000	MC612PA	252
1SNK156212R0000	MC612PA	254
1SNK156221R0000	MC612PA	252
1SNK156222R0000	MC612PA	254
1SNK156231R0000	MC612PA	252
1SNK156232R0000	MC612PA	254
1SNK156241R0000	MC612PA	253
1SNK156242R0000	MC612PA	254
1SNK156251R0000	MC612PA	253
1SNK156252R0000	MC612PA	255
1SNK156261R0000	MC612PA	253
1SNK156262R0000	MC612PA	255
1SNK157001R0000	MC612PA	253
1SNK157002R0000	MC612PA	255
1SNK157011R0000	MC612PA	253
1SNK157012R0000	MC612PA	255
1SNK157021R0000	MC612PA	253
1SNK157022R0000	MC612PA	255
1SNK157031R0000	MC612PA	253
1SNK157032R0000	MC612PA	255
1SNK157041R0000	MC612PA	253
1SNK157042R0000	MC612PA	255
1SNK157051R0000	MC612PA	253
1SNK157052R0000	MC612PA	255
1SNK157061R0000	MC612PA	253
1SNK157062R0000	MC612PA	255
1SNK157071R0000	MC612PA	253
1SNK157072R0000	MC612PA	255
1SNK157081R0000	MC612PA	253
1SNK157082R0000	MC612PA	255
1SNK157091R0000	MC612PA	253
1SNK157092R0000	MC612PA	255
1SNK158001R0000	MC612PA	253
1SNK158002R0000	MC612PA	255
1SNK158011R0000	MC612PA	253
1SNK158012R0000	MC612PA	255
1SNK158021R0000	MC612PA	253
1SNK158022R0000	MC612PA	255
1SNK158031R0000	MC612PA	253
1SNK158032R0000	MC612PA	255
1SNK158041R0000	MC612PA	253
1SNK158042R0000	MC612PA	255
1SNK158051R0000	MC612PA	253
1SNK158052R0000	MC612PA	255
1SNK158061R0000	MC612PA	253
1SNK158062R0000	MC612PA	255
1SNK158071R0000	MC612PA	253
1SNK158072R0000	MC612PA	255
1SNK158091R0000	MC612PA	253
1SNK158092R0000	MC612PA	255
1SNK158101R0000	MC612PA	253
1SNK158102R0000	MC612PA	255
1SNK158111R0000	MC612PA	253
1SNK158112R0000	MC612PA	255
1SNK158121R0000	MC612PA	253
1SNK158122R0000	MC612PA	255
1SNK158131R0000	MC612PA	253
1SNK158132R0000	MC612PA	255
1SNK158141R0000	MC612PA	253
1SNK158142R0000	MC612PA	255
1SNK158151R0000	MC612PA	253
1SNK158152R0000	MC612PA	255
1SNK158161R0000	MC612PA	253
1SNK158162R0000	MC612PA	255
1SNK158171R0000	MC612PA	253
1SNK158172R0000	MC612PA	255
1SNK158181R0000	MC612PA	253
1SNK158182R0000	MC612PA	255
1SNK158192R0000	MC612PA	255
1SNK158202R0000	MC612PA	255
1SNK158212R0000	MC612PA	255
1SNK158222R0000	MC612PA	255
1SNK159001R0000	MC612PA	253
1SNK159002R0000	MC612PA	255
1SNK159011R0000	MC612PA	253
1SNK159012R0000	MC612PA	255
1SNK159999R0000	MC612PA	24
1SNK160000R0000	MC812	30
1SNK160004R0000	MC812-YL	256
1SNK160011R0000	MC812PA	257
1SNK160012R0000	MC812PA	259
1SNK160021R0000	MC812PA	257
1SNK160022R0000	MC812PA	259
1SNK160031R0000	MC812PA	257
1SNK160032R0000	MC812PA	259
1SNK160041R0000	MC812PA	257
1SNK160042R0000	MC812PA	259
1SNK160051R0000	MC812PA	257
1SNK160052R0000	MC812PA	259
1SNK160061R0000	MC812PA	257
1SNK160062R0000	MC812PA	259
1SNK160071R0000	MC812PA	257

Index
Part Number classification

Part Number	Type	Page
1SNK160072R0000	MC812PA	259
1SNK160081R0000	MC812PA	257
1SNK160082R0000	MC812PA	259
1SNK160083R0000	MC812PA	257
1SNK160084R0000	MC812PA	259
1SNK160091R0000	MC812PA	257
1SNK160092R0000	MC812PA	259
1SNK160101R0000	MC812PA	257
1SNK160102R0000	MC812PA	259
1SNK160111R0000	MC812PA	257
1SNK160112R0000	MC812PA	259
1SNK160121R0000	MC812PA	257
1SNK160122R0000	MC812PA	259
1SNK160131R0000	MC812PA	257
1SNK160132R0000	MC812PA	259
1SNK160141R0000	MC812PA	257
1SNK160142R0000	MC812PA	259
1SNK160151R0000	MC812PA	257
1SNK160152R0000	MC812PA	259
1SNK160161R0000	MC812PA	257
1SNK160162R0000	MC812PA	259
1SNK160171R0000	MC812PA	257
1SNK160172R0000	MC812PA	259
1SNK160181R0000	MC812PA	257
1SNK160182R0000	MC812PA	259
1SNK160191R0000	MC812PA	257
1SNK160192R0000	MC812PA	259
1SNK160201R0000	MC812PA	257
1SNK160202R0000	MC812PA	259
1SNK165011R0000	MC812PA	257
1SNK165012R0000	MC812PA	259
1SNK165021R0000	MC812PA	257
1SNK165022R0000	MC812PA	259
1SNK165031R0000	MC812PA	257
1SNK165032R0000	MC812PA	259
1SNK165041R0000	MC812PA	257
1SNK165042R0000	MC812PA	259
1SNK165051R0000	MC812PA	257
1SNK165052R0000	MC812PA	259
1SNK165061R0000	MC812PA	257
1SNK165062R0000	MC812PA	259
1SNK165071R0000	MC812PA	257
1SNK165072R0000	MC812PA	259
1SNK165081R0000	MC812PA	257
1SNK165082R0000	MC812PA	259
1SNK165091R0000	MC812PA	257
1SNK165092R0000	MC812PA	259
1SNK165102R0000	MC812PA	259
1SNK166011R0000	MC812PA	257
1SNK166012R0000	MC812PA	259
1SNK166021R0000	MC812PA	257
1SNK166022R0000	MC812PA	259
1SNK166031R0000	MC812PA	257
1SNK166032R0000	MC812PA	259
1SNK166041R0000	MC812PA	257
1SNK166042R0000	MC812PA	259
1SNK166051R0000	MC812PA	257
1SNK166052R0000	MC812PA	259
1SNK166061R0000	MC812PA	257
1SNK166062R0000	MC812PA	259
1SNK166071R0000	MC812PA	257
1SNK166072R0000	MC812PA	259
1SNK166081R0000	MC812PA	257
1SNK166082R0000	MC812PA	259
1SNK166091R0000	MC812PA	257
1SNK166092R0000	MC812PA	259
1SNK166101R0000	MC812PA	257
1SNK166102R0000	MC812PA	259
1SNK166111R0000	MC812PA	257
1SNK166112R0000	MC812PA	259
1SNK166121R0000	MC812PA	257
1SNK166122R0000	MC812PA	259
1SNK166131R0000	MC812PA	257
1SNK166132R0000	MC812PA	259
1SNK166141R0000	MC812PA	257
1SNK166142R0000	MC812PA	259
1SNK166151R0000	MC812PA	257
1SNK166152R0000	MC812PA	259
1SNK166161R0000	MC812PA	257
1SNK166162R0000	MC812PA	259
1SNK166171R0000	MC812PA	257
1SNK166172R0000	MC812PA	259
1SNK166181R0000	MC812PA	257
1SNK166182R0000	MC812PA	259
1SNK166191R0000	MC812PA	257
1SNK166192R0000	MC812PA	259
1SNK166201R0000	MC812PA	257
1SNK166202R0000	MC812PA	259
1SNK166211R0000	MC812PA	257
1SNK166212R0000	MC812PA	259
1SNK166221R0000	MC812PA	257
1SNK166222R0000	MC812PA	259
1SNK166231R0000	MC812PA	258
1SNK166232R0000	MC812PA	260
1SNK166241R0000	MC812PA	258
1SNK166242R0000	MC812PA	260
1SNK166251R0000	MC812PA	258
1SNK166252R0000	MC812PA	260
1SNK166261R0000	MC812PA	258
1SNK166262R0000	MC812PA	260
1SNK167001R0000	MC812PA	258
1SNK167002R0000	MC812PA	260
1SNK167011R0000	MC812PA	258
1SNK167012R0000	MC812PA	260
1SNK167021R0000	MC812PA	258
1SNK167022R0000	MC812PA	260
1SNK167031R0000	MC812PA	258
1SNK167032R0000	MC812PA	260
1SNK167041R0000	MC812PA	258
1SNK167042R0000	MC812PA	260
1SNK167051R0000	MC812PA	258
1SNK167052R0000	MC812PA	260
1SNK167061R0000	MC812PA	258
1SNK167062R0000	MC812PA	260
1SNK167071R0000	MC812PA	258
1SNK167072R0000	MC812PA	260
1SNK167081R0000	MC812PA	258
1SNK167082R0000	MC812PA	260
1SNK167091R0000	MC812PA	258
1SNK167092R0000	MC812PA	260
1SNK168001R0000	MC812PA	258
1SNK168002R0000	MC812PA	260
1SNK168011R0000	MC812PA	258
1SNK168012R0000	MC812PA	260
1SNK168021R0000	MC812PA	258
1SNK168022R0000	MC812PA	260
1SNK168031R0000	MC812PA	258
1SNK168032R0000	MC812PA	260
1SNK168041R0000	MC812PA	258
1SNK168042R0000	MC812PA	260
1SNK168051R0000	MC812PA	258
1SNK168052R0000	MC812PA	260
1SNK168061R0000	MC812PA	258
1SNK168062R0000	MC812PA	260
1SNK168071R0000	MC812PA	258
1SNK168072R0000	MC812PA	260
1SNK168091R0000	MC812PA	258
1SNK168092R0000	MC812PA	260
1SNK168101R0000	MC812PA	258
1SNK168102R0000	MC812PA	260
1SNK168111R0000	MC812PA	258
1SNK168112R0000	MC812PA	260
1SNK168121R0000	MC812PA	258
1SNK168122R0000	MC812PA	260
1SNK168131R0000	MC812PA	258
1SNK168132R0000	MC812PA	260
1SNK168141R0000	MC812PA	258
1SNK168142R0000	MC812PA	260
1SNK168151R0000	MC812PA	258
1SNK168152R0000	MC812PA	260
1SNK168161R0000	MC812PA	258
1SNK168162R0000	MC812PA	260
1SNK168171R0000	MC812PA	258
1SNK168172R0000	MC812PA	260
1SNK168181R0000	MC812PA	258
1SNK168182R0000	MC812PA	260
1SNK168192R0000	MC812PA	260
1SNK168202R0000	MC812PA	260
1SNK168212R0000	MC812PA	260
1SNK168222R0000	MC812PA	260
1SNK169001R0000	MC812PA	258
1SNK169002R0000	MC812PA	260
1SNK169011R0000	MC812PA	258
1SNK169012R0000	MC812PA	260
1SNK169999R0000	MC812PA	30
1SNK505010R0000	ZS4	80
1SNK505020R0000	ZS4-BL	80
1SNK505030R0000	ZS4-OR	80
1SNK505060R0000	ZS4-YL	80
1SNK505061R0000	ZS4-GN	80
1SNK505062R0000	ZS4-RD	80
1SNK505063R0000	ZS4-PR	80
1SNK505064R0000	ZS4-BR	80
1SNK505065R0000	ZS4-WH	80
1SNK505066R0000	ZS4-BK	80
1SNK505150R0000	ZS4-PE	80
1SNK505210R0000	ZS4-D2	136
1SNK505211R0000	ZS4-D1	137
1SNK505212R0000	ZS4-T3	146
1SNK505214R0000	ZS4-D-CH-UD	148
1SNK505215R0000	ZS4-D-CH-DU	149
1SNK505220R0000	ZS4-D2-BL	136
1SNK505230R0000	ZS4-D2-OR	136
1SNK505310R0000	ZS4-S	105
1SNK505311R0000	ZS4-S-T2	106
1SNK505312R0000	ZS4-S-T2.3	106
1SNK505313R0000	ZS4-SP	112
1SNK505314R0000	ZS4-SP-T2	113
1SNK505315R0000	ZS4-D2-S	142
1SNK505316R0000	ZS4-D2-S-T2	143
1SNK505320R0000	ZS4-S-BL	105
1SNK505321R0000	ZS4-S-T2-BL	106
1SNK505330R0000	ZS4-S-OR	105
1SNK505331R0000	ZS4-S-T2-OR	106
1SNK505910R0000	ES4	80
1SNK505911R0000	ES6-4S	83
1SNK505912R0000	ES6-3S	82
1SNK505960R0000	ES4-D2	136
1SNK505961R0000	ES4-T3	146
1SNK506010R0000	ZS6	81
1SNK506011R0000	ZS6-3S	82
1SNK506012R0000	ZS6-4S	83
1SNK506013R0000	ZS4-R2	130
1SNK506020R0000	ZS6-BL	81
1SNK506021R0000	ZS6-3S-BL	82
1SNK506022R0000	ZS6-4S-BL	83
1SNK506030R0000	ZS6-OR	81
1SNK506060R0000	ZS6-YL	81
1SNK506061R0000	ZS6-GN	81
1SNK506062R0000	ZS6-RD	81
1SNK506063R0000	ZS6-PR	81
1SNK506064R0000	ZS6-BR	81
1SNK506065R0000	ZS6-WH	81
1SNK506066R0000	ZS6-BK	81
1SNK506067R0000	ZS6-3S-YL	82
1SNK506068R0000	ZS6-4S-YL	83
1SNK506150R0000	ZS6-PE	81
1SNK506151R0000	ZS6-3S-PE	82
1SNK506152R0000	ZS6-4S-PE	83
1SNK506153R0000	ZS4-PE-R2	131
1SNK506210R0000	ZS6-D2	138
1SNK506211R0000	ZS6-D1	139
1SNK506212R0000	ZS6-D2-PE	140
1SNK506213R0000	ZS4-T3-R1	147
1SNK506214R0000	ZS6-D1-RD	139
1SNK506220R0000	ZS6-D2-BL	138
1SNK506230R0000	ZS6-D2-OR	138
1SNK506250R0000	ZS6-D1-PE	138
1SNK506260R0000	ZS6-D2-YL	138
1SNK506262R0000	ZS6-D2-RD	138
1SNK506265R0000	ZS6-D2-WH	138
1SNK506266R0000	ZS6-D2-BK	138
1SNK506310R0000	ZS4-S-R1	107
1SNK506311R0000	ZS4-S-T2-R1	108
1SNK506312R0000	ZS4-S-T2.3-R1	108
1SNK506313R0000	ZS4-SP-R1	114
1SNK506314R0000	ZS4-SP-T2-R1	115
1SNK506315R0000	ZS6-S	109
1SNK506316R0000	ZS6-S-4S-T2	110
1SNK506320R0000	ZS4-S-R1-BL	107
1SNK506321R0000	ZS4-S-T2-R1-BL	108
1SNK506322R0000	ZS6-S-BL	109
1SNK506330R0000	ZS4-S-R1-OR	107
1SNK506331R0000	ZS4-S-T2-R1-OR	108
1SNK506410R0000	ZS4-SF	126
1SNK506411R0000	ZS4-SF-T2	127
1SNK506412R0000	ZS4-SF-R1	128
1SNK506413R0000	ZS4-SF-R2	129
1SNK506414R0000	ZS4-S-R2	132
1SNK506415R0000	ZS4-SF-R3	128
1SNK506416R0000	ZS4-SF-R4	129
1SNK508010R0000	ZS10	84
1SNK508011R0000	ZS10-R1	152
1SNK508013R0000	ZS4-R1	124
1SNK508020R0000	ZS10-BL	84
1SNK508030R0000	ZS10-OR	84
1SNK508060R0000	ZS10-YL	84
1SNK508061R0000	ZS10-GN	84
1SNK508062R0000	ZS10-RD	84
1SNK508063R0000	ZS10-PR	84
1SNK508064R0000	ZS10-BR	84
1SNK508065R0000	ZS10-WH	84
1SNK508066R0000	ZS10-BK	84
1SNK508150R0000	ZS10-PE	84
1SNK508151R0000	ZS10-PE-R1	153
1SNK508310R0000	ZS10-ST	154
1SNK508311R0000	ZS10-ST-T4	152

Index

Part Number classification

Part Number	Type	Page
1SNK508312R0000	ZS10-ST-1	152
1SNK508315R0000	ZS10-S	111
1SNK508316R0000	ZS10-SP	116
1SNK508320R0000	ZS10-S-BL	111
1SNK508410R0000	ZS4-SF1	120
1SNK508411R0000	ZS4-SF1-T2	121
1SNK508412R0000	ZS4-SF1-R1	122
1SNK508413R0000	ZS4-SF1-R2	123
1SNK508414R0000	ZS4-SF1-R3	122
1SNK508415R0000	ZS4-SF1-R4	123
1SNK508416R0000	ZS4-S-R3	125
1SNK508417R0000	ZS10-S-R2	135
1SNK508418R0000	ZS10-SF	133
1SNK508419R0000	ZS4-S-R3-T2	125
1SNK508421R0000	ZS10-SF-R1	134
1SNK508422R0000	ZS10-SF-R3	134
1SNK508423R0000	ZS4-D2-SF1-R1	145
1SNK508424R0000	ZS4-D2-SF1-R3	145
1SNK508425R0000	ZS4-D2-SF1	144
1SNK508430R0000	ZS4-SF1-OR	120
1SNK508910R0000	ES10-ST	152
1SNK508911R0000	ES4-D2-SF1	144
1SNK508960R0000	ES4-SF	120
1SNK510010R0000	ZS16	85
1SNK510020R0000	ZS16-BL	85
1SNK510030R0000	ZS16-OR	85
1SNK510150R0000	ZS16-PE	85
1SNK512010R0000	ZS25	86
1SNK512020R0000	ZS25-BL	86
1SNK512060R0000	ZS25-YL	86
1SNK512150R0000	ZS25-PE	86
1SNK516010R0000	ZS35	87
1SNK516011R0000	ZS50	88
1SNK516020R0000	ZS35-BL	87
1SNK516021R0000	ZS50-BL	88
1SNK516030R0000	ZS35-OR	87
1SNK516060R0000	ZS50-YL	88
1SNK516063R0000	ZS50-RD	88
1SNK516064R0000	ZS50-BK	88
1SNK516150R0000	ZS35-PE	87
1SNK516151R0000	ZS50-PE	88
1SNK516170R0000	ZS35-PEN	101
1SNK522010R0000	ZS70	89
1SNK522020R0000	ZS70-BL	89
1SNK522060R0000	ZS70-YL	89
1SNK522150R0000	ZS70-PE	89
1SNK526010R0000	ZS95	90
1SNK526020R0000	ZS95-BL	90
1SNK526060R0000	ZS95-YL	90
1SNK526150R0000	ZS95-PE	90
1SNK531010R0000	ZS150	91
1SNK531020R0000	ZS150-BL	91
1SNK531060R0000	ZS150-YL	91
1SNK536010R0000	ZS240	92
1SNK536020R0000	ZS240-BL	92
1SNK536060R0000	ZS240-YL	92
1SNK705010R0000	ZK2.5	21
1SNK705011R0000	ZK2.5-3P	22
1SNK705012R0000	ZK2.5-4P	23
1SNK705020R0000	ZK2.5-BL	21
1SNK705021R0000	ZK2.5-3P-BL	22
1SNK705022R0000	ZK2.5-4P-BL	23
1SNK705030R0000	ZK2.5-OR	21
1SNK705031R0000	ZK2.5-3P-OR	22
1SNK705032R0000	ZK2.5-4P-OR	23
1SNK705060R0000	ZK2.5-YL	21
1SNK705061R0000	ZK2.5-GN	21
1SNK705062R0000	ZK2.5-RD	21
1SNK705065R0000	ZK2.5-WH	21
1SNK705066R0000	ZK2.5-BK	21
1SNK705067R0000	ZK2.5-3P-YL	22
1SNK705068R0000	ZK2.5-3P-GN	22
1SNK705069R0000	ZK2.5-3P-RD	22
1SNK705072R0000	ZK2.5-3P-WH	22
1SNK705073R0000	ZK2.5-3P-BK	22
1SNK705074R0000	ZK2.5-4P-YL	23
1SNK705075R0000	ZK2.5-4P-GN	23
1SNK705076R0000	ZK2.5-4P-RD	23
1SNK705079R0000	ZK2.5-4P-WH	23
1SNK705080R0000	ZK2.5-4P-BK	23
1SNK705150R0000	ZK2.5-PE	21
1SNK705151R0000	ZK2.5-PE-3P	22
1SNK705152R0000	ZK2.5-PE-4P	23
1SNK705210R0000	ZK2.5-D2	56
1SNK705211R0000	ZK2.5-D1	57
1SNK705212R0000	ZK2.5-D2-PE	58
1SNK705213R0000	ZK2.5-D-CH-UD	67
1SNK705214R0000	ZK2.5-D-CH-DU	68
1SNK705219R0000	ZK2.5-D-CH2-DU-RL	69
1SNK705220R0000	ZK2.5-D2-BL	56
1SNK705250R0000	ZK2.5-D1-PE	56
1SNK705310R0000	ZK2.5-S	49
1SNK705311R0000	ZK2.5-SP	52
1SNK705312R0000	ZK2.5-S-4P	50
1SNK705313R0000	ZK2.5-SP-4P	53
1SNK705320R0000	ZK2.5-S-BL	49
1SNK705321R0000	ZK2.5-S-4P-BL	50
1SNK705330R0000	ZK2.5-S-OR	49
1SNK705331R0000	ZK2.5-S-4P-OR	50
1SNK705510R0000	ZK2.5-T3	60
1SNK705511R0000	ZK2.5-T1	61
1SNK705512R0000	ZK2.5-L-L-PE	62
1SNK705513R0000	ZK2.5-L-N-PE	63
1SNK705550R0000	ZK2.5-T1-PE	60
1SNK705710R0000	ZK2.5-CH-4P-LR	65
1SNK705711R0000	ZK2.5-CH-4P-RL	66
1SNK705910R0000	EK2.5	21
1SNK705911R0000	EK2.5-3P	22
1SNK705912R0000	EK2.5-4P	23
1SNK705913R0000	EK2.5-S-4P	50
1SNK705960R0000	EK2.5-D2	56
1SNK705961R0000	EK2.5-T3	60
1SNK706010R0000	ZK4	24
1SNK706011R0000	ZK4-3P	25
1SNK706012R0000	ZK4-4P	26
1SNK706020R0000	ZK4-BL	24
1SNK706021R0000	ZK4-3P-BL	25
1SNK706022R0000	ZK4-4P-BL	26
1SNK706030R0000	ZK4-OR	24
1SNK706031R0000	ZK4-3P-OR	25
1SNK706032R0000	ZK4-4P-OR	26
1SNK706060R0000	ZK4-YL	24
1SNK706062R0000	ZK4-RD	24
1SNK706066R0000	ZK4-BK	24
1SNK706150R0000	ZK4-PE	24
1SNK706151R0000	ZK4-PE-3P	25
1SNK706152R0000	ZK4-PE-4P	26
1SNK706310R0000	ZK2.5-S-R1	51
1SNK706410R0000	ZK2.5-SF	51
1SNK706411R0000	ZK2.5-SF-R1	55
1SNK706412R0000	ZK2.5-SF-R3	55
1SNK708010R0000	ZK6	27
1SNK708011R0000	ZK6-3P	28
1SNK708020R0000	ZK6-BL	27
1SNK708021R0000	ZK6-3P-BL	28
1SNK708030R0000	ZK6-OR	27
1SNK708031R0000	ZK6-3P-OR	28
1SNK708060R0000	ZK6-YL	27
1SNK708062R0000	ZK6-RD	27
1SNK708066R0000	ZK6-BK	27
1SNK708150R0000	ZK6-PE	27
1SNK708151R0000	ZK6-PE-3P	28
1SNK708911R0000	EK6-3P	28
1SNK710010R0000	ZK10	29
1SNK710011R0000	ZK10-3P	31
1SNK710020R0000	ZK10-BL	29
1SNK710021R0000	ZK10-3P-BL	31
1SNK710030R0000	ZK10-OR	29
1SNK710063R0000	ZK10-PV	30
1SNK710064R0000	ZK10-3P-PV	32
1SNK710065R0000	ZK10-PV-BL	30
1SNK710067R0000	ZK10-3P-PV-BL	32
1SNK710150R0000	ZK10-PE	30
1SNK710151R0000	ZK10-PE-3P	32
1SNK710910R0000	EK10	29
1SNK710911R0000	EK10-3P	31
1SNK712010R0000	ZK16	33
1SNK712011R0000	ZK16-3P	35
1SNK712020R0000	ZK16-BL	33
1SNK712021R0000	ZK16-3P-BL	35
1SNK712063R0000	ZK16-PV	34
1SNK712064R0000	ZK16-3P-PV	36
1SNK712065R0000	ZK16-PV-BL	34
1SNK712067R0000	ZK16-3P-PV-BL	36
1SNK712150R0000	ZK16-PE	34
1SNK712151R0000	ZK16-PE-3P	36
1SNK805010R0000	ZDK2.5-22	177
1SNK805013R0000	ZDS4-22	190
1SNK805014R0000	ZDK2.5-21	176
1SNK805015R0000	ZDK2.5-11	175
1SNK805016R0000	ZD2.5-11	172
1SNK805017R0000	ZD2.5-22	173
1SNK805020R0000	ZDK2.5-22-BL	177
1SNK805025R0000	ZDK2.5-11-BL	175
1SNK805150R0000	ZDK2.5-11-PE	179
1SNK805152R0000	ZDK2.5-22-PE	180
1SNK805156R0000	ZD2.5-22-PE	174
1SNK805212R0000	ZDK2.5-D2-PE	183
1SNK805213R0000	ZDK2.5-D2	181
1SNK805214R0000	ZDK2.5-D1	182
1SNK805223R0000	ZDK2.5-D2-BL	181
1SNK805250R0000	ZDK2.5-D1-PE	184
1SNK805712R0000	CDK2.5	172
1SNK805713R0000	CDK2.5-E	172
1SNK805714R0000	CDS4	190
1SNK805715R0000	CDS4-E	190
1SNK805738R0000	CDK2.5-J	186
1SNK805739R0000	CDK2.5-J-E	186
1SNK805740R0000	CDK2.5-2P-J	187
1SNK805741R0000	CDK2.5-2P-J-E	187
1SNK805742R0000	CDK2.5-BL	175
1SNK805743R0000	CDK2.5-BL-E	175
1SNK805744R0000	CDK2.5-J-BL	186
1SNK805745R0000	CDK2.5-J-BL-E	186
1SNK805746R0000	CDK2.5-2P-J-BL	187
1SNK805747R0000	CDK2.5-2P-J-BL-E	187
1SNK805748R0000	CDK2.5-J-PE	186
1SNK805749R0000	CDK2.5-J-PE-E	186
1SNK805750R0000	CDK2.5-PE	174
1SNK805751R0000	CDK2.5-2P-J-PE	187
1SNK805752R0000	CDK2.5-2P-J-PE-E	187
1SNK805753R0000	CDK2.5-PE-E	174
1SNK805910R0000	EDK2.5-22	177
1SNK805911R0000	EDS4-22	190
1SNK805913R0000	EDK2.5-D	181
1SNK805914R0000	EDK2.5-21	176
1SNK805915R0000	EDK2.5-11	172
1SNK805917R0000	ED2.5-22	173
1SNK806010R0000	ZDK4-22	178
1SNK806013R0000	ZDS4-22-R1	192
1SNK806712R0000	CDK4	178
1SNK806713R0000	CDK4-E	178
1SNK806714R0000	CDS4-R1	192
1SNK900001R0000	BAM4	80
1SNK900002R0000	BAZ1	30
1SNK900101R0000	CS	80
1SNK900102R0000	BAZH1	56
1SNK900103R0000	CS-R1	80
1SNK900104R0000	ES-TC8	27
1SNK900105R0000	ES-TC6	24
1SNK900106R0000	CS-R2	21
1SNK900107R0000	CS-R3	30
1SNK900200R0000	TC5	21
1SNK900201R0000	TC5-R1	21
1SNK900203R0000	TP2	30
1SNK900205R0000	TP4	30
1SNK900401R0000	PG5	52
1SNK900402R0000	PG5-R1	52
1SNK900403R0000	PG5-R2	211
1SNK900600R0000	SHBS	80
1SNK900601R0000	SHBP	21
1SNK900602R0000	SHB	56
1SNK900603R0000	JB85-3	21
1SNK900604R0000	CO	155
1SNK900605R0000	LH	199
1SNK900606R0000	LH-J	56
1SNK900607R0000	LH-R1	199
1SNK900611R0000	UMH	30
1SNK900618R0000	PL5	80
1SNK900619R0000	PL6	81
1SNK900620R0000	PL8	84
1SNK900621R0000	PL10	85
1SNK900622R0000	PL16	87
1SNK900624R0000	KCO	155
1SNK900625R0000	PT-3	210
1SNK900627R0000	RILS	219
1SNK900630R0000	MCLH	201
1SNK900631R0000	MCLH-R1	201
1SNK900633R0000	MCLH-YL	201
1SNK900634R0000	MCLH-R1-YL	201
1SNK900636R0000	COP-ZD	172
1SNK900637R0000	VR-ZD	185
1SNK900640R0000	TO3.5-50	213
1SNK900641R0000	TO4-100	213
1SNK900642R0000	TO5.5-125	213
1SNK900643R0000	TO6.5-150	213
1SNK900644R0000	TO3.5-100-INS	213
1SNK900650R0000	PS-3	213
1SNK900652R0000	SC-JB8-2	152
1SNK900653R0000	SC-JB8-3	156
1SNK900654R0000	SC-JB8-4	156
1SNK900655R0000	SC-JB8-5	231
1SNK900657R0000	SC-JB8-3-OR	231
1SNK900658R0000	SC-JB8-4-OR	231
1SNK900659R0000	TO3.5-50-A	213
1SNK900660R0000	PT-ZD	185
1SNK905302R0000	JB5-2	21

Index
Part Number classification

Part Number	Type	Page
1SNK905303R0000	JB5-3	21
1SNK905304R0000	JB5-4	21
1SNK905305R0000	JB5-5	21
1SNK905310R0000	JB5-10	21
1SNK905350R0000	JB5-50	21
1SNK906302R0000	JB6-2	24
1SNK906303R0000	JB6-3	24
1SNK906304R0000	JB6-4	24
1SNK906305R0000	JB6-5	24
1SNK906310R0000	JB6-10	24
1SNK906350R0000	JB6-50	24
1SNK908302R0000	JB8-2	27
1SNK908303R0000	JB8-3	27
1SNK908304R0000	JB8-4	27
1SNK908305R0000	JB8-5	27
1SNK908310R0000	JB8-10	27
1SNK908902R0000	JB8-2-R1	154
1SNK908903R0000	JB8-3-R1	154
1SNK908904R0000	JB8-4-R1	154
1SNK908905R0000	JB8-5-R1	154
1SNK908910R0000	JB8-10-R1	154
1SNK910302R0000	JB10-2	29
1SNK910303R0000	JB10-3	29
1SNK910304R0000	JB10-4	29
1SNK910305R0000	JB10-5	29
1SNK910310R0000	JB10-10	29
1SNK912302R0000	JB12-2	30
1SNK912303R0000	JB12-3	30
1SNK912305R0000	JB12-5	30
1SNK916302R0000	JB16-2	87
1SNK916303R0000	JB16-3	87
1SNK916304R0000	JB16-4	87
1SNK916305R0000	JB16-5	87
1SNK916310R0000	JB16-10	87
1SNK922302R0000	JB22-2	89
1SNK922303R0000	JB22-3	89
1SNK922305R0000	JB22-5	89
1SNK922310R0000	JB22-10	89
1SNK926302R0000	JB26-2	90
1SNK926303R0000	JB26-3	90
1SNK926305R0000	JB26-5	90
1SNK926310R0000	JB26-10	90

Part Number	Type	Page

Part Number	Type	Page

Index
Type classification

Type	Part Number	Page
AJS9	1SNA179726R0200	152
AJS9-BK	1SNA206680R1500	154
AJS9-BL	1SNA206683R0400	154
AJS9-BR	1SNA206782R0000	154
AJS9-GN	1SNA206681R0200	154
AJS9-GR	1SNA206682R0300	154
AJS9-PR	1SNA206772R0000	154
AJS9-RD	1SNA206720R1400	154
AJS9-WH	1SNA206765R0000	154
AL4-M3	1SNA206721R0100	152
AMS 250 BASIC KIT	1SNA360000R2500	267
AMS 600 KIT	1SNA360000R2400	245
AMS CLEANER FLUID	1SNA360155R1700	268
AMS CLEANER KIT	1SNA360156R1000	268
AMS INK CARTRIDGES	1SNA360150R2600	268
AMS PEN 0.18	1SNA360103R1400	268
AMS PEN 0.25	1SNA360100R2500	268
AMS PEN 0.35	1SNA360101R1200	268
AMS PEN 0.50	1SNA360104R1500	268
AMS PEN 0.70	1SNA360105R1600	268
AMS PEN 1.00	1SNA360106R1700	268
ANT	1SNA168675R1400	120
BAM4	1SNK900001R0000	80
BAZ1	1SNK900002R0000	30
BAZH1	1SNK900102R0000	56
BJMI31.2	1SNA206053R0700	91
BJMI31.3	1SNA206054R0000	91
BJMI36.2	1SNA206126R2500	92
BJMI36.3	1SNA206223R0600	92
CDK2.5	1SNK805712R0000	172
CDK2.5-2P-J	1SNK805740R0000	187
CDK2.5-2P-J-BL	1SNK805746R0000	187
CDK2.5-2P-J-BL-E	1SNK805747R0000	187
CDK2.5-2P-J-E	1SNK805741R0000	187
CDK2.5-2P-J-PE	1SNK805751R0000	187
CDK2.5-2P-J-PE-E	1SNK805752R0000	187
CDK2.5-BL	1SNK805742R0000	175
CDK2.5-BL-E	1SNK805743R0000	175
CDK2.5-E	1SNK805713R0000	172
CDK2.5-J	1SNK805738R0000	186
CDK2.5-J-BL	1SNK805744R0000	186
CDK2.5-J-BL-E	1SNK805745R0000	186
CDK2.5-J-E	1SNK805739R0000	186
CDK2.5-J-PE	1SNK805748R0000	186
CDK2.5-J-PE-E	1SNK805749R0000	186
CDK2.5-PE	1SNK805750R0000	174
CDK2.5-PE-E	1SNK805753R0000	174
CDK4	1SNK806712R0000	178
CDK4-E	1SNK806713R0000	178
CDS4	1SNK805714R0000	190
CDS4-E	1SNK805715R0000	190
CDS4-R1	1SNK806714R0000	192
CN5	1SNA179371R1600	120
CO	1SNK900604R0000	155
COP-ZD	1SNK900636R0000	172
CPBP1	1SNA399788R1600	91
CPBP2	1SNA399787R0500	92
CS	1SNK900101R0000	80
CS-R1	1SNK900103R0000	80
CS-R2	1SNK900106R0000	21
CS-R3	1SNK900107R0000	30
DISPOSABLE AMS PEN 0.25	1SNAt360120R1000	268
DISPOSABLE AMS PEN 0.35	1SNA360121R0500	268
DISPOSABLE AMS PEN ED-R 0.18	1SNA360124R1000	268
DISPOSABLE AMS PEN ED-R 0.25	1SNA360122R1000	268
DISPOSABLE AMS PEN ED-R 0.35	1SNA360123R0500	268
DUST COVER	1SNA360161R1500	265
ED2.5-22	1SNK805917R0000	173
EDK2.5-11	1SNK805915R0000	172
EDK2.5-21	1SNK805914R0000	176
EDK2.5-22	1SNK805910R0000	177
EDK2.5-D	1SNK805913R0000	181
EDS4-22	1SNK805911R0000	190
EK10	1SNK710910R0000	29
EK10-3P	1SNK710911R0000	31
EK2.5	1SNK705910R0000	21
EK2.5-3P	1SNK705911R0000	22
EK2.5-4P	1SNK705912R0000	23
EK2.5-D2	1SNK705960R0000	56
EK2.5-S-4P	1SNK705913R0000	50
EK2.5-T3	1SNK705961R0000	60
EK6-3P	1SNK708911R0000	28
EPR1	1SNA178431R2200	201
EPR2	1SNA399726R0700	201
ES10-ST	1SNK508910R0000	152
ES4	1SNK505910R0000	80
ES4-D2	1SNK505960R0000	136
ES4-D2-SF1	1SNK508911R0000	144
ES4-SF	1SNK508960R0000	120
ES4-T3	1SNK505961R0000	146
ES6-3S	1SNK505912R0000	82
ES6-4S	1SNK505911R0000	83
ES-TC6	1SNK900105R0000	24
ES-TC8	1SNK900104R0000	27
HTP500-BAS	1SNA235706R0700	265
HTP500-CLEAN	1SNA235714R2600	265
HTP500-FEED	1SNA235703R0400	265
HTP500-PL	1SNA235704R0500	265
HTP500-PL2	1SNA235705R0600	265
HTP500-PRINT	1SNA235716R2000	265
HTP500-PW	1SNA235709R1200	265
HTP500-ROLL	1SNA235715R2700	265
HTP500-WB	1SNA235717R2100	265
HTS500	1SNA235702R0300	265
JB10-10	1SNK910310R0000	29
JB10-2	1SNK910302R0000	29
JB10-3	1SNK910303R0000	29
JB10-4	1SNK910304R0000	29
JB10-5	1SNK910305R0000	29
JB12-2	1SNK912302R0000	30
JB12-3	1SNK912303R0000	30
JB12-5	1SNK912305R0000	30
JB16-10	1SNK916310R0000	87
JB16-2	1SNK916302R0000	87
JB16-3	1SNK916303R0000	87
JB16-4	1SNK916304R0000	87
JB16-5	1SNK916305R0000	87
JB22-10	1SNK922310R0000	89
JB22-2	1SNK922302R0000	89
JB22-3	1SNK922303R0000	89
JB22-5	1SNK922305R0000	89
JB26-10	1SNK926310R0000	90
JB26-2	1SNK926302R0000	90
JB26-3	1SNK926303R0000	90
JB26-5	1SNK926305R0000	90
JB5-10	1SNK905310R0000	21
JB5-2	1SNK905302R0000	21
JB5-3	1SNK905303R0000	21
JB5-4	1SNK905304R0000	21
JB5-5	1SNK905305R0000	21
JB5-50	1SNK905350R0000	21
JB6-10	1SNK906310R0000	24
JB6-2	1SNK906302R0000	24
JB6-3	1SNK906303R0000	24
JB6-4	1SNK906304R0000	24
JB6-5	1SNK906305R0000	24
JB6-50	1SNK906350R0000	24
JB8-10	1SNK908310R0000	27
JB8-10-R1	1SNK908910R0000	154
JB8-2	1SNK908302R0000	27
JB8-2-R1	1SNK908902R0000	154
JB8-3	1SNK908303R0000	27
JB8-3-R1	1SNK908903R0000	154
JB8-4	1SNK908304R0000	27
JB8-4-R1	1SNK908904R0000	154
JB8-5	1SNK908305R0000	27
JB85-3	1SNK900603R0000	21
JB8-5-R1	1SNK908905R0000	154
KCO	1SNK900624R0000	155
LH	1SNK900605R0000	199
LH-J	1SNK900606R0000	56
LH-R1	1SNK900607R0000	199
MC512	1SNK140000R0000	21
MC512PA	1SNK140011R0000	246
	1SNK140012R0000	248
	1SNK140021R0000	246
	1SNK140022R0000	248
	1SNK140031R0000	246
	1SNK140032R0000	248
	1SNK140041R0000	246
	1SNK140042R0000	248
	1SNK140051R0000	246
	1SNK140052R0000	248
	1SNK140061R0000	246
	1SNK140062R0000	248
	1SNK140071R0000	246
	1SNK140072R0000	248
	1SNK140081R0000	246
	1SNK140082R0000	248
	1SNK140083R0000	246
	1SNK140084R0000	248
	1SNK140091R0000	246
	1SNK140092R0000	248
	1SNK140101R0000	246
	1SNK140102R0000	248
	1SNK140111R0000	246
	1SNK140112R0000	248
	1SNK140121R0000	246
	1SNK140122R0000	248
	1SNK140131R0000	246
	1SNK140132R0000	248
	1SNK140141R0000	246
	1SNK140142R0000	248
	1SNK140151R0000	246
	1SNK140152R0000	248
	1SNK140161R0000	246
	1SNK140162R0000	248
	1SNK140171R0000	246
	1SNK140172R0000	248
	1SNK140181R0000	246
	1SNK140182R0000	248
	1SNK140191R0000	246
	1SNK140192R0000	248
	1SNK140201R0000	246
	1SNK140202R0000	248
	1SNK145011R0000	246
	1SNK145012R0000	248
	1SNK145021R0000	246
	1SNK145022R0000	248
	1SNK145031R0000	246
	1SNK145032R0000	248
	1SNK145041R0000	246
	1SNK145042R0000	248
	1SNK145051R0000	246
	1SNK145052R0000	248
	1SNK145061R0000	246
	1SNK145062R0000	248
	1SNK145071R0000	246
	1SNK145072R0000	248
	1SNK145081R0000	246
	1SNK145082R0000	248
	1SNK145091R0000	246
	1SNK145092R0000	248
	1SNK145102R0000	248
	1SNK146011R0000	246
	1SNK146012R0000	248
	1SNK146021R0000	246
	1SNK146022R0000	248
	1SNK146031R0000	246
	1SNK146032R0000	248
	1SNK146041R0000	246
	1SNK146042R0000	248
	1SNK146051R0000	246
	1SNK146052R0000	248
	1SNK146061R0000	246
	1SNK146062R0000	248
	1SNK146071R0000	246
	1SNK146072R0000	248
	1SNK146081R0000	246
	1SNK146082R0000	248
	1SNK146091R0000	246
	1SNK146092R0000	248
	1SNK146101R0000	246
	1SNK146102R0000	248
	1SNK146111R0000	246
	1SNK146112R0000	248
	1SNK146121R0000	246
	1SNK146122R0000	248
	1SNK146131R0000	246
	1SNK146132R0000	248
	1SNK146141R0000	246
	1SNK146142R0000	248
	1SNK146151R0000	246
	1SNK146152R0000	248
	1SNK146161R0000	246
	1SNK146162R0000	248
	1SNK146171R0000	246
	1SNK146172R0000	248
	1SNK146181R0000	246
	1SNK146182R0000	248
	1SNK146191R0000	246
	1SNK146192R0000	248
	1SNK146201R0000	246
	1SNK146202R0000	248
	1SNK146211R0000	246
	1SNK146212R0000	248
	1SNK146221R0000	246
	1SNK146222R0000	248
	1SNK146231R0000	246
	1SNK146232R0000	249
	1SNK146241R0000	246
	1SNK146242R0000	249
	1SNK146251R0000	246
	1SNK146252R0000	249
	1SNK146261R0000	247
	1SNK146262R0000	249
	1SNK147001R0000	247

Index
Type classification

Type	Part Number	Page
	1SNK147002R0000	249
	1SNK147011R0000	247
	1SNK147012R0000	249
	1SNK147021R0000	247
	1SNK147022R0000	249
	1SNK147031R0000	247
	1SNK147032R0000	249
	1SNK147041R0000	247
	1SNK147042R0000	249
	1SNK147051R0000	247
	1SNK147052R0000	249
	1SNK147061R0000	247
	1SNK147062R0000	249
	1SNK147071R0000	247
	1SNK147072R0000	249
	1SNK147081R0000	247
	1SNK147082R0000	249
	1SNK147091R0000	247
	1SNK147092R0000	249
	1SNK148001R0000	247
	1SNK148002R0000	249
	1SNK148011R0000	247
	1SNK148012R0000	249
	1SNK148021R0000	247
	1SNK148022R0000	249
	1SNK148031R0000	247
	1SNK148032R0000	249
	1SNK148041R0000	247
	1SNK148042R0000	249
	1SNK148051R0000	247
	1SNK148052R0000	249
	1SNK148061R0000	247
	1SNK148062R0000	249
	1SNK148071R0000	247
	1SNK148072R0000	249
	1SNK148091R0000	247
	1SNK148092R0000	249
	1SNK148101R0000	247
	1SNK148102R0000	249
	1SNK148111R0000	247
	1SNK148112R0000	249
	1SNK148121R0000	247
	1SNK148122R0000	249
	1SNK148131R0000	247
	1SNK148132R0000	249
	1SNK148141R0000	247
	1SNK148142R0000	249
	1SNK148151R0000	247
	1SNK148152R0000	249
	1SNK148161R0000	247
	1SNK148162R0000	249
	1SNK148171R0000	247
	1SNK148172R0000	249
	1SNK148181R0000	247
	1SNK148182R0000	249
	1SNK148192R0000	249
	1SNK148202R0000	249
	1SNK148212R0000	249
	1SNK148222R0000	249
	1SNK149001R0000	247
	1SNK149002R0000	249
	1SNK149011R0000	247
	1SNK149012R0000	249
	1SNK149999R0000	21
MC512-YL	1SNK140004R0000	244
MC612	1SNK150000R0000	24
MC612PA	1SNK150011R0000	252
	1SNK150012R0000	254
	1SNK150021R0000	252
	1SNK150022R0000	254
	1SNK150031R0000	252
	1SNK150032R0000	254
	1SNK150041R0000	252
	1SNK150042R0000	254
	1SNK150051R0000	252
	1SNK150052R0000	254
	1SNK150061R0000	252
	1SNK150062R0000	254
	1SNK150071R0000	252
	1SNK150072R0000	254
	1SNK150081R0000	252
	1SNK150082R0000	254
	1SNK150083R0000	252
	1SNK150084R0000	254
	1SNK150091R0000	252
	1SNK150092R0000	254
	1SNK150101R0000	252
	1SNK150102R0000	254
	1SNK150111R0000	252

Type	Part Number	Page
	1SNK150112R0000	254
	1SNK150121R0000	252
	1SNK150122R0000	254
	1SNK150131R0000	252
	1SNK150132R0000	254
	1SNK150141R0000	252
	1SNK150142R0000	254
	1SNK150151R0000	252
	1SNK150152R0000	254
	1SNK150161R0000	252
	1SNK150162R0000	254
	1SNK150171R0000	252
	1SNK150172R0000	254
	1SNK150181R0000	252
	1SNK150182R0000	254
	1SNK150191R0000	252
	1SNK150192R0000	254
	1SNK150201R0000	252
	1SNK150202R0000	254
	1SNK155011R0000	252
	1SNK155012R0000	254
	1SNK155021R0000	252
	1SNK155022R0000	254
	1SNK155031R0000	252
	1SNK155032R0000	254
	1SNK155041R0000	252
	1SNK155042R0000	254
	1SNK155051R0000	252
	1SNK155052R0000	254
	1SNK155061R0000	252
	1SNK155062R0000	254
	1SNK155071R0000	252
	1SNK155072R0000	254
	1SNK155081R0000	252
	1SNK155082R0000	254
	1SNK155091R0000	252
	1SNK155092R0000	254
	1SNK155102R0000	254
	1SNK156011R0000	252
	1SNK156012R0000	254
	1SNK156021R0000	252
	1SNK156022R0000	254
	1SNK156031R0000	252
	1SNK156032R0000	254
	1SNK156041R0000	252
	1SNK156042R0000	254
	1SNK156051R0000	252
	1SNK156052R0000	254
	1SNK156061R0000	252
	1SNK156062R0000	254
	1SNK156071R0000	252
	1SNK156072R0000	254
	1SNK156081R0000	252
	1SNK156082R0000	254
	1SNK156091R0000	252
	1SNK156092R0000	254
	1SNK156101R0000	252
	1SNK156102R0000	254
	1SNK156111R0000	252
	1SNK156112R0000	254
	1SNK156121R0000	252
	1SNK156122R0000	254
	1SNK156131R0000	252
	1SNK156132R0000	254
	1SNK156141R0000	252
	1SNK156142R0000	254
	1SNK156151R0000	252
	1SNK156152R0000	254
	1SNK156161R0000	252
	1SNK156162R0000	254
	1SNK156171R0000	252
	1SNK156172R0000	254
	1SNK156181R0000	252
	1SNK156182R0000	254
	1SNK156191R0000	252
	1SNK156192R0000	254
	1SNK156201R0000	252
	1SNK156202R0000	254
	1SNK156211R0000	252
	1SNK156212R0000	254
	1SNK156221R0000	252
	1SNK156222R0000	254
	1SNK156231R0000	252
	1SNK156232R0000	254
	1SNK156241R0000	253
	1SNK156242R0000	254
	1SNK156251R0000	253
	1SNK156252R0000	255
	1SNK156261R0000	253

Type	Part Number	Page
	1SNK156262R0000	255
	1SNK157001R0000	253
	1SNK157002R0000	255
	1SNK157011R0000	253
	1SNK157012R0000	255
	1SNK157021R0000	253
	1SNK157022R0000	255
	1SNK157031R0000	253
	1SNK157032R0000	255
	1SNK157041R0000	253
	1SNK157042R0000	255
	1SNK157051R0000	253
	1SNK157052R0000	255
	1SNK157061R0000	253
	1SNK157062R0000	255
	1SNK157071R0000	253
	1SNK157072R0000	255
	1SNK157081R0000	253
	1SNK157082R0000	255
	1SNK157091R0000	253
	1SNK157092R0000	255
	1SNK158001R0000	253
	1SNK158002R0000	255
	1SNK158011R0000	253
	1SNK158012R0000	255
	1SNK158021R0000	253
	1SNK158022R0000	255
	1SNK158031R0000	253
	1SNK158032R0000	255
	1SNK158041R0000	253
	1SNK158042R0000	255
	1SNK158051R0000	253
	1SNK158052R0000	255
	1SNK158061R0000	253
	1SNK158062R0000	255
	1SNK158071R0000	253
	1SNK158072R0000	255
	1SNK158091R0000	253
	1SNK158092R0000	255
	1SNK158101R0000	253
	1SNK158102R0000	255
	1SNK158111R0000	253
	1SNK158112R0000	255
	1SNK158121R0000	253
	1SNK158122R0000	255
	1SNK158131R0000	253
	1SNK158132R0000	255
	1SNK158141R0000	253
	1SNK158142R0000	255
	1SNK158151R0000	253
	1SNK158152R0000	255
	1SNK158161R0000	253
	1SNK158162R0000	255
	1SNK158171R0000	253
	1SNK158172R0000	255
	1SNK158181R0000	253
	1SNK158182R0000	255
	1SNK158192R0000	255
	1SNK158202R0000	255
	1SNK158212R0000	255
	1SNK158222R0000	255
	1SNK159001R0000	253
	1SNK159002R0000	255
	1SNK159011R0000	253
	1SNK159012R0000	255
	1SNK159999R0000	24
MC612-YL	1SNK150004R0000	250
MC812	1SNK160000R0000	30
MC812PA	1SNK160011R0000	257
	1SNK160012R0000	259
	1SNK160021R0000	257
	1SNK160022R0000	259
	1SNK160031R0000	257
	1SNK160032R0000	259
	1SNK160041R0000	257
	1SNK160042R0000	259
	1SNK160051R0000	257
	1SNK160052R0000	259
	1SNK160061R0000	257
	1SNK160062R0000	259
	1SNK160071R0000	257
	1SNK160072R0000	259
	1SNK160081R0000	257
	1SNK160082R0000	259
	1SNK160083R0000	257
	1SNK160084R0000	259
	1SNK160091R0000	257
	1SNK160092R0000	259
	1SNK160101R0000	257

Index_1SNK160027C0206

Index
Type classification

Type	Part Number	Page
	1SNK160102R0000	259
	1SNK160111R0000	257
	1SNK160112R0000	259
	1SNK160121R0000	257
	1SNK160122R0000	259
	1SNK160131R0000	257
	1SNK160132R0000	259
	1SNK160141R0000	257
	1SNK160142R0000	259
	1SNK160151R0000	257
	1SNK160152R0000	259
	1SNK160161R0000	257
	1SNK160162R0000	259
	1SNK160171R0000	257
	1SNK160172R0000	259
	1SNK160181R0000	257
	1SNK160182R0000	259
	1SNK160191R0000	257
	1SNK160192R0000	259
	1SNK160201R0000	257
	1SNK160202R0000	259
	1SNK165011R0000	257
	1SNK165012R0000	259
	1SNK165021R0000	257
	1SNK165022R0000	259
	1SNK165031R0000	257
	1SNK165032R0000	259
	1SNK165041R0000	257
	1SNK165042R0000	259
	1SNK165051R0000	257
	1SNK165052R0000	259
	1SNK165061R0000	257
	1SNK165062R0000	259
	1SNK165071R0000	257
	1SNK165072R0000	259
	1SNK165081R0000	257
	1SNK165082R0000	259
	1SNK165091R0000	257
	1SNK165092R0000	259
	1SNK165102R0000	259
	1SNK166011R0000	257
	1SNK166012R0000	259
	1SNK166021R0000	257
	1SNK166022R0000	259
	1SNK166031R0000	257
	1SNK166032R0000	259
	1SNK166041R0000	257
	1SNK166042R0000	259
	1SNK166051R0000	257
	1SNK166052R0000	259
	1SNK166061R0000	257
	1SNK166062R0000	259
	1SNK166071R0000	257
	1SNK166072R0000	259
	1SNK166081R0000	257
	1SNK166082R0000	259
	1SNK166091R0000	257
	1SNK166092R0000	259
	1SNK166101R0000	257
	1SNK166102R0000	259
	1SNK166111R0000	257
	1SNK166112R0000	259
	1SNK166121R0000	257
	1SNK166122R0000	259
	1SNK166131R0000	257
	1SNK166132R0000	259
	1SNK166141R0000	257
	1SNK166142R0000	259
	1SNK166151R0000	257
	1SNK166152R0000	259
	1SNK166161R0000	257
	1SNK166162R0000	259
	1SNK166171R0000	257
	1SNK166172R0000	259
	1SNK166181R0000	257
	1SNK166182R0000	259
	1SNK166191R0000	257
	1SNK166192R0000	259
	1SNK166201R0000	257
	1SNK166202R0000	259
	1SNK166211R0000	257
	1SNK166212R0000	259
	1SNK166221R0000	257
	1SNK166222R0000	259
	1SNK166231R0000	258
	1SNK166232R0000	260
	1SNK166241R0000	258
	1SNK166242R0000	260
	1SNK166251R0000	258

Type	Part Number	Page
	1SNK166252R0000	260
	1SNK166261R0000	258
	1SNK166262R0000	260
	1SNK167001R0000	258
	1SNK167002R0000	260
	1SNK167011R0000	258
	1SNK167012R0000	260
	1SNK167021R0000	258
	1SNK167022R0000	260
	1SNK167031R0000	258
	1SNK167032R0000	260
	1SNK167041R0000	258
	1SNK167042R0000	260
	1SNK167051R0000	258
	1SNK167052R0000	260
	1SNK167061R0000	258
	1SNK167062R0000	260
	1SNK167071R0000	258
	1SNK167072R0000	260
	1SNK167081R0000	258
	1SNK167082R0000	260
	1SNK167091R0000	258
	1SNK167092R0000	260
	1SNK168001R0000	258
	1SNK168002R0000	260
	1SNK168011R0000	258
	1SNK168012R0000	260
	1SNK168021R0000	258
	1SNK168022R0000	260
	1SNK168031R0000	258
	1SNK168032R0000	260
	1SNK168041R0000	258
	1SNK168042R0000	260
	1SNK168051R0000	258
	1SNK168052R0000	260
	1SNK168061R0000	258
	1SNK168062R0000	260
	1SNK168071R0000	258
	1SNK168072R0000	260
	1SNK168091R0000	258
	1SNK168092R0000	260
	1SNK168101R0000	258
	1SNK168102R0000	260
	1SNK168111R0000	258
	1SNK168112R0000	260
	1SNK168121R0000	258
	1SNK168122R0000	260
	1SNK168131R0000	258
	1SNK168132R0000	260
	1SNK168141R0000	258
	1SNK168142R0000	260
	1SNK168151R0000	258
	1SNK168152R0000	260
	1SNK168161R0000	258
	1SNK168162R0000	260
	1SNK168171R0000	258
	1SNK168172R0000	260
	1SNK168181R0000	258
	1SNK168182R0000	260
	1SNK168192R0000	260
	1SNK168202R0000	260
	1SNK168212R0000	260
	1SNK168222R0000	260
	1SNK169001R0000	258
	1SNK169002R0000	260
	1SNK169011R0000	258
	1SNK169012R0000	260
	1SNK169999R0000	30
MC812-YL	1SNK160004R0000	256
MCLH	1SNK900630R0000	201
MCLH-R1	1SNK900631R0000	201
MCLH-R1-YL	1SNK900634R0000	201
MCLH-YL	1SNK900633R0000	201
MG2-ABM 991012	1SNB991012R0000	266
MG2-CKP 991670	1SNB991670R0000	266
MG2-CTB 991006	1SNB991006R0000	266
MG2-ETB 991016	1SNB991016R0000	244
MG2-ETR 991600	1SNB991600R0000	266
MG2-ETR 991601	1SNB991601R0000	266
MG2-ETR 991602	1SNB991602R0000	266
MG2-ETR 991603	1SNB991603R0000	266
MG2-ETR 991606	1SNB991606R0000	266
MG2-LTB 991013	1SNB991013R0000	266
MG2-MTB 991008	1SNB991008R0000	266
MG2-PLT 991002	1SNB991002R0000	266
MG2-PTD 991007	1SNB991007R0000	266
MG2-PTM 991010	1SNB991010R0000	261
MG2-PWC 991000	1SNB991000R0000	266
MG2-QTB 991011	1SNB991011R0000	266

Type	Part Number	Page
MG2-STB 991005	1SNB991005R0000	266
MG2-TCT 991562	1SNB991562R0000	266
MG2-TDMO-01 40340	1SNB040340R0412	261
MG2-TDMO-01 40341	1SNB040341R0416	261
MG2-TDMO-01 40390	1SNB040390R0412	261
MG2-TDMO-01 40391	1SNB040391R0416	261
MG2-TDMO-02 40440	1SNB040440R0412	261
MG2-TDMO-02 40441	1SNB040441R0416	261
MG2-TDMO-02 40490	1SNB040490R0412	261
MG2-TDMO-02 40491	1SNB040491R0416	261
MG2-TDMO-03 40540	1SNB040540R0412	261
MG2-TDMO-03 40541	1SNB040541R0416	261
MG2-TDMO-03 40590	1SNB040590R0412	261
MG2-TDMO-03 40591	1SNB040591R0416	261
MG2-TGT 991532	1SNB991532R0000	266
MG2-TLT 991522	1SNB991522R0000	266
MG2-TMT 991513	1SNB991513R0000	266
MG2-TST 991552	1SNB991552R0000	266
MG2-TTB 991512	1SNB991512R0000	266
MG2-TTD 991563	1SNB991563R0000	266
MG2-TWC 991502	1SNB991502R0000	266
MG2-TWT 991542	1SNB991542R0000	266
MG2-WTB 991004	1SNB991004R0000	266
MG3 KIT	1SNB419001R0000	244
MG-CPM 13 41740	1SNB041740R0512	244
MG-CPM 13 41741	1SNB041741R0612	250
MG-CPM 13 41790	1SNB041790R0512	21
MG-CPM 13 41791	1SNB041791R0612	30
MG-CPMFA 43196	1SNB043196R0012	185
MG-TAA 49148	1SNB049148R1735	201
MG-TAA 49198	1SNB049198R1735	201
MG-TAA 49448	1SNB049448R8530	201
MG-TAA 49498	1SNB049498R8530	201
MG-TAPW 49046	1SNB049046R0929	263
MG-TAPW 49096	1SNB049096R0929	263
MG-TAR 45194	1SNB045194R1735	201
MG-TAR 45490	1SNB045490R8530	201
MG-VYT 46415	1SNB046415R0615	217
MG-VYT 46915	1SNB046915R0615	217
PAM43020	1SNA235106R2600	230
PC5-10	1SNA113544R1200	105
PC5-2	1SNA113542R1000	105
PC8-10	1SNA163313R2400	155
PC81-10	1SNA173523R1100	120
PC8-2	1SNA116538R1700	226
PC8-3	1SNA116539R1000	226
PC8-4	1SNA116540R2500	226
PC8-R1	1SNA400711R0600	153
PC8-R2	1SNA400712R0700	155
PC8-R3	1SNA400713R0000	155
PC8-R4	1SNA400724R0300	155
PC8-R5	1SNA400842R0000	155
PC8-R6	1SNA400843R0000	155
PC8-R7	1SNA400849R0000	155
PC8-R8	1SNA400850R0000	155
PEN HOLDER	1SNA360098R1200	268
PG5	1SNK900401R0000	52
PG5-R1	1SNK900402R0000	52
PG5-R2	1SNK900403R0000	211
PIB2-TT	1SNA235155R2600	201
PIB2-TT-YL	1SNA235157R2000	201
PL10	1SNK900621R0000	85
PL16	1SNK900622R0000	87
PL5	1SNK900618R0000	80
PL6	1SNK900619R0000	81
PL8	1SNK900620R0000	84
PR3.G2	1SNA164800R0300	197
PR3.Z2	1SNA174300R1700	196
PR30	1SNA173220R0500	196
PR4	1SNA168500R1200	198
PR5	1SNA168700R2200	198
PR50	1SNA178529R0400	197
PS-3	1SNK900650R0000	213
PT-3	1SNK900625R0000	210
PT-ZD	1SNK900660R0000	185
RC1010	1SNA238000R1600	91
RCPEAD-TT	1SNA235158R0100	201
RCPEAD-TT-YL	1SNA235159R0200	201
RCPEB	1SNA178430R0500	201
RIB-B	1SNA235710R0600	265
RIB-R	1SNA235711R2300	265
RIB-RS	1SNA235718R0200	265
RILS	1SNK900627R0000	219
SC-JB8-2	1SNK900652R0000	152
SC-JB8-3	1SNK900653R0000	156
SC-JB8-3-OR	1SNK900657R0000	231
SC-JB8-4	1SNK900654R0000	156
SC-JB8-4-OR	1SNK900658R0000	231
SC-JB8-5	1SNK900655R0000	231

Index
Type classification

Type	Part Number	Page
SERVICE KIT FOR AMS 500	1SNA360162R1600	268
SHB	1SNK900602R0000	56
SHBP	1SNK900601R0000	21
SHBS	1SNK900600R0000	80
SPDST1	1SNA360163R1700	268
SPRC 1	1SNA360010R1500	268
SPRC 10	1SNA360020R1700	268
SPRC 11	1SNA360021R0400	268
SPRC 13	1SNA360023R0600	268
SPRC 14	1SNA360024R0700	268
SPRC 15	1SNA360025R0000	268
SPRC 16	1SNA360026R0100	268
SPRC 2	1SNA360011R1500	268
SPRC 21	1SNA360031R0600	264
SPRC 26	1SNA360036R0300	268
SPRC 27	1SNA360037R0400	268
SPRC 28	1SNA360040R2300	268
SPRC 29	1SNA360038R1500	268
SPRC 30-3	1SNA360039R1700	245
SPRC 4	1SNA360014R0500	268
SPRC 5	1SNA360015R0600	268
SPRC 6	1SNA360016R0700	268
SPRC 7	1SNA360017R0000	268
SPRC 8	1SNA360018R1100	268
SPRC 9	1SNA360019R1200	268
TC5	1SNK900200R0000	21
TC5-R1	1SNK900201R0000	21
TGA8	1SNA168672R1100	120
	1SNA168673R1200	120
	1SNA168674R1300	120
TO3.5-100-INS	1SNK900644R0000	213
TO3.5-50	1SNK900640R0000	213
TO3.5-50-A	1SNK900659R0000	213
TO4-100	1SNK900641R0000	213
TO5.5-125	1SNK900642R0000	213
TO6.5-150	1SNK900643R0000	213
TP2	1SNK900203R0000	30
TP4	1SNK900205R0000	30
UMH	1SNK900611R0000	30
VR-ZD	1SNK900637R0000	185
ZD2.5-11	1SNK805016R0000	172
ZD2.5-22	1SNK805017R0000	173
ZD2.5-22-PE	1SNK805156R0000	174
ZDK2.5-11	1SNK805015R0000	175
ZDK2.5-11-BL	1SNK805025R0000	175
ZDK2.5-11-PE	1SNK805150R0000	179
ZDK2.5-21	1SNK805014R0000	176
ZDK2.5-22	1SNK805010R0000	177
ZDK2.5-22-BL	1SNK805020R0000	177
ZDK2.5-22-PE	1SNK805152R0000	180
ZDK2.5-D1	1SNK805214R0000	182
ZDK2.5-D1-PE	1SNK805250R0000	184
ZDK2.5-D2	1SNK805213R0000	181
ZDK2.5-D2-BL	1SNK805223R0000	181
ZDK2.5-D2-PE	1SNK805212R0000	183
ZDK4-22	1SNK806010R0000	178
ZDS4-22	1SNK805013R0000	190
ZDS4-22-R1	1SNK806013R0000	192
ZK10	1SNK710010R0000	29
ZK10-3P	1SNK710011R0000	31
ZK10-3P-BL	1SNK710021R0000	31
ZK10-3P-PV	1SNK710064R0000	32
ZK10-3P-PV-BL	1SNK710067R0000	32
ZK10-BL	1SNK710020R0000	29
ZK10-OR	1SNK710030R0000	29
ZK10-PE	1SNK710150R0000	30
ZK10-PE-3P	1SNK710151R0000	32
ZK10-PV	1SNK710063R0000	30
ZK10-PV-BL	1SNK710065R0000	30
ZK16	1SNK712010R0000	33
ZK16-3P	1SNK712011R0000	35
ZK16-3P-BL	1SNK712021R0000	35
ZK16-3P-PV	1SNK712064R0000	36
ZK16-3P-PV-BL	1SNK712067R0000	36
ZK16-BL	1SNK712020R0000	33
ZK16-PE	1SNK712150R0000	34
ZK16-PE-3P	1SNK712151R0000	36
ZK16-PV	1SNK712063R0000	34
ZK16-PV-BL	1SNK712065R0000	34
ZK2.5	1SNK705010R0000	21
ZK2.5-3P	1SNK705011R0000	22
ZK2.5-3P-BK	1SNK705073R0000	22
ZK2.5-3P-BL	1SNK705021R0000	22
ZK2.5-3P-GN	1SNK705068R0000	22
ZK2.5-3P-OR	1SNK705031R0000	22
ZK2.5-3P-RD	1SNK705069R0000	22
ZK2.5-3P-WH	1SNK705072R0000	22
ZK2.5-3P-YL	1SNK705067R0000	22
ZK2.5-4P	1SNK705012R0000	23
ZK2.5-4P-BK	1SNK705080R0000	23
ZK2.5-4P-BL	1SNK705022R0000	23
ZK2.5-4P-GN	1SNK705075R0000	23
ZK2.5-4P-OR	1SNK705032R0000	23
ZK2.5-4P-RD	1SNK705076R0000	23
ZK2.5-4P-WH	1SNK705079R0000	23
ZK2.5-4P-YL	1SNK705074R0000	23
ZK2.5-BK	1SNK705066R0000	21
ZK2.5-BL	1SNK705020R0000	21
ZK2.5-CH-4P-LR	1SNK705710R0000	65
ZK2.5-CH-4P-RL	1SNK705711R0000	66
ZK2.5-D1	1SNK705211R0000	57
ZK2.5-D1-PE	1SNK705250R0000	56
ZK2.5-D2	1SNK705210R0000	56
ZK2.5-D2-BL	1SNK705220R0000	56
ZK2.5-D2-PE	1SNK705212R0000	58
ZK2.5-D-CH2-DU-RL	1SNK705219R0000	69
ZK2.5-D-CH-DU	1SNK705214R0000	68
ZK2.5-D-CH-UD	1SNK705213R0000	67
ZK2.5-GN	1SNK705061R0000	21
ZK2.5-L-L-PE	1SNK705512R0000	62
ZK2.5-L-N-PE	1SNK705513R0000	63
ZK2.5-OR	1SNK705030R0000	21
ZK2.5-PE	1SNK705150R0000	21
ZK2.5-PE-3P	1SNK705151R0000	22
ZK2.5-PE-4P	1SNK705152R0000	23
ZK2.5-RD	1SNK705062R0000	21
ZK2.5-S	1SNK705310R0000	49
ZK2.5-S-4P	1SNK705312R0000	50
ZK2.5-S-4P-BL	1SNK705321R0000	50
ZK2.5-S-4P-OR	1SNK705331R0000	50
ZK2.5-S-BL	1SNK705320R0000	49
ZK2.5-SF	1SNK706410R0000	51
ZK2.5-SF-R1	1SNK706411R0000	55
ZK2.5-SF-R3	1SNK706412R0000	55
ZK2.5-S-OR	1SNK705330R0000	49
ZK2.5-SP	1SNK705311R0000	52
ZK2.5-SP-4P	1SNK705313R0000	53
ZK2.5-S-R1	1SNK706310R0000	51
ZK2.5-T1	1SNK705511R0000	61
ZK2.5-T1-PE	1SNK705550R0000	60
ZK2.5-T3	1SNK705510R0000	60
ZK2.5-WH	1SNK705065R0000	21
ZK2.5-YL	1SNK705060R0000	21
ZK4	1SNK706010R0000	24
ZK4-3P	1SNK706011R0000	25
ZK4-3P-BL	1SNK706021R0000	25
ZK4-3P-OR	1SNK706031R0000	25
ZK4-4P	1SNK706012R0000	26
ZK4-4P-BL	1SNK706022R0000	26
ZK4-4P-OR	1SNK706032R0000	26
ZK4-BK	1SNK706066R0000	24
ZK4-BL	1SNK706020R0000	24
ZK4-OR	1SNK706030R0000	24
ZK4-PE	1SNK706150R0000	24
ZK4-PE-3P	1SNK706151R0000	25
ZK4-PE-4P	1SNK706152R0000	26
ZK4-RD	1SNK706062R0000	24
ZK4-YL	1SNK706060R0000	24
ZK6	1SNK708010R0000	27
ZK6-3P	1SNK708011R0000	28
ZK6-3P-BL	1SNK708021R0000	28
ZK6-3P-OR	1SNK708031R0000	28
ZK6-BK	1SNK708066R0000	27
ZK6-BL	1SNK708020R0000	27
ZK6-OR	1SNK708030R0000	27
ZK6-PE	1SNK708150R0000	27
ZK6-PE-3P	1SNK708151R0000	28
ZK6-RD	1SNK708062R0000	27
ZK6-YL	1SNK708060R0000	27
ZS10	1SNK508010R0000	84
ZS10-BK	1SNK508066R0000	84
ZS10-BL	1SNK508020R0000	84
ZS10-BR	1SNK508064R0000	84
ZS10-GN	1SNK508061R0000	84
ZS10-OR	1SNK508030R0000	84
ZS10-PE	1SNK508150R0000	84
ZS10-PE-R1	1SNK508151R0000	153
ZS10-PR	1SNK508063R0000	84
ZS10-R1	1SNK508011R0000	152
ZS10-RD	1SNK508062R0000	84
ZS10-S	1SNK508315R0000	111
ZS10-S-BL	1SNK508320R0000	111
ZS10-SF	1SNK508418R0000	133
ZS10-SF-R1	1SNK508421R0000	134
ZS10-SF-R3	1SNK508422R0000	134
ZS10-SP	1SNK508316R0000	116
ZS10-S-R2	1SNK508417R0000	135
ZS10-ST	1SNK508310R0000	154
ZS10-ST-1	1SNK508312R0000	152
ZS10-ST-T4	1SNK508311R0000	152
ZS10-WH	1SNK508065R0000	84
ZS10-YL	1SNK508060R0000	84
ZS150	1SNK531010R0000	91
ZS150-BL	1SNK531020R0000	91
ZS150-YL	1SNK531060R0000	91
ZS16	1SNK510010R0000	85
ZS16-BL	1SNK510020R0000	85
ZS16-OR	1SNK510030R0000	85
ZS16-PE	1SNK510150R0000	85
ZS240	1SNK536010R0000	92
ZS240-BL	1SNK536020R0000	92
ZS240-YL	1SNK536060R0000	92
ZS25	1SNK512010R0000	86
ZS25-BL	1SNK512020R0000	86
ZS25-PE	1SNK512150R0000	86
ZS25-YL	1SNK512060R0000	86
ZS35	1SNK516010R0000	87
ZS35-BL	1SNK516020R0000	87
ZS35-OR	1SNK516030R0000	87
ZS35-PE	1SNK516150R0000	87
ZS35-PEN	1SNK516170R0000	101
ZS4	1SNK505010R0000	80
ZS4-BK	1SNK505066R0000	80
ZS4-BL	1SNK505020R0000	80
ZS4-BR	1SNK505064R0000	80
ZS4-D1	1SNK505211R0000	137
ZS4-D2	1SNK505210R0000	136
ZS4-D2-BL	1SNK505220R0000	136
ZS4-D2-OR	1SNK505230R0000	136
ZS4-D2-S	1SNK505315R0000	142
ZS4-D2-SF1	1SNK508425R0000	144
ZS4-D2-SF1-R1	1SNK508423R0000	145
ZS4-D2-SF1-R3	1SNK508424R0000	145
ZS4-D2-S-T2	1SNK505316R0000	143
ZS4-D-CH-DU	1SNK505215R0000	149
ZS4-D-CH-UD	1SNK505214R0000	148
ZS4-GN	1SNK505061R0000	80
ZS4-OR	1SNK505030R0000	80
ZS4-PE	1SNK505150R0000	80
ZS4-PE-R2	1SNK506153R0000	131
ZS4-PR	1SNK505063R0000	80
ZS4-R1	1SNK508013R0000	124
ZS4-R2	1SNK506013R0000	130
ZS4-RD	1SNK505062R0000	80
ZS4-S	1SNK505310R0000	105
ZS4-S-BL	1SNK505320R0000	105
ZS4-SF	1SNK506410R0000	126
ZS4-SF1	1SNK508410R0000	120
ZS4-SF1-OR	1SNK508430R0000	120
ZS4-SF1-R1	1SNK508412R0000	122
ZS4-SF1-R2	1SNK508413R0000	123
ZS4-SF1-R3	1SNK508414R0000	122
ZS4-SF1-R4	1SNK508415R0000	123
ZS4-SF1-T2	1SNK508411R0000	121
ZS4-SF-R1	1SNK506412R0000	128
ZS4-SF-R2	1SNK506413R0000	129
ZS4-SF-R3	1SNK506415R0000	128
ZS4-SF-R4	1SNK506416R0000	129
ZS4-SF-T2	1SNK506411R0000	127
ZS4-S-OR	1SNK505330R0000	105
ZS4-SP	1SNK505313R0000	112
ZS4-SP-R1	1SNK506313R0000	114
ZS4-SP-T2	1SNK505314R0000	113
ZS4-SP-T2-R1	1SNK506314R0000	115
ZS4-S-R1	1SNK506310R0000	107
ZS4-S-R1-BL	1SNK506320R0000	107
ZS4-S-R1-OR	1SNK506330R0000	107
ZS4-S-R2	1SNK506414R0000	132
ZS4-S-R3	1SNK508416R0000	125
ZS4-S-R3-T2	1SNK508419R0000	125
ZS4-S-T2	1SNK505311R0000	106
ZS4-S-T2.3	1SNK505312R0000	106
ZS4-S-T2.3-R1	1SNK506312R0000	108
ZS4-S-T2-BL	1SNK505321R0000	106
ZS4-S-T2-OR	1SNK505331R0000	106
ZS4-S-T2-R1	1SNK506311R0000	108
ZS4-S-T2-R1-BL	1SNK506321R0000	108
ZS4-S-T2-R1-OR	1SNK506331R0000	108
ZS4-T3	1SNK505212R0000	146
ZS4-T3-R1	1SNK506213R0000	147
ZS4-WH	1SNK505065R0000	80
ZS4-YL	1SNK505060R0000	80
ZS50	1SNK516011R0000	88
ZS50-BK	1SNK516064R0000	88
ZS50-BL	1SNK516021R0000	88
ZS50-PE	1SNK516151R0000	88
ZS50-RD	1SNK516063R0000	88

Index
Type classification

Type	Part Number	Page
ZS50-YL	1SNK516060R0000	88
ZS6	1SNK506010R0000	81
ZS6-3S	1SNK506011R0000	82
ZS6-3S-BL	1SNK506021R0000	82
ZS6-3S-PE	1SNK506151R0000	82
ZS6-3S-YL	1SNK506067R0000	82
ZS6-4S	1SNK506012R0000	83
ZS6-4S-BL	1SNK506022R0000	83
ZS6-4S-PE	1SNK506152R0000	83
ZS6-4S-YL	1SNK506068R0000	83
ZS6-BK	1SNK506066R0000	81
ZS6-BL	1SNK506020R0000	81
ZS6-BR	1SNK506064R0000	81
ZS6-D1	1SNK506211R0000	139
ZS6-D1-PE	1SNK506250R0000	138
ZS6-D1-RD	1SNK506214R0000	139
ZS6-D2	1SNK506210R0000	138
ZS6-D2-BK	1SNK506266R0000	138
ZS6-D2-BL	1SNK506220R0000	138
ZS6-D2-OR	1SNK506230R0000	138
ZS6-D2-PE	1SNK506212R0000	140
ZS6-D2-RD	1SNK506262R0000	138
ZS6-D2-WH	1SNK506265R0000	138
ZS6-D2-YL	1SNK506260R0000	138
ZS6-GN	1SNK506061R0000	81
ZS6-OR	1SNK506030R0000	81
ZS6-PE	1SNK506150R0000	81
ZS6-PR	1SNK506063R0000	81
ZS6-RD	1SNK506062R0000	81
ZS6-S	1SNK506315R0000	109
ZS6-S-4S-T2	1SNK506316R0000	110
ZS6-S-BL	1SNK506322R0000	109
ZS6-WH	1SNK506065R0000	81
ZS6-YL	1SNK506060R0000	81
ZS70	1SNK522010R0000	89
ZS70-BL	1SNK522020R0000	89
ZS70-PE	1SNK522150R0000	89
ZS70-YL	1SNK522060R0000	89
ZS95	1SNK526010R0000	90
ZS95-BL	1SNK526020R0000	90
ZS95-PE	1SNK526150R0000	90
ZS95-YL	1SNK526060R0000	90

Notes

LET'S CONNECT

We make it easy to connect with our experts and are ready to provide all the support you need. For additional information or product assistance, please contact your field representative or our customer service department. Additional information is also available on the website http://www.te.com/entrelec.

TECHNICAL SUPPORT

te.com/support-center

Asia:
+86 400-820-6015

Europe, Middle East, & Africa:
+49 6251-133-0

North America:
+1-888-441-9982

te.com

ENTRELEC, TE Connectivity, TE Connectivity (logo) and Every Connection Counts are trademarks. All other logos, products and/or company names referred to herein might be trademarks of their respective owners.

All other logos, products and/or company names referred to herein might be trademarks of their respective owners.

The information given herein, including drawings, illustrations and schematics which are intended for illustration purposes only, is believed to be reliable. However, TE Connectivity makes no warranties as to its accuracy or completeness and disclaims any liability in connection with its use. TE Connectivity's obligations shall only be as set forth in TE Connectivity's Standard Terms and Conditions of Sale for this product and in no case will TE Connectivity be liable for any incidental, indirect or consequential damages arising out of the sale, resale, use or misuse of the product. Users of TE Connectivity products should make their own evaluation to determine the suitability of each such product for the specific application.

© 2018 TE Connectivity Ltd. family of companies All Rights Reserved.

1-1773957-4_EN **02/19**

TE Connectivity

3, rue Jean Perrin
69687 Chassieu cedex
France

Tel: +33 472172222

www.te.com/